Generated by Foxit PDF Creator © Foxit Software
http://www.foxitsoftware.com For evaluation only.

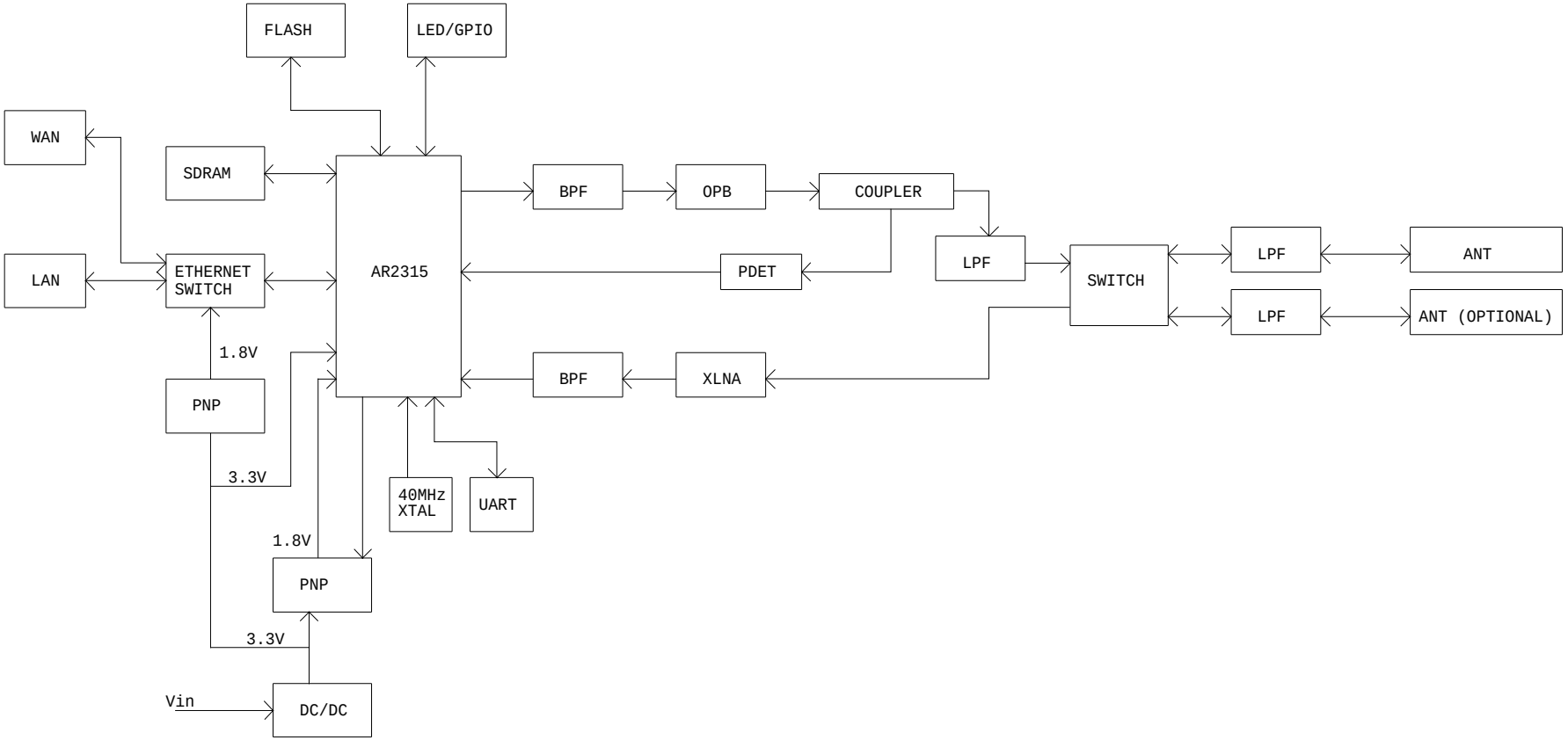

Generated by Foxit PDF Creator © Foxit Software
http://www.foxitsoftware.com For evaluation only.

AP- AR2315 BASED,

802.11b/g BRIDGE

DATE	REVISION NUMBER	Page	DESCRIPTION
2007/03/09	Revision 01		Initial release.

Generated by Foxit PDF Creator © Foxit Software
http://www.foxitsoftware.com For evaluation only.

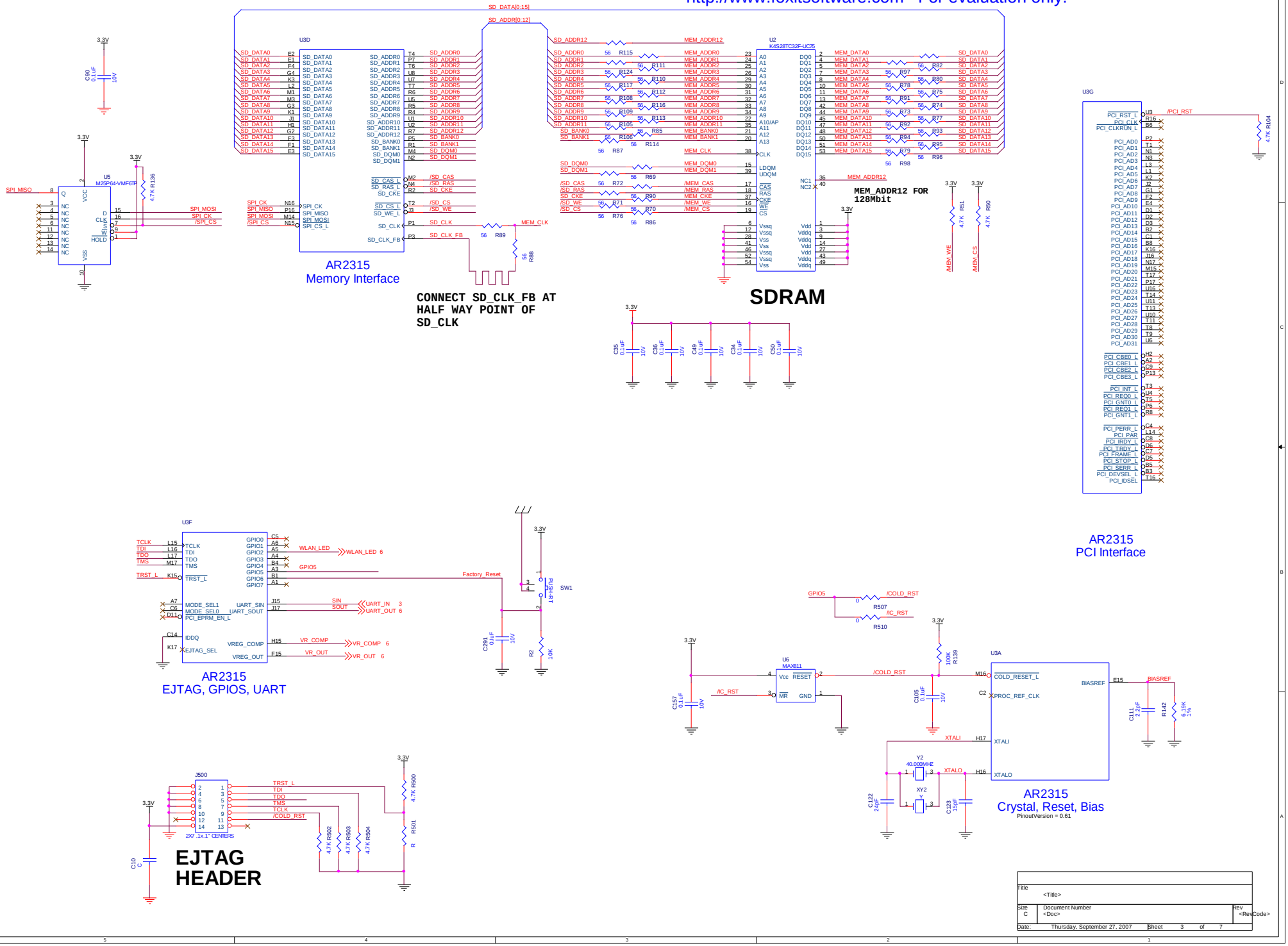

Title	<Title>		
Size C	Document Number <Doc>		Rev <RevCode>
Date: Thursday, September 27, 2007	Sheet 3	of 7	

Generated by Foxit PDF Creator © Foxit Software
http://www.foxitsoftware.com For evaluation only.

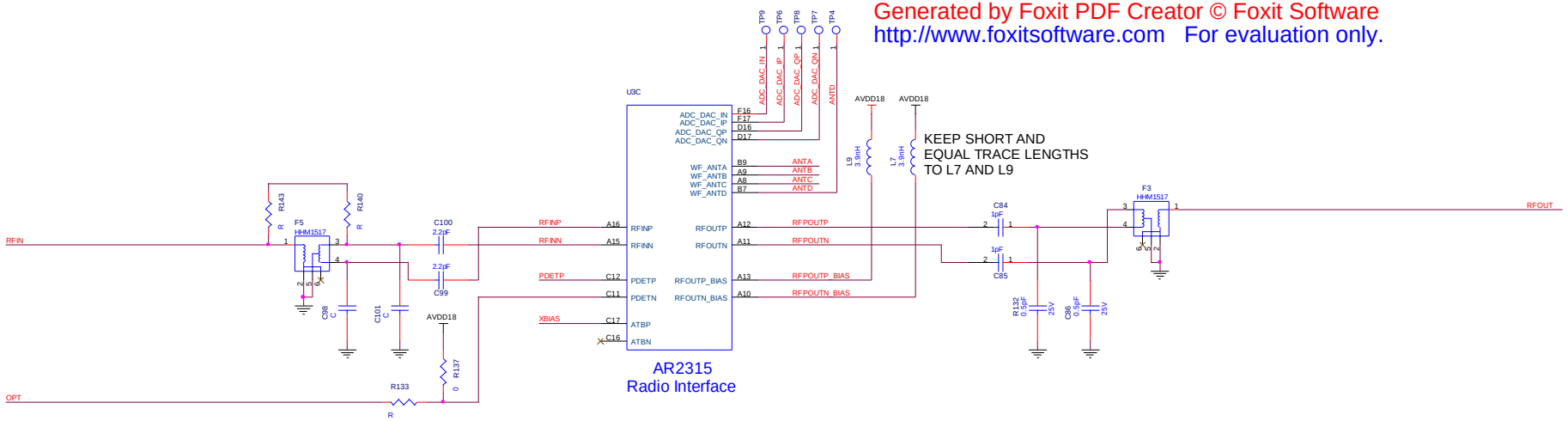

ATHEROS CONFIDENTIAL
PRELIMINARY

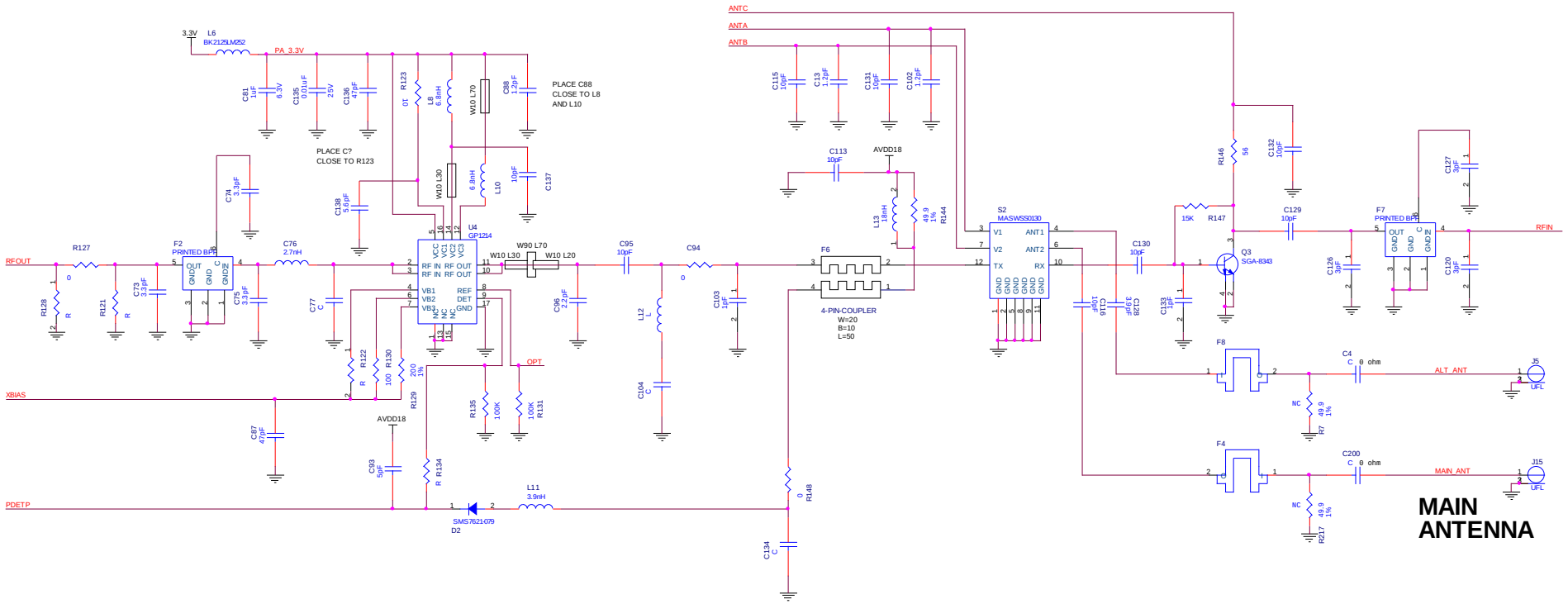

Title	<Title>		
Size C	Document Number <Doc>		Rev <RevCode>
Date: Thursday, September 27, 2007	Sheet 4	of 7	

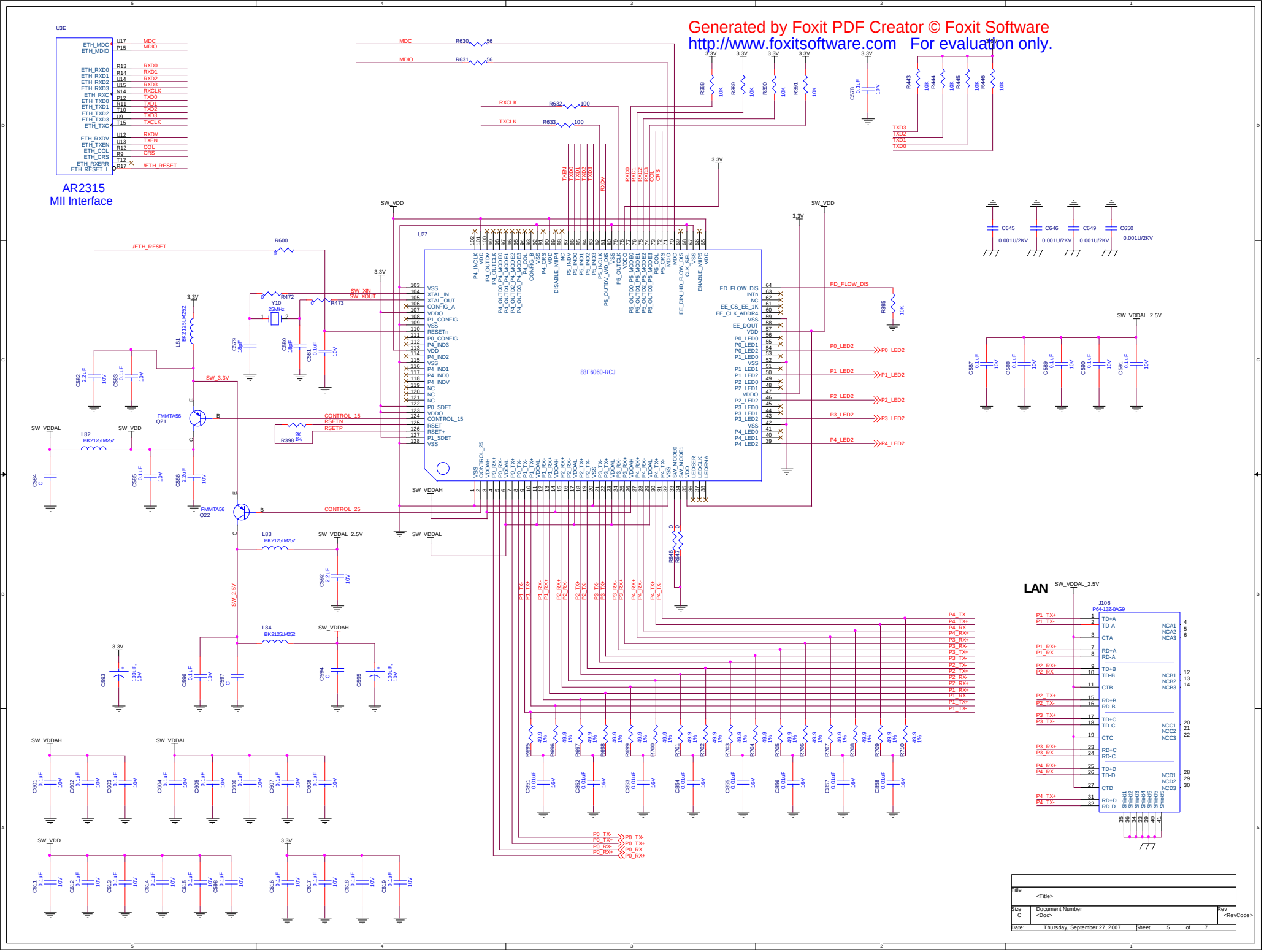

Generated by Foxit PDF Creator © Foxit Software
http://www.foxitsoftware.com For evaluation only.
AR2315
MII Interface
U3E
U27
88E6060-RCJ
LAN
J106
P64-13Z-0AG9
Title
<Title>
Size
C
Document Number
<Doc>
Rev
<RevCode>
Date: Thursday, September 27, 2007
Sheet 5 of 7

Generated by Foxit PDF Creator © Foxit Software
http://www.foxitsoftware.com. For evaluation only.

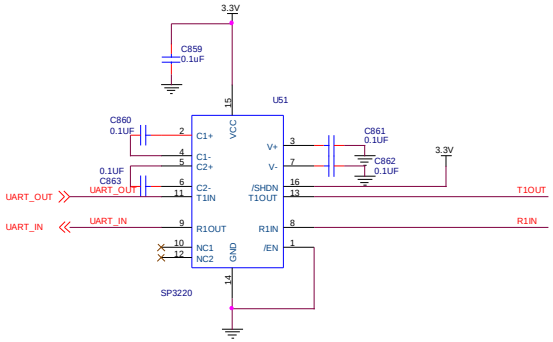

Consol

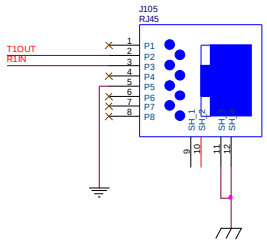

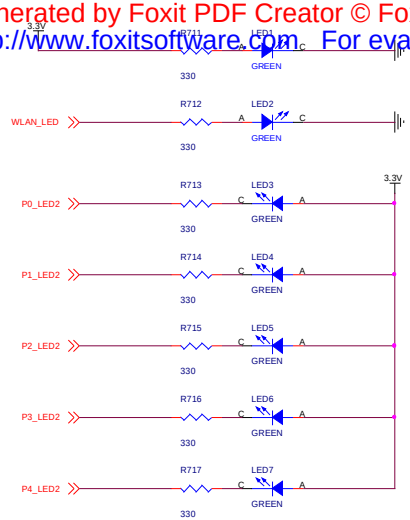

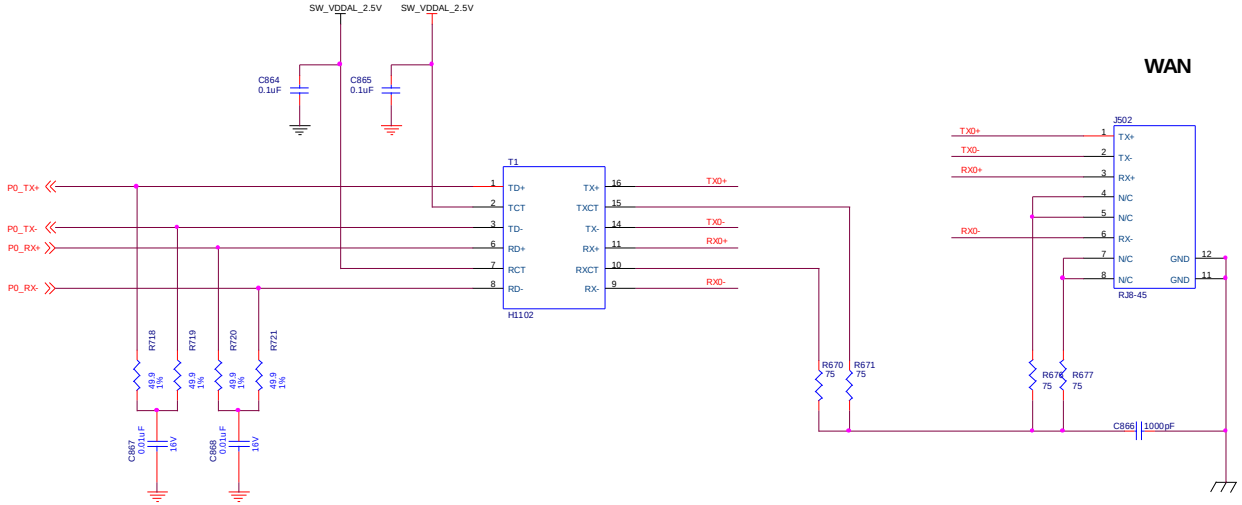

WAN

Title	<Title>	
Size C	Document Number <Doc>	Rev <RevCode>
Date: Thursday, September 27, 2007	Sheet 6 of 7	

Generated by Foxit PDF Creator © Foxit Software
http://www.foxitsoftware.com For evaluation only.

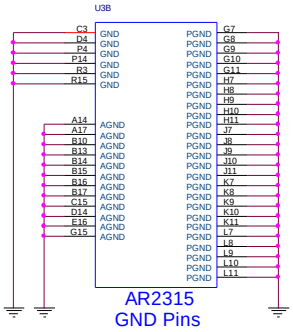

GROUND PINS

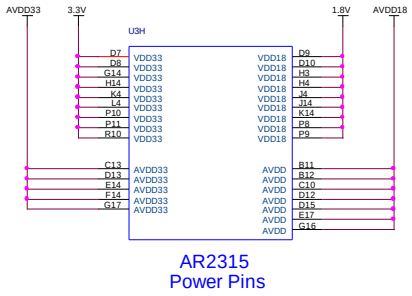

POWER PINS

3.3V REGULATOR

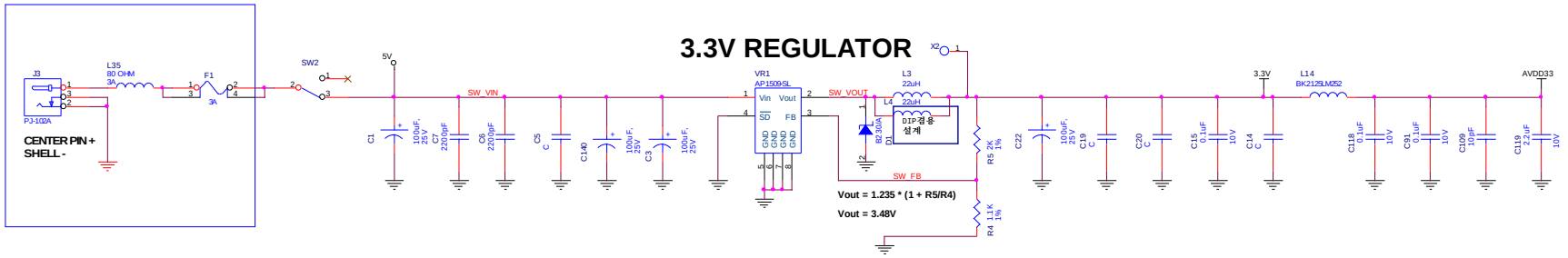

ATHEROS CONFIDENTIAL
PRELIMINARY

1.8V REGULATOR

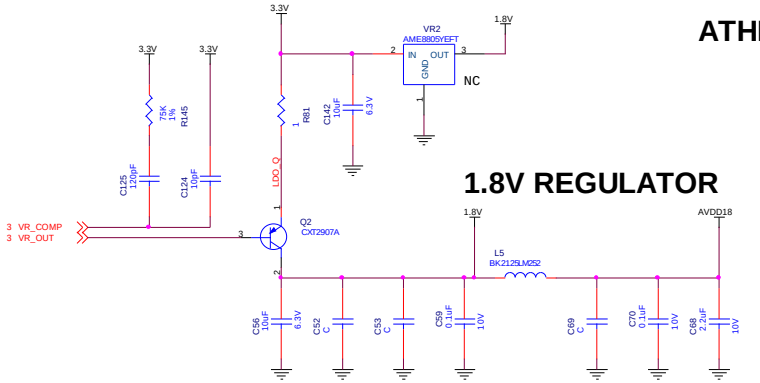

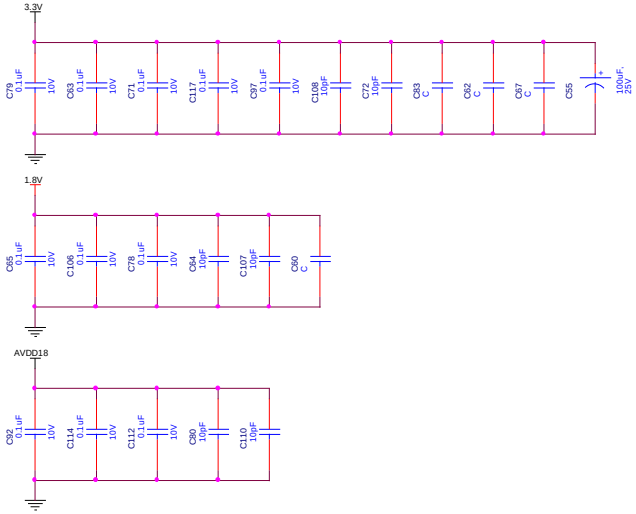

Title	<Title>	
Size C	Document Number <Doc>	Rev <RevCode>
Date: Thursday, September 27, 2007	Sheet 7 of 7	