Module Dimension	20.7mm(L)X13.mm(W)X2.0mm(H)
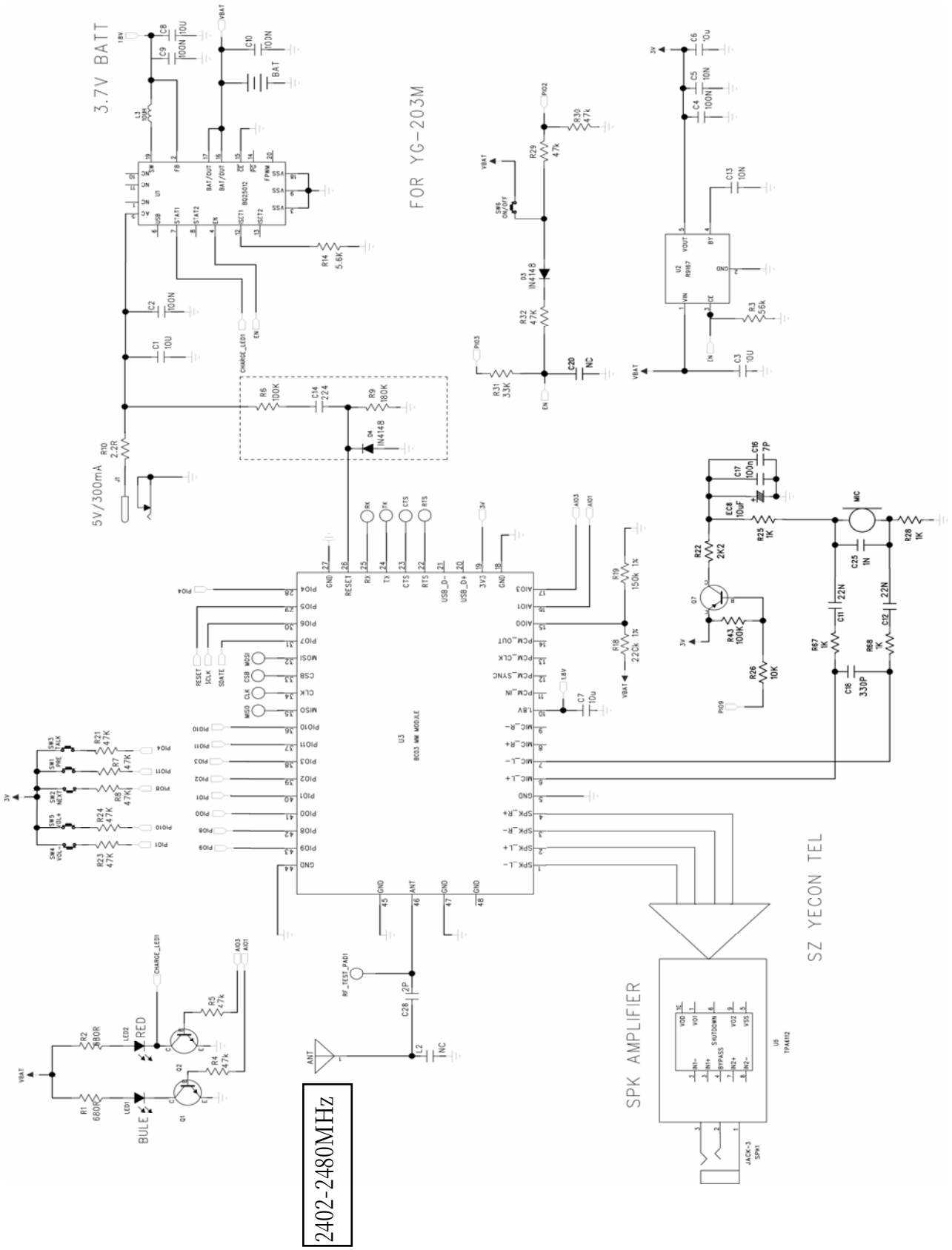
6. Schematic Diagram