MODEL NO: 37025(TX 27.145MHZ)

TX CIRCUIT DIAGRAM

PAGE NO:1 OF 1

APPLICANT: TOY STATE INDUSTRIAL LTD

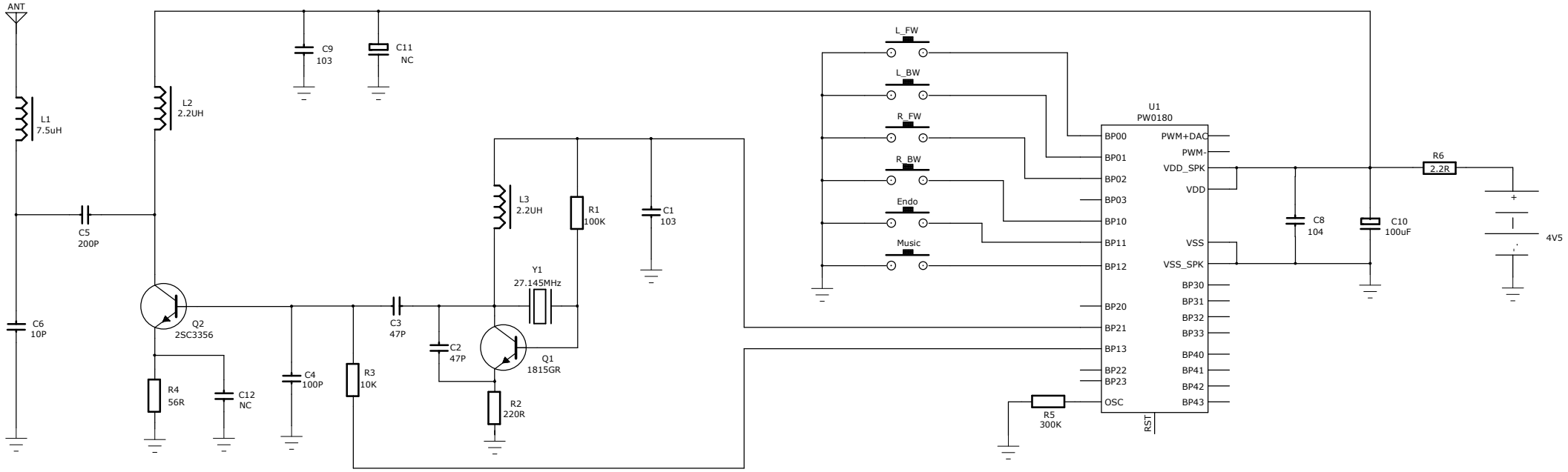

COMPANY: TOY STATE INDUSTRIAL LTD	
MODEL: 37025TX 27.145MHz	
VER: 00	
DWN. YHYANG	DATE: Jun-2-2012
CHK.	DATE:
APP.	DATE: