DOC. NAME	IS2122	DOC. NUMBER	

SHEET	14
DRWN	
DATE	2006-12-20
CHECK	
APPD	
APPD DATE	
REF	
REMARK	
CHANGED	

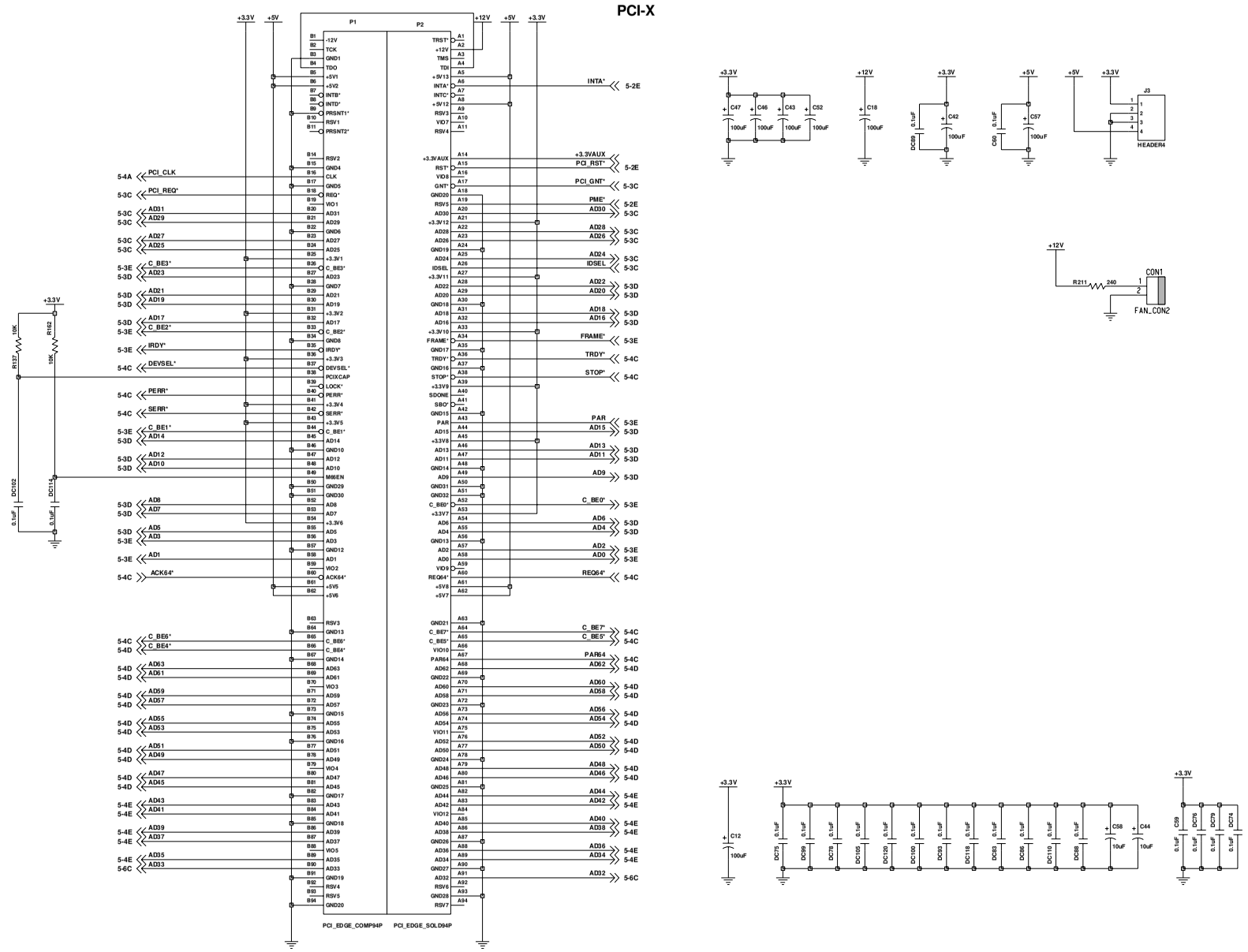

SYSMATE

DOC. NAME	IS2122	DOC. NUMBER	

SHEET	13
DRWN	
DATE	2006-12-20
CHECK	
APPD	
APPD DATE	
REF	
REMARK	
CHANGED	

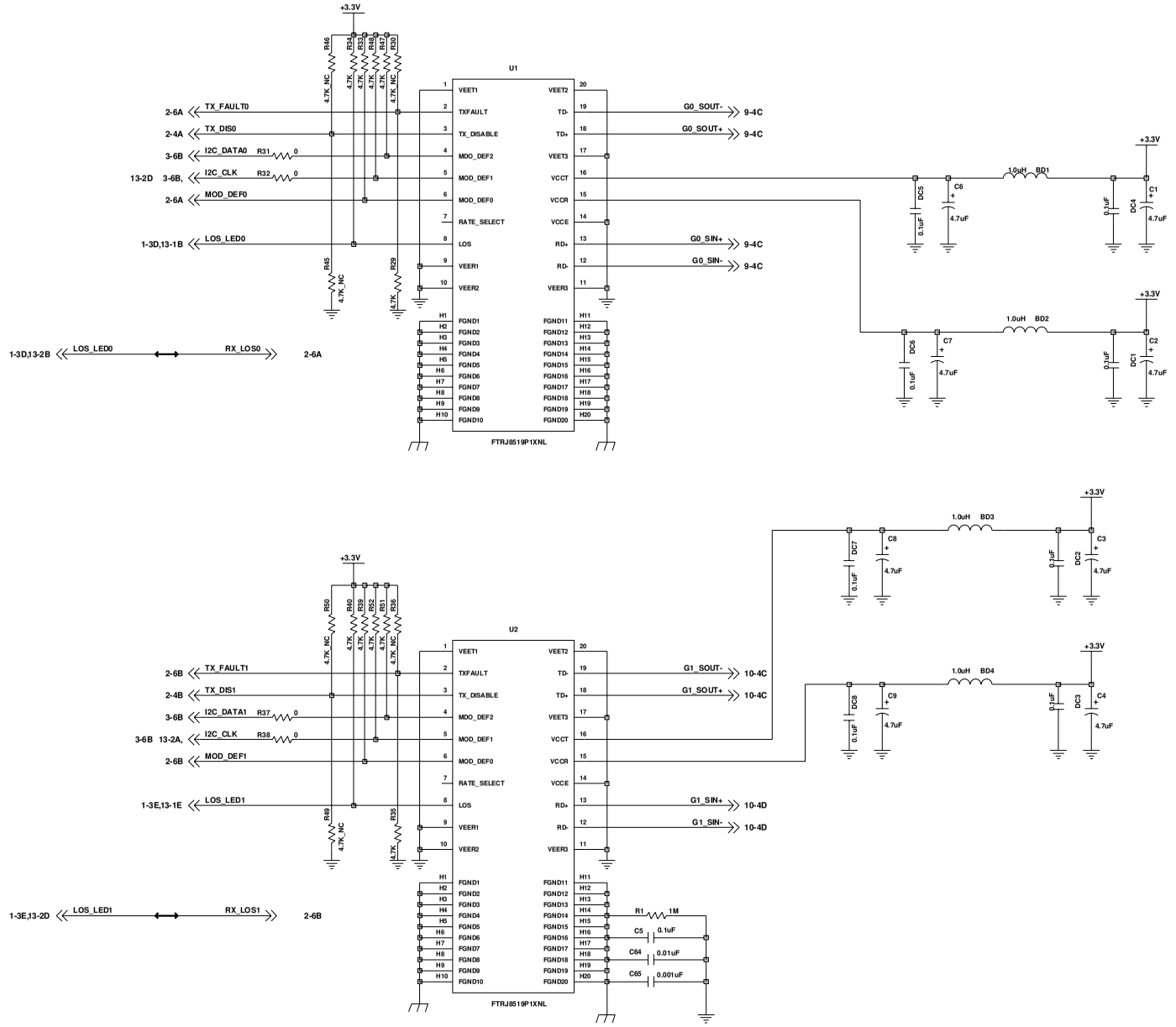

SYSMATE

DOC. NAME	IS2122	DOC. NUMBER	

SHEET	12
DRWN	
DATE	2006-12-20
CHECK	
APPD	
APPD DATE	
REF	
REMARK	
CHANGED	

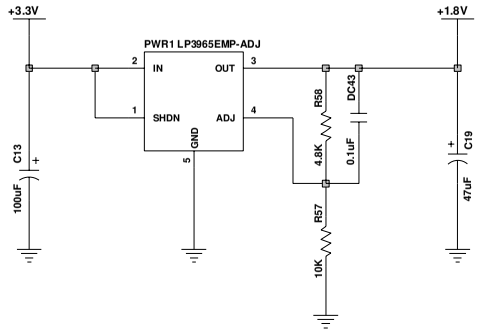

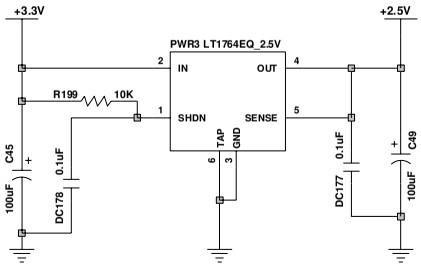

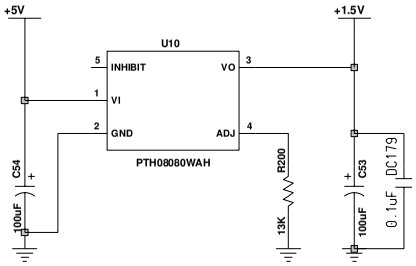

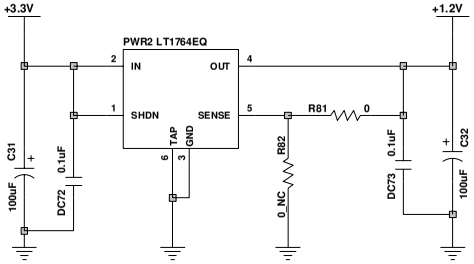

SYSMATE

DOC. NAME	IS2122	DOC. NUMBER	

SHEET	11
DRWN	
DATE	2006-12-20
CHECK	
APPD	
APPD DATE	
REF	
REMARK	
CHANGED	

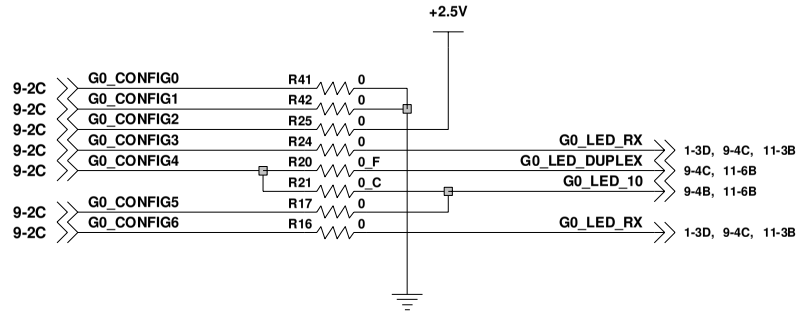

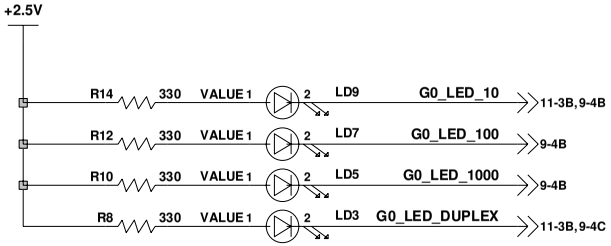

PHY_ADDRESS [4:0] : 00000
ENA_PAUSE : 0 (DISABLE)
ANEG[3:0] : 1110 (ADVERTIZE)
ENA_XC : 1 CNSSOVER ENABLE
125MHZ : 0 ENABLE
HWCFG : 0110 RGMII TO SGMII
HWCFG : 0011 RGMII TO FIBER
DISFC : 1 DISABLE
INT_DOC : 1 LOW
75150 : 0 50OHM

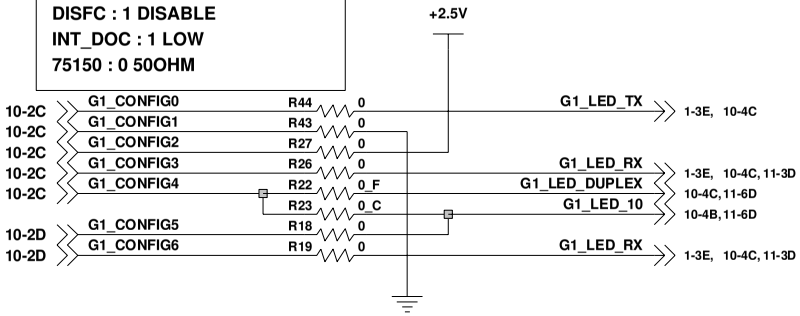

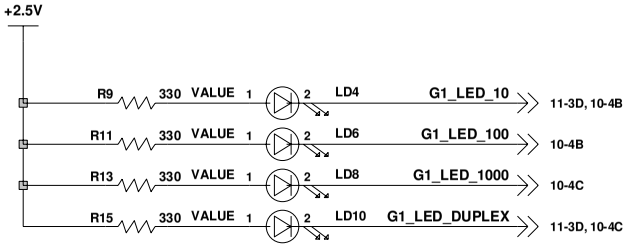

PHY_ADDRESS [4:0] : 00001
ENA_PAUSE : 0 (DISABLE)
ANEG[3:0] : 1110 (ADVERTIZE)
ENA_XC : 1 CNSSOVER ENABLE
125MHZ : 0 ENABLE
HWCFG : 0110 RGMII TO SGMII
HWCFG : 0011 RGMII TO FIBER
DISFC : 1 DISABLE
INT_DOC : 1 LOW
75150 : 0 50OHM

SYSMATE

DOC. NAME	IS2122	DOC. NUMBER	

SHEET	10
DRWN	
DATE	2006-12-20
CHECK	
APPD	
APPD DATE	
REF	
REMARK	
CHANGED	

GIGA_ETH1

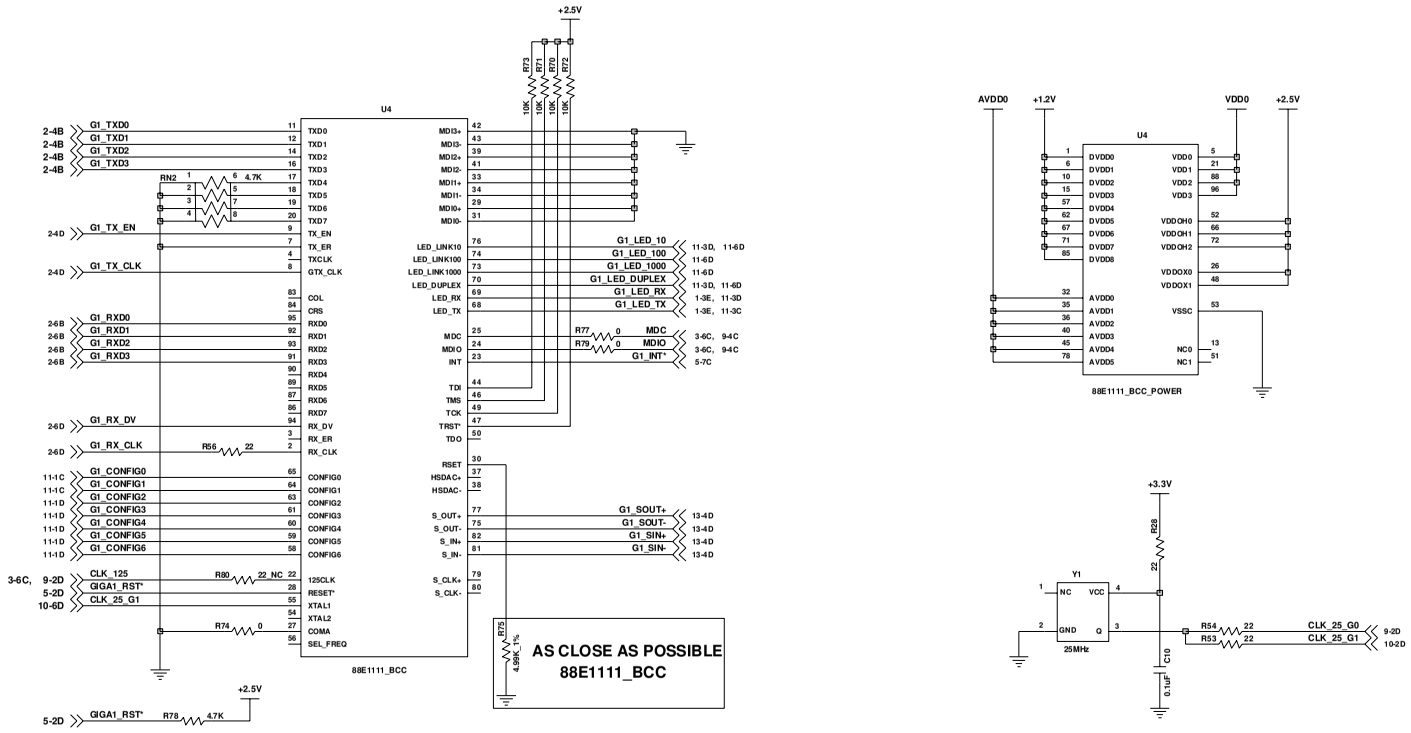

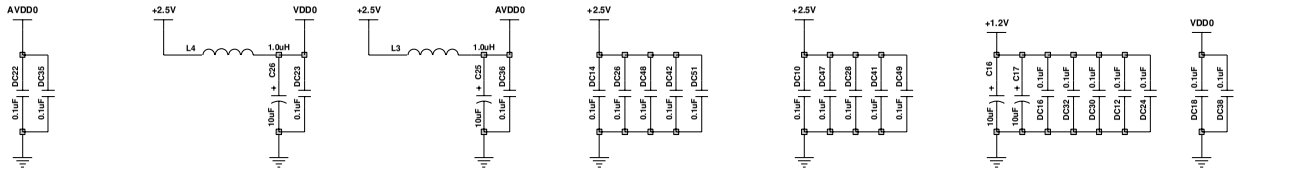

SYSMATE

DOC. NAME	IS2122	DOC. NUMBER	

SHEET	9
DRWN	
DATE	2006-12-20
CHECK	
APPD	
APPD DATE	
REF	
REMARK	
CHANGED	

GIGA_ETH0

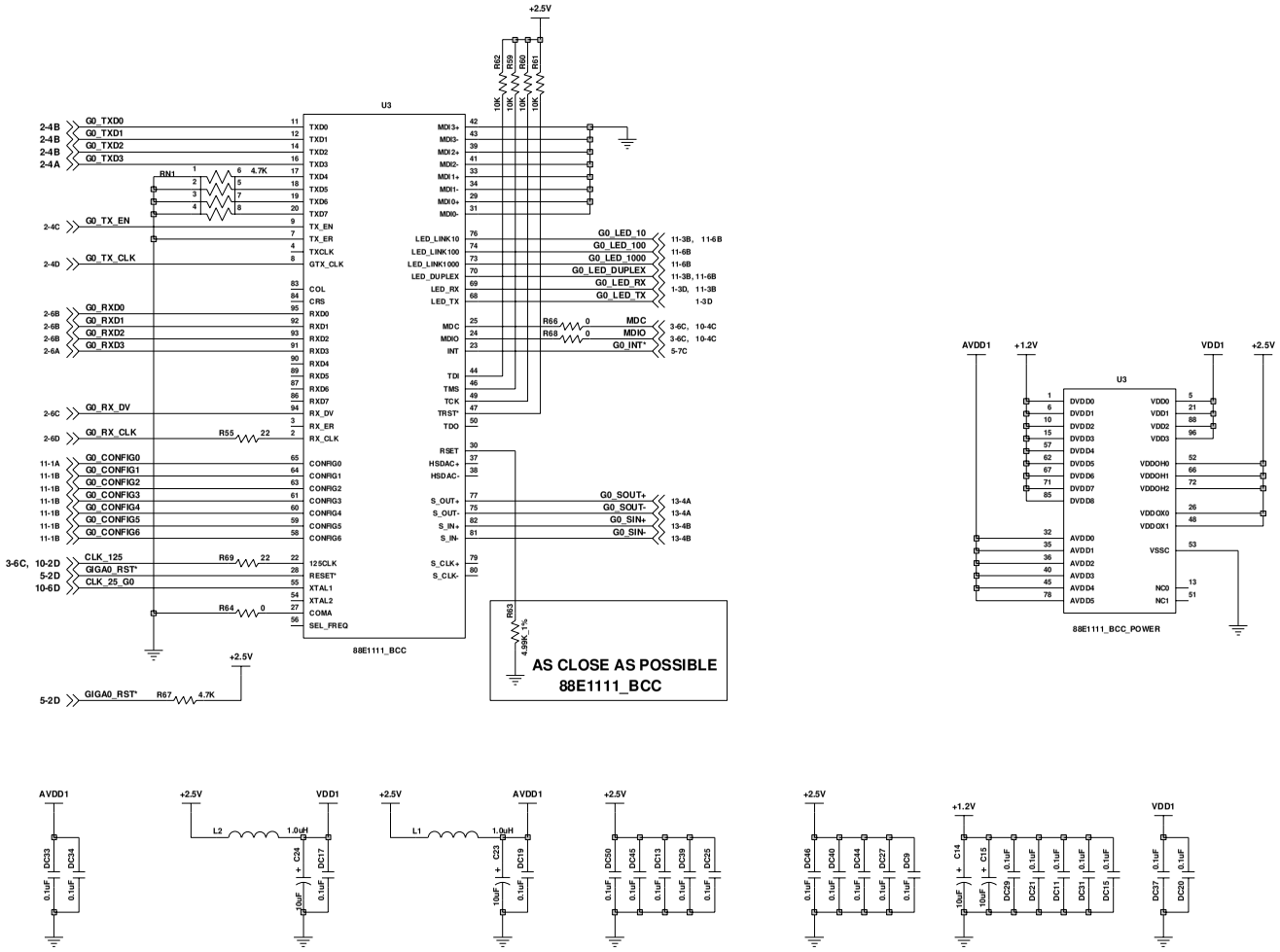

SYSMATE

DOC. NAME	IS2122	DOC. NUMBER	

SHEET	8
DRWN	
DATE	2006-12-20
CHECK	
APPD	
APPD DATE	
REF	
REMARK	

CHANGED

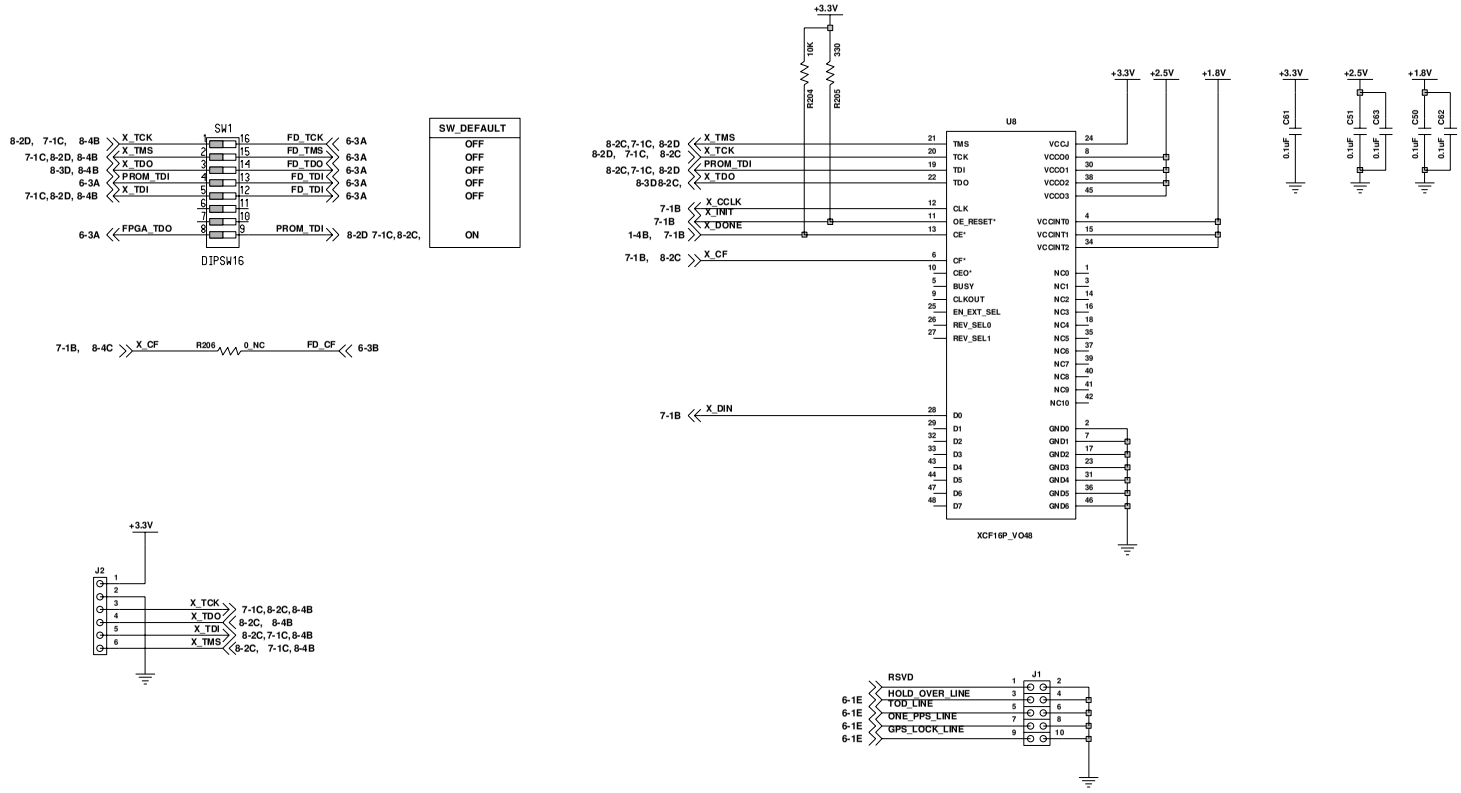

SYSMATE

DOC. NAME	IS2122	DOC. NUMBER

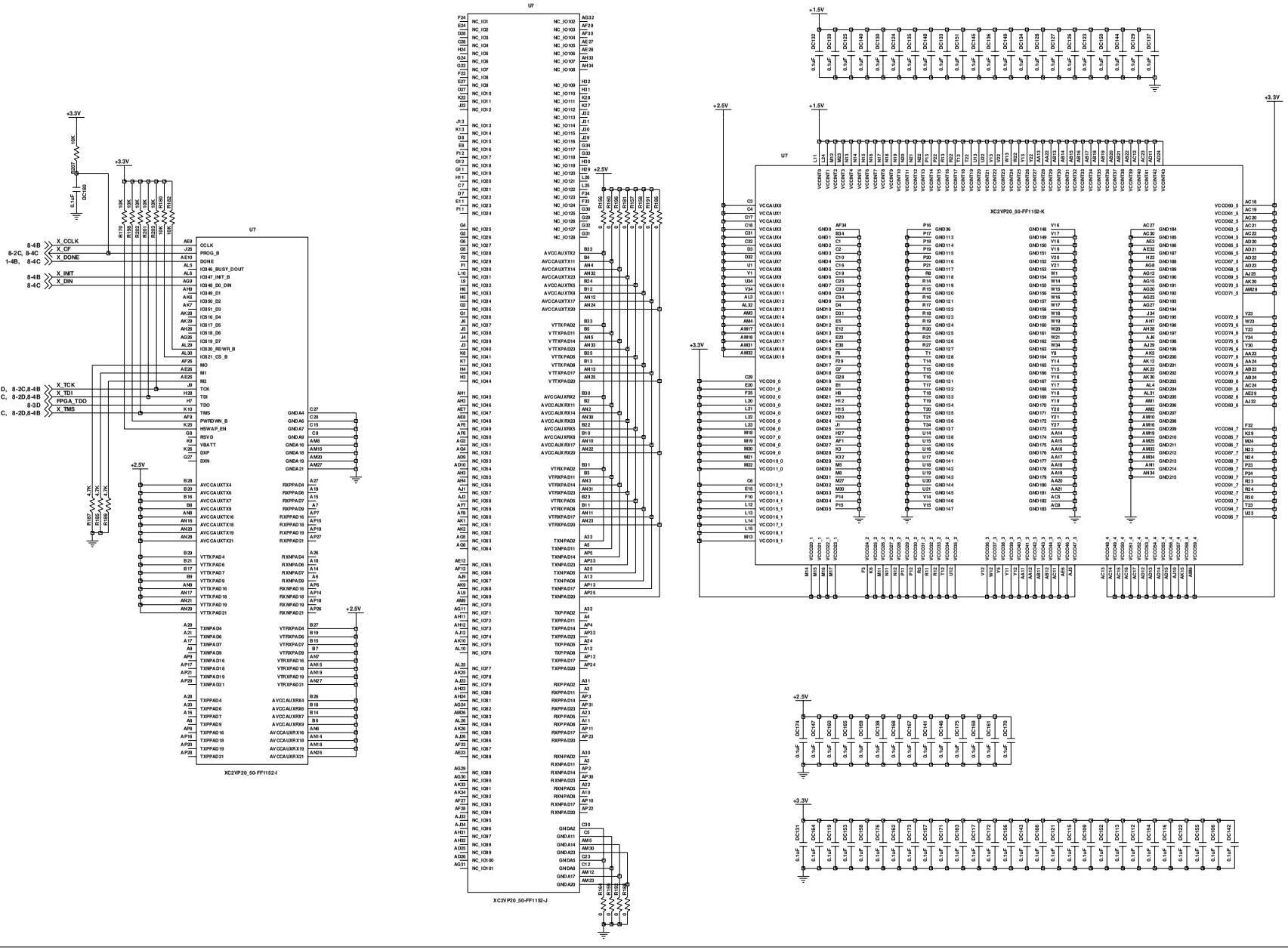

SHEET	7
DRWN	
DATE	2006-12-20
CHECK	
APPD	
APPD DATE	
REF	
REMARK	

CHANGED

SYSMATE

DOC. NAME	IS2122	DOC. NUMBER	

SHEET	6
DRWN	
DATE	2006-12-20
CHECK	
APPD	
APPD DATE	
REF	
REMARK	
CHANGED	

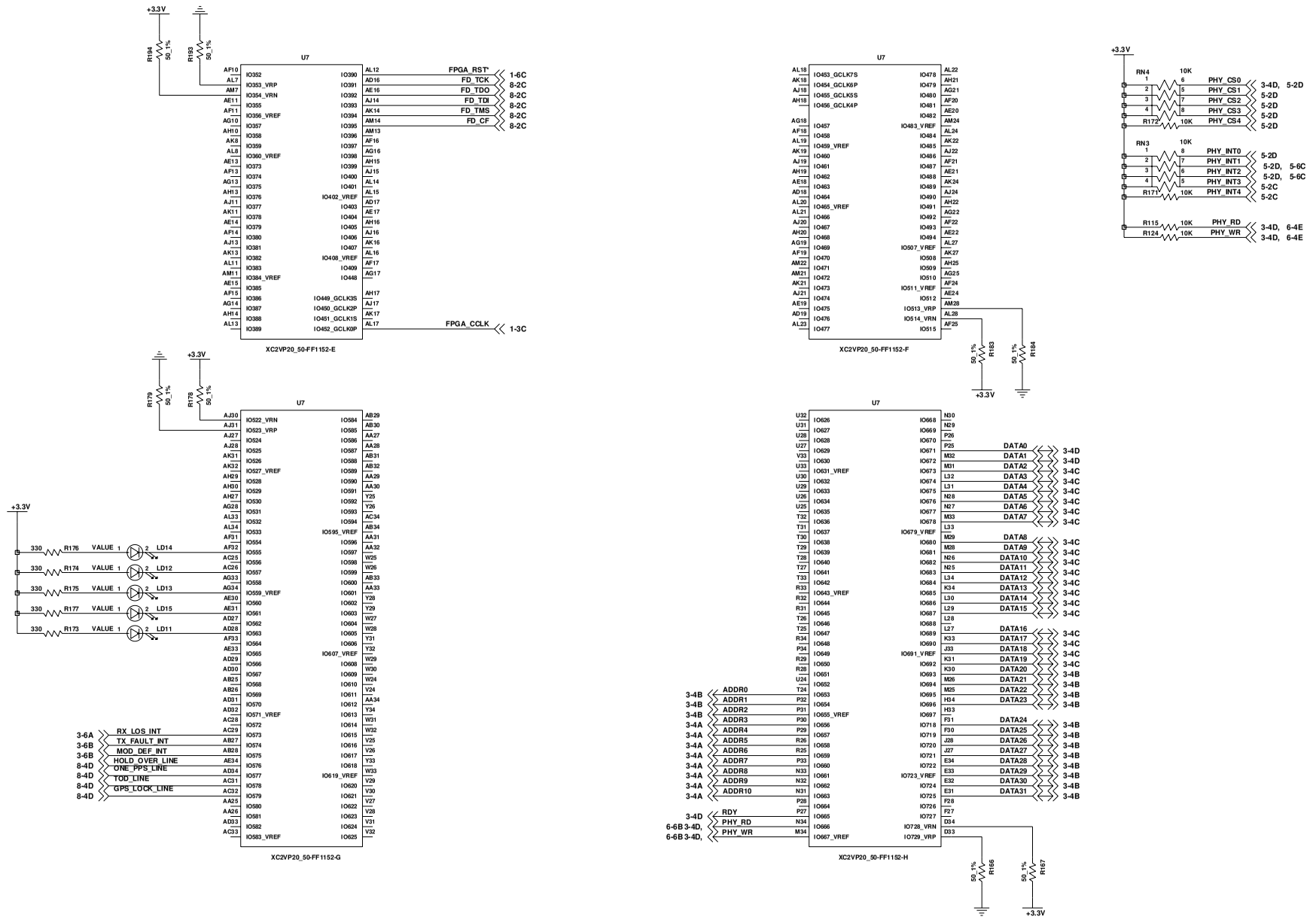

SYSMATE

DOC. NAME	IS2122	DOC. NUMBER	

SHEET	5
DRWN	
DATE	2006-12-20
CHECK	
APPD	
APPD DATE	
REF	
REMARK	
CHANGED	

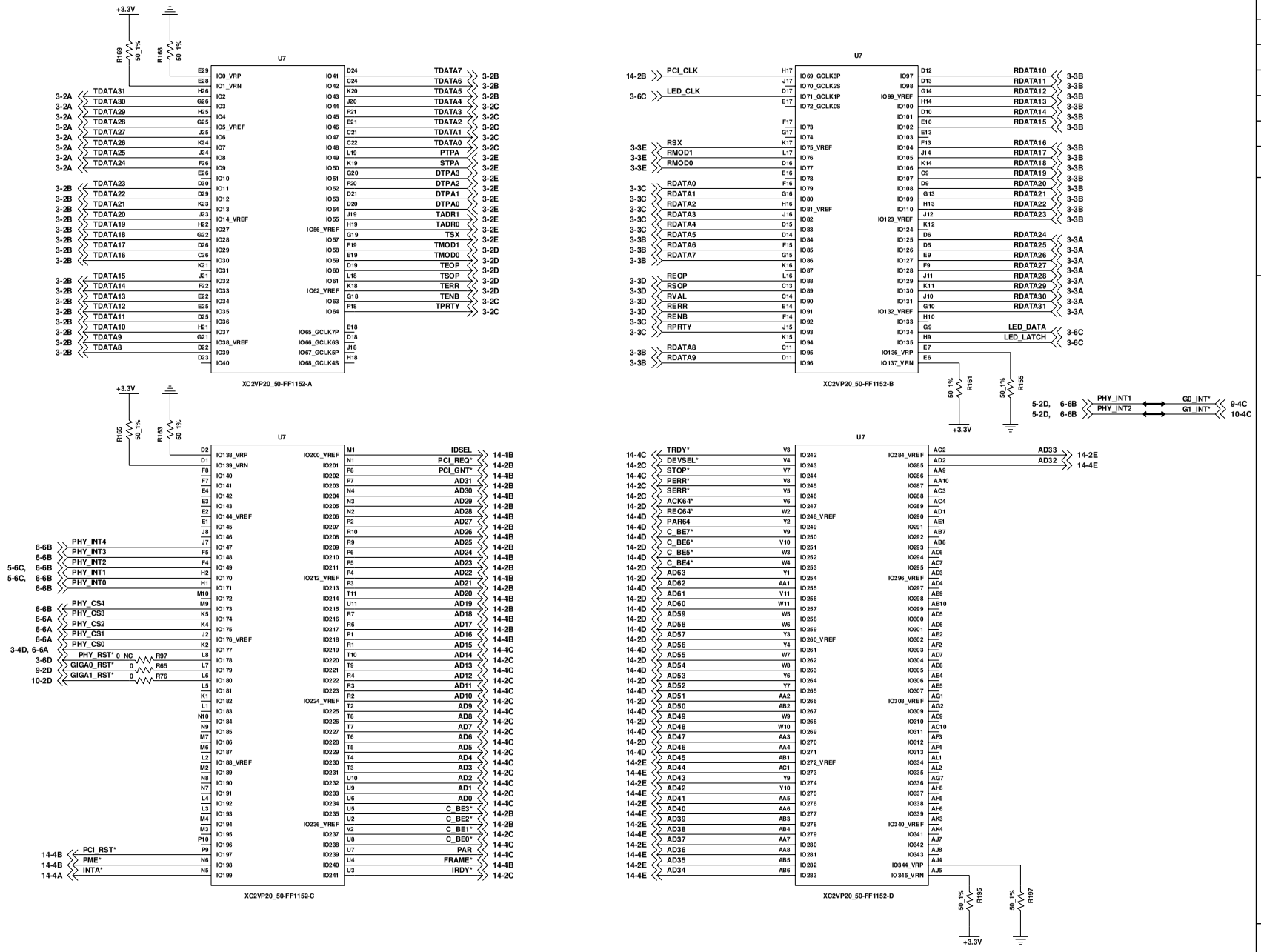

SYSMAYE

DOC. NAME	IS2122	DOC. NUMBER	

SHEET	4
DRWN	
DATE	2006-12-20
CHECK	
APPD	
APPD DATE	
REF	
REMARK	
CHANGED	

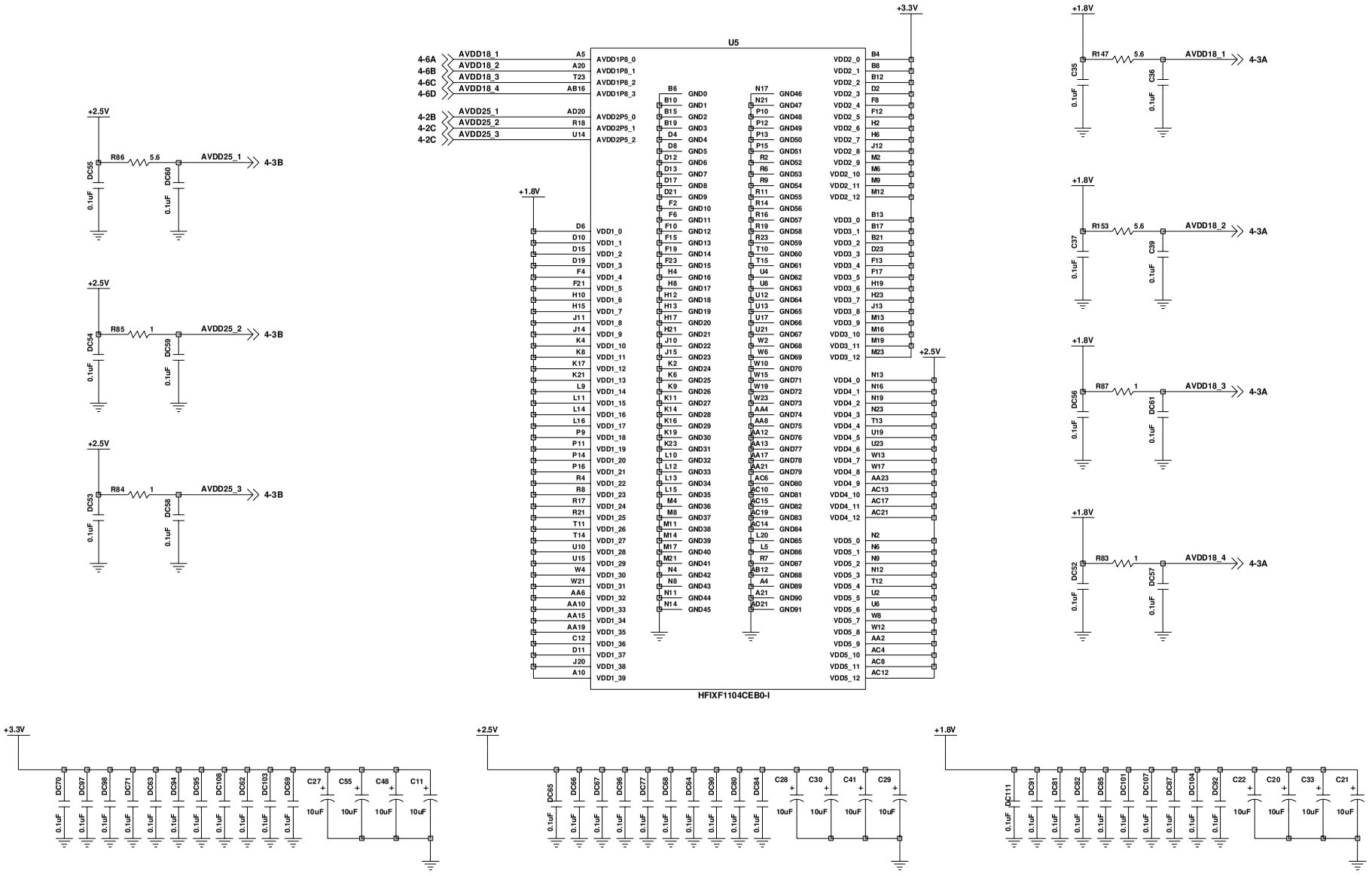

SYSMATE

DOC. NAME	IS2122	DOC. NUMBER	

SHEET	3
DRWN	
DATE	2006-12-20
CHECK	
APPD	
APPD DATE	
REF	
REMARK	
CHANGED	

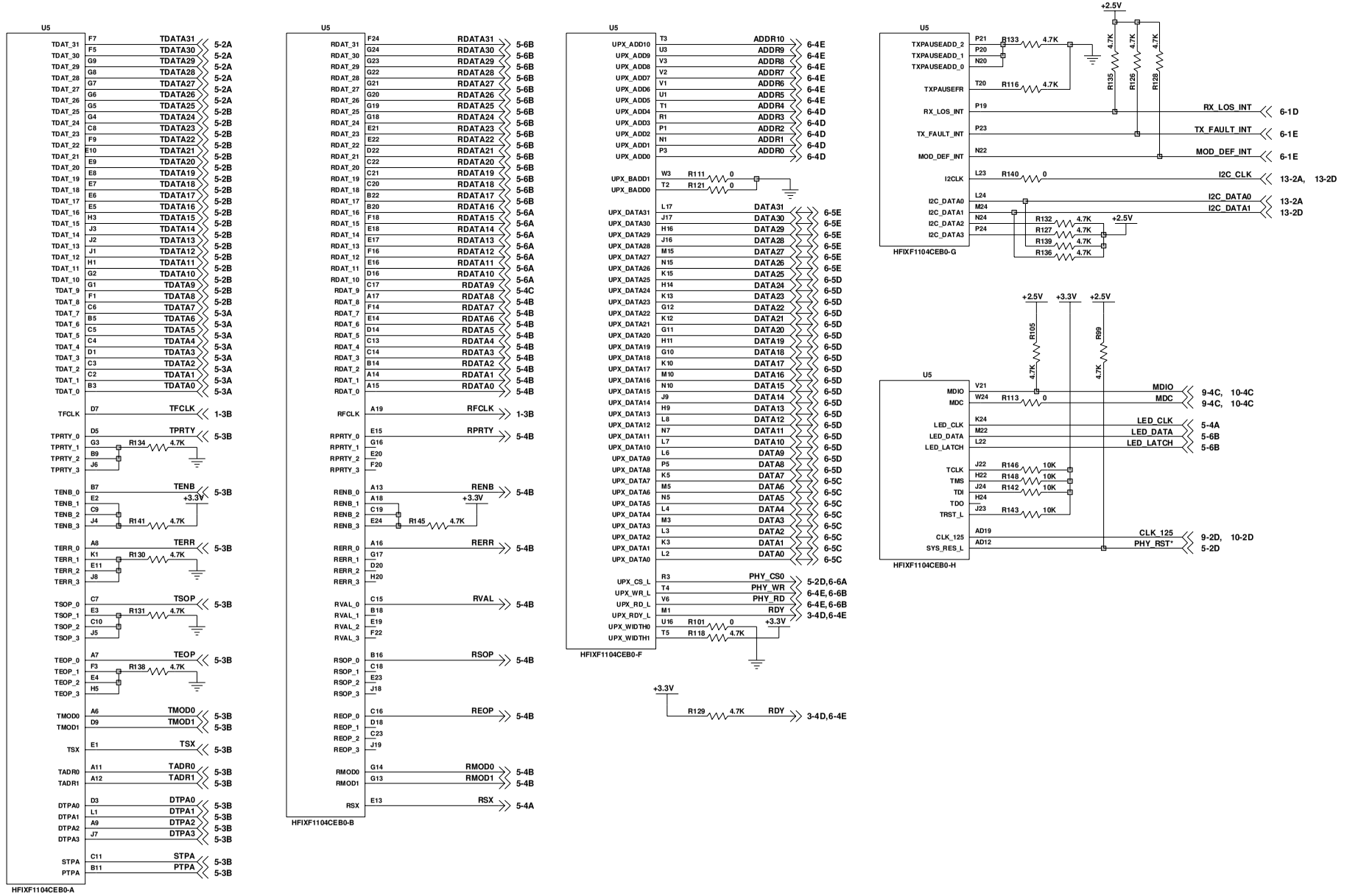

SYSMATE

DOC. NAME	IS2122	DOC. NUMBER	

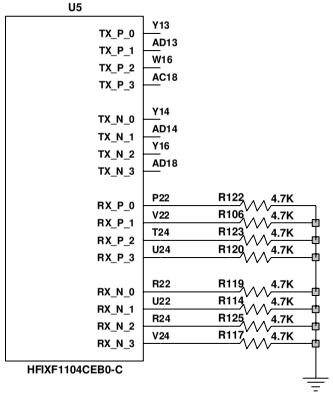

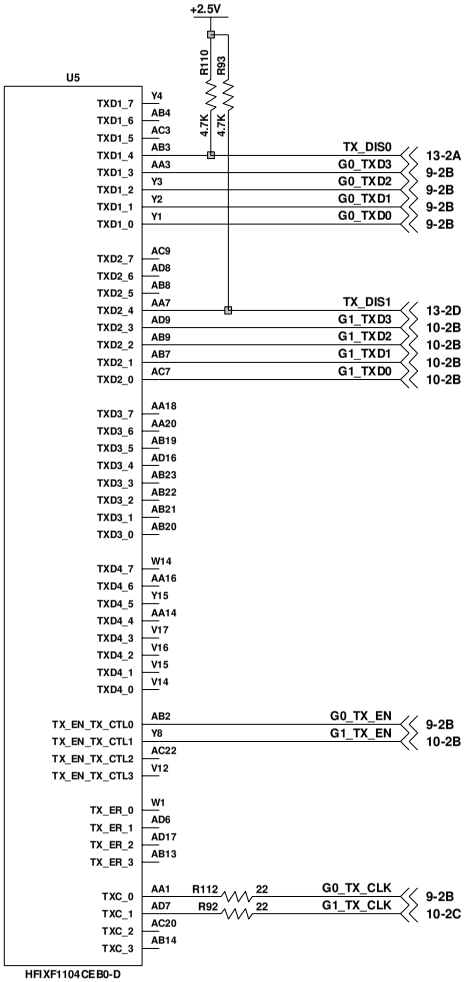

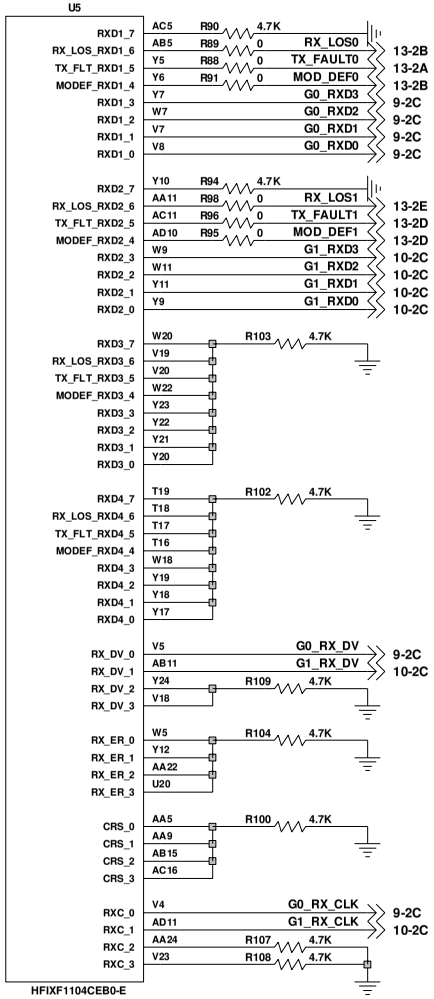

SHEET	2
DRWN	
DATE	2006-12-20
CHECK	
APPD	
APPD DATE	
REF	
REMARK	
CHANGED	

SYSMATE

DOC. NAME	IS2122	DOC. NUMBER	

SHEET	1
DRWN	
DATE	2006-12-20
CHECK	
APPD	
APPD DATE	
REF	
REMARK	
CHANGED	

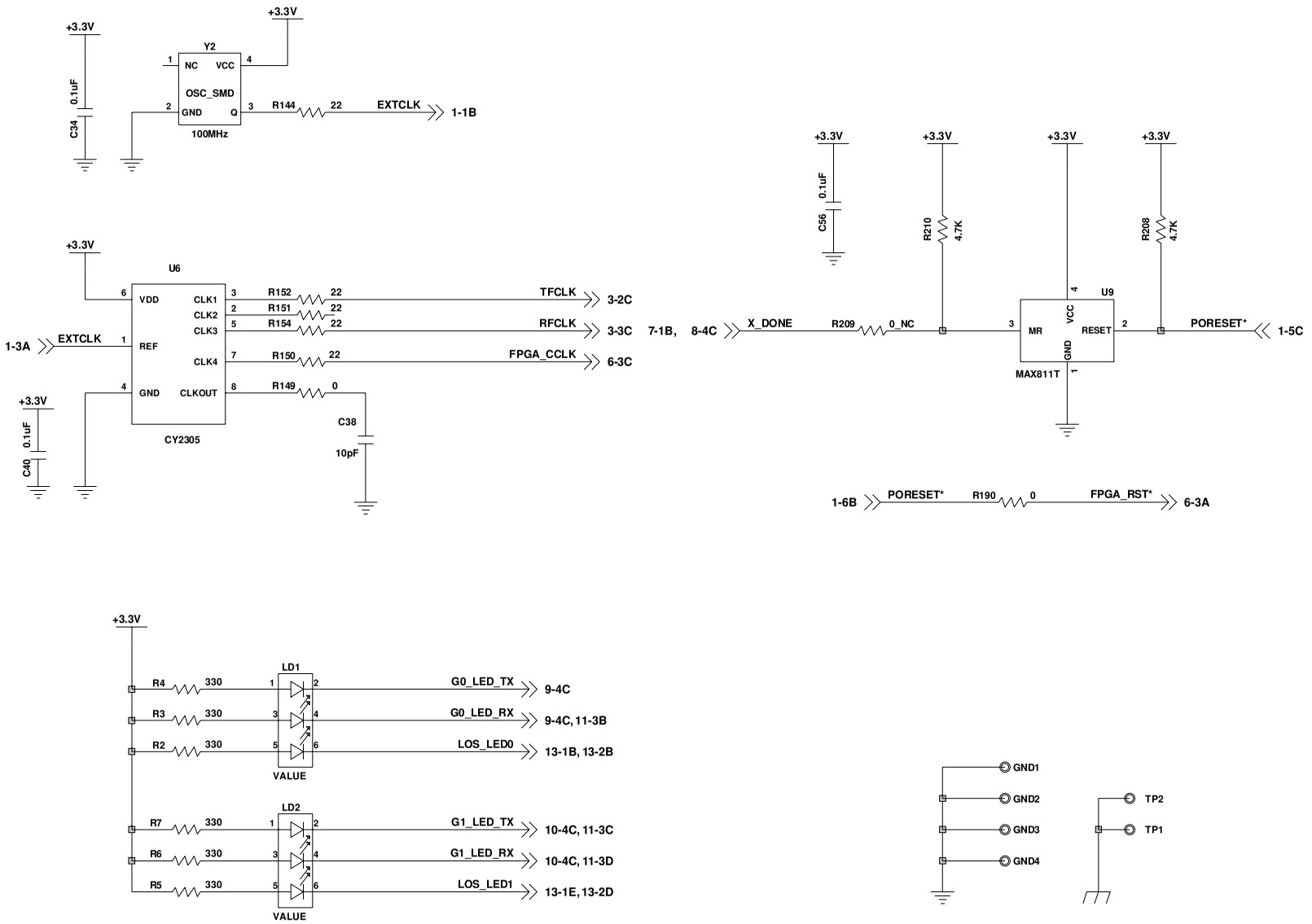

SYSMATE