DOC. NAME	IS4010E	DOC. NUMBER	

SHEET	17
DRWN	
DATE	2007-04-23
CHECK	
APPD	
APPD DATE	
REF	
REMARK	
CHANGED	

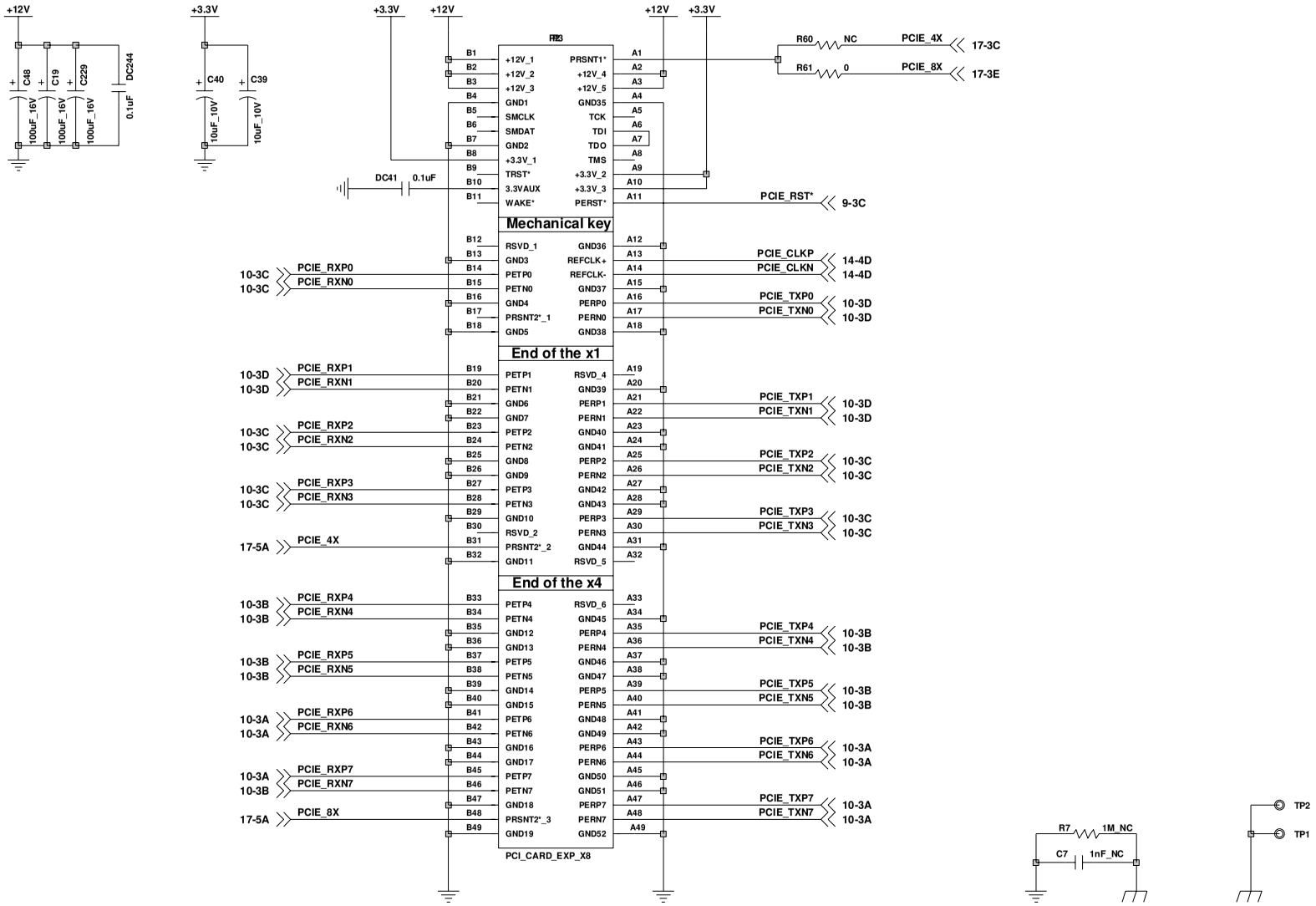

SYSMATE

DOC. NAME	IS4010E	DOC. NUMBER	

SHEET	16
DRWN	
DATE	2007-04-23
CHECK	
APPD	
APPD DATE	
REF	
REMARK	
CHANGED	

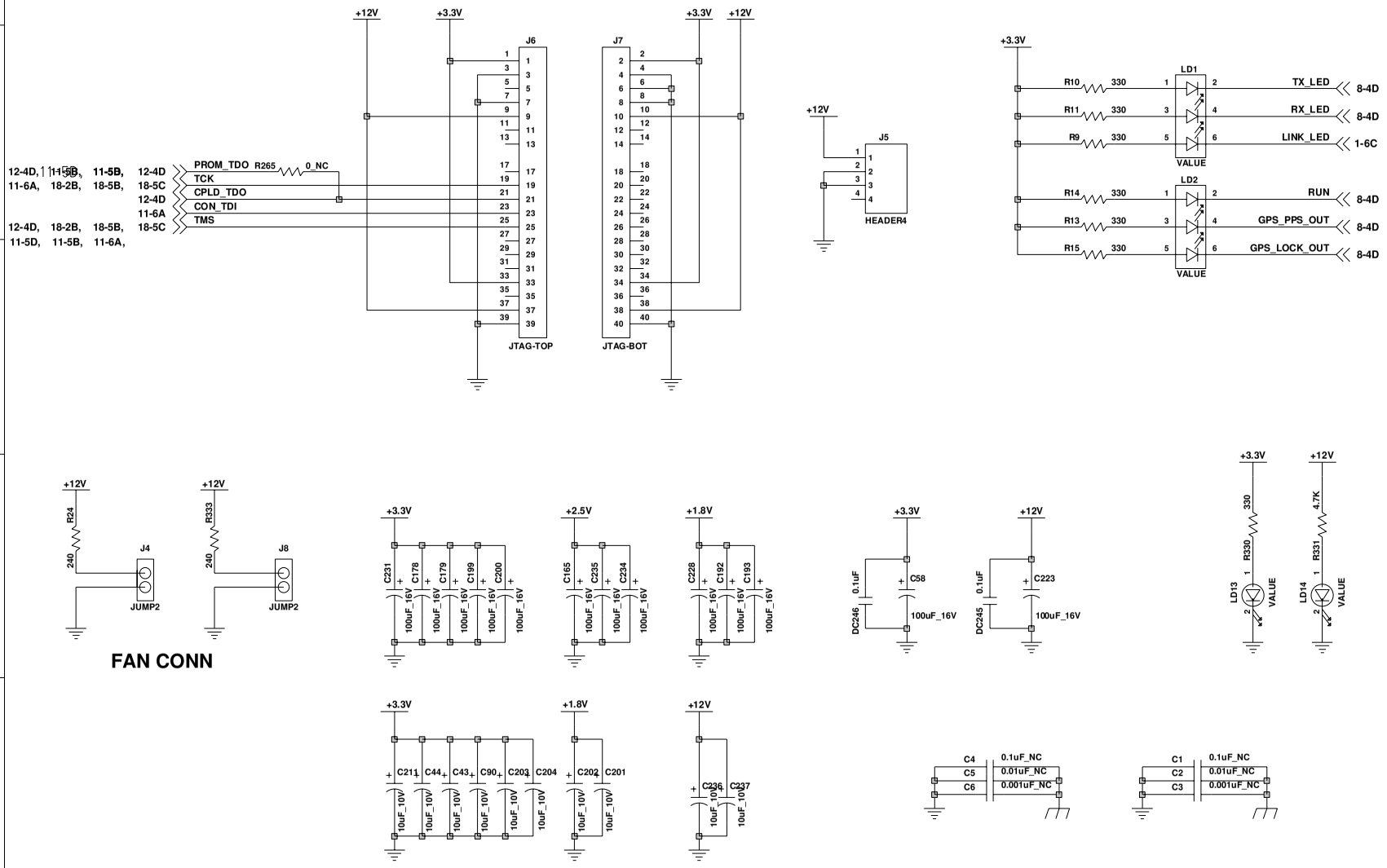

SYSMATE

DOC. NAME	IS4010E	DOC. NUMBER	

SHEET	15
DRWN	
DATE	2007-04-23
CHECK	
APPD	
APPD DATE	
REF	
REMARK	

CHANGED

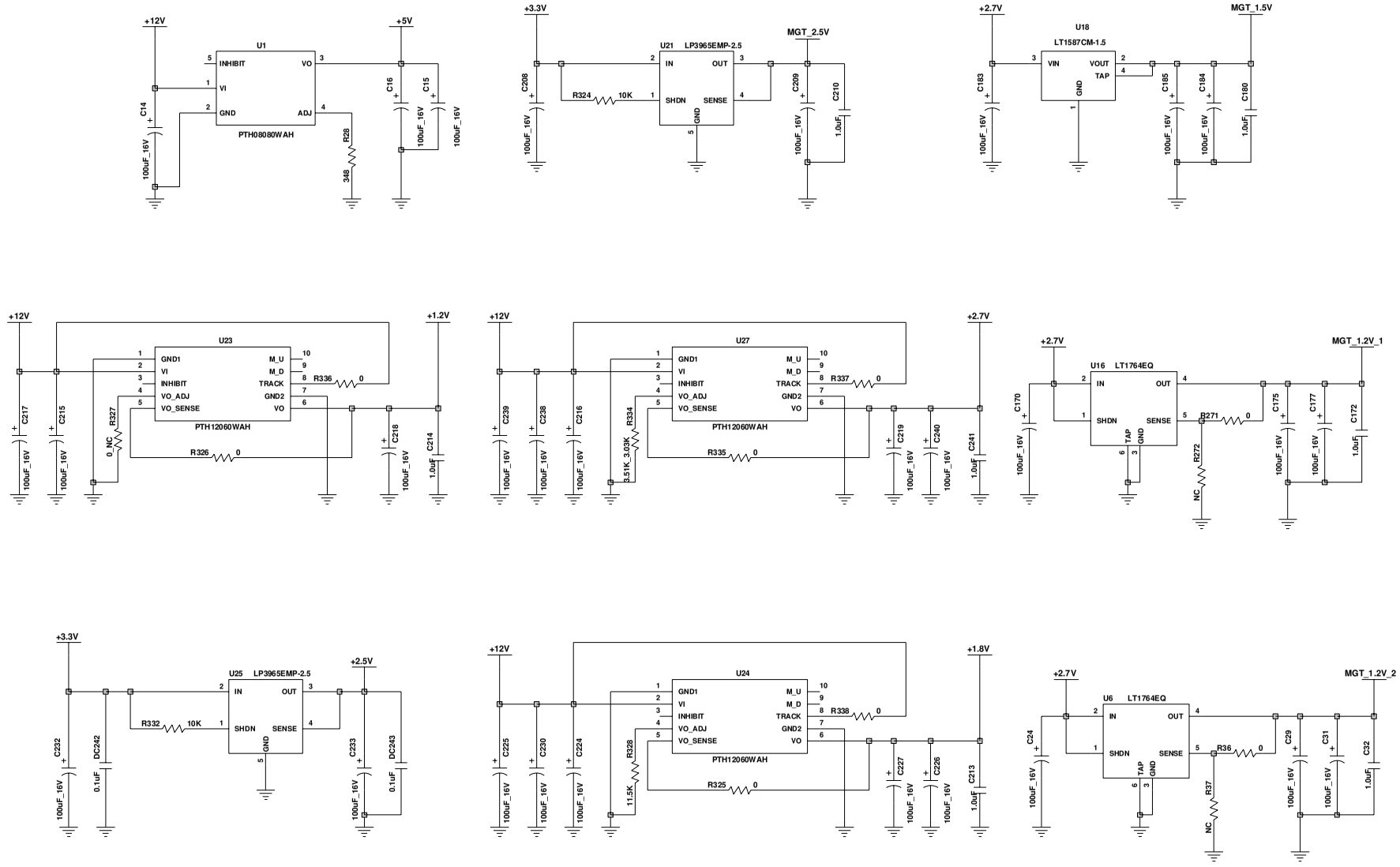

SYSMATE

DOC. NAME	IS4010E	DOC. NUMBER	

SHEET	14
DRWN	
DATE	2007-04-23
CHECK	
APPD	
APPD DATE	
REF	
REMARK	
CHANGED	

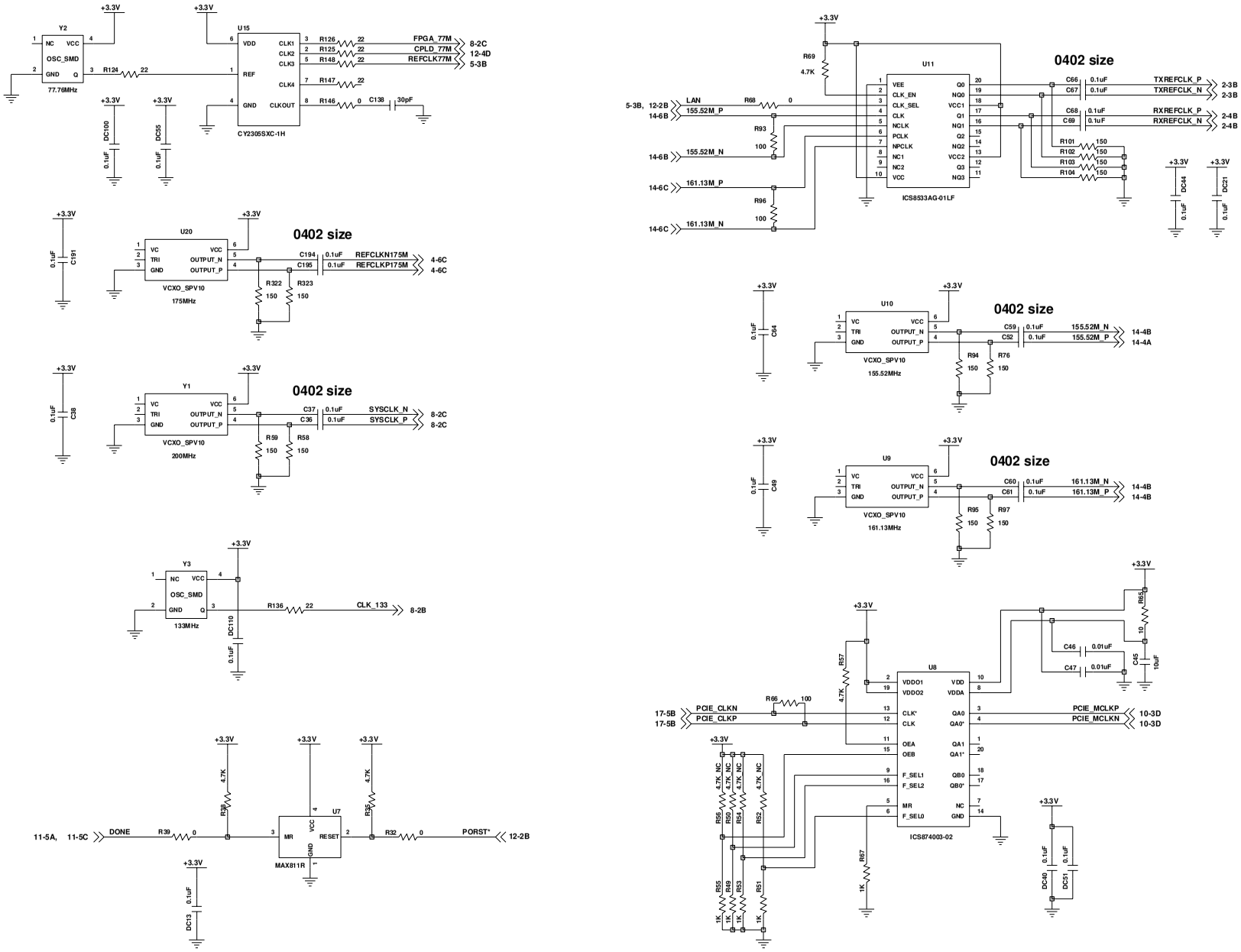

SYSMATE

DOC. NAME	IS4010E	DOC. NUMBER	

SHEET	13
DRWN	
DATE	2007-04-23
CHECK	
APPD	
APPD DATE	
REF	
REMARK	
CHANGED	

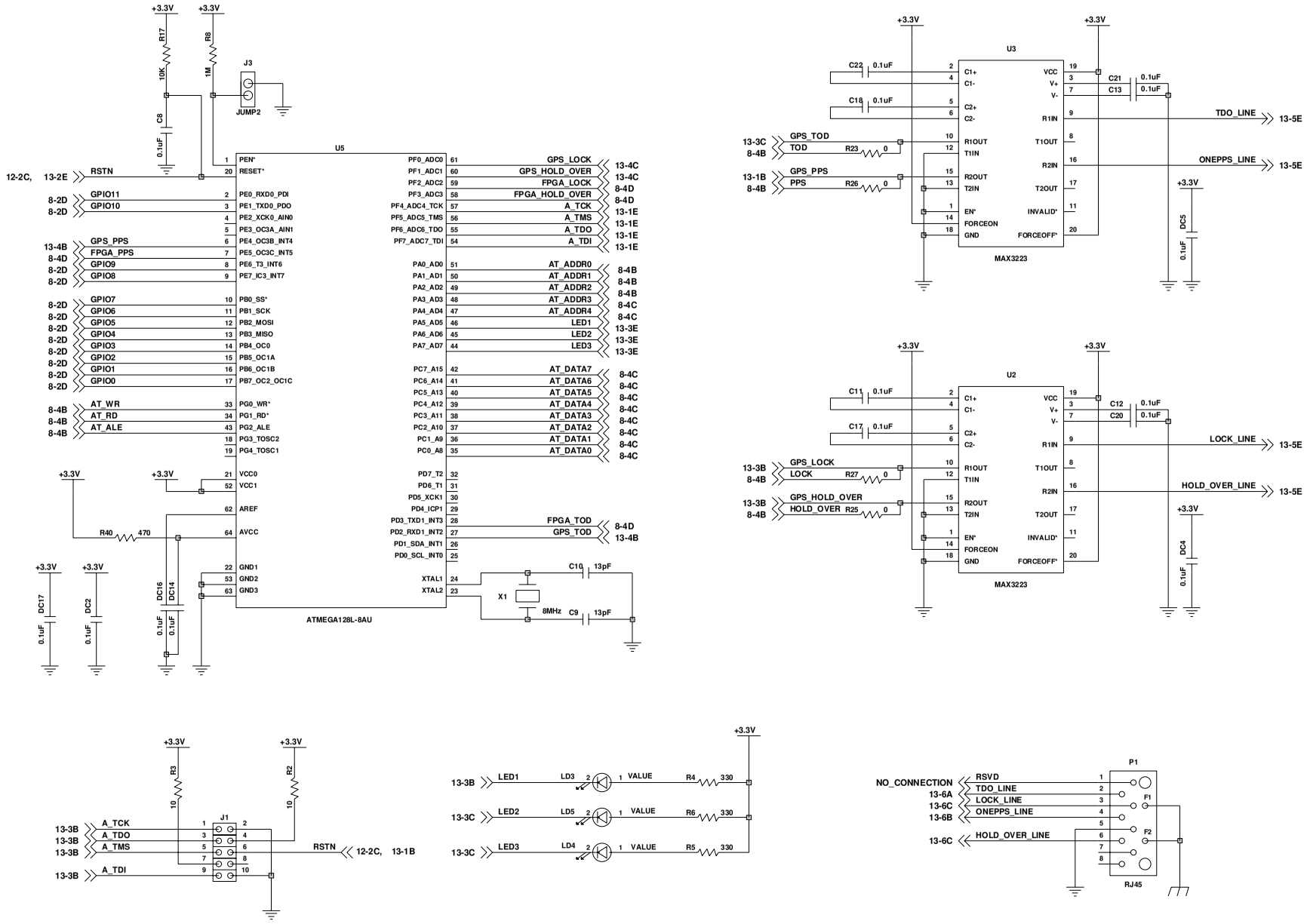

SYSMATE

DOC. NAME	IS4010E	DOC. NUMBER	

SHEET	12
DRWN	
DATE	2007-04-23
CHECK	
APPD	
APPD DATE	
REF	
REMARK	
CHANGED	

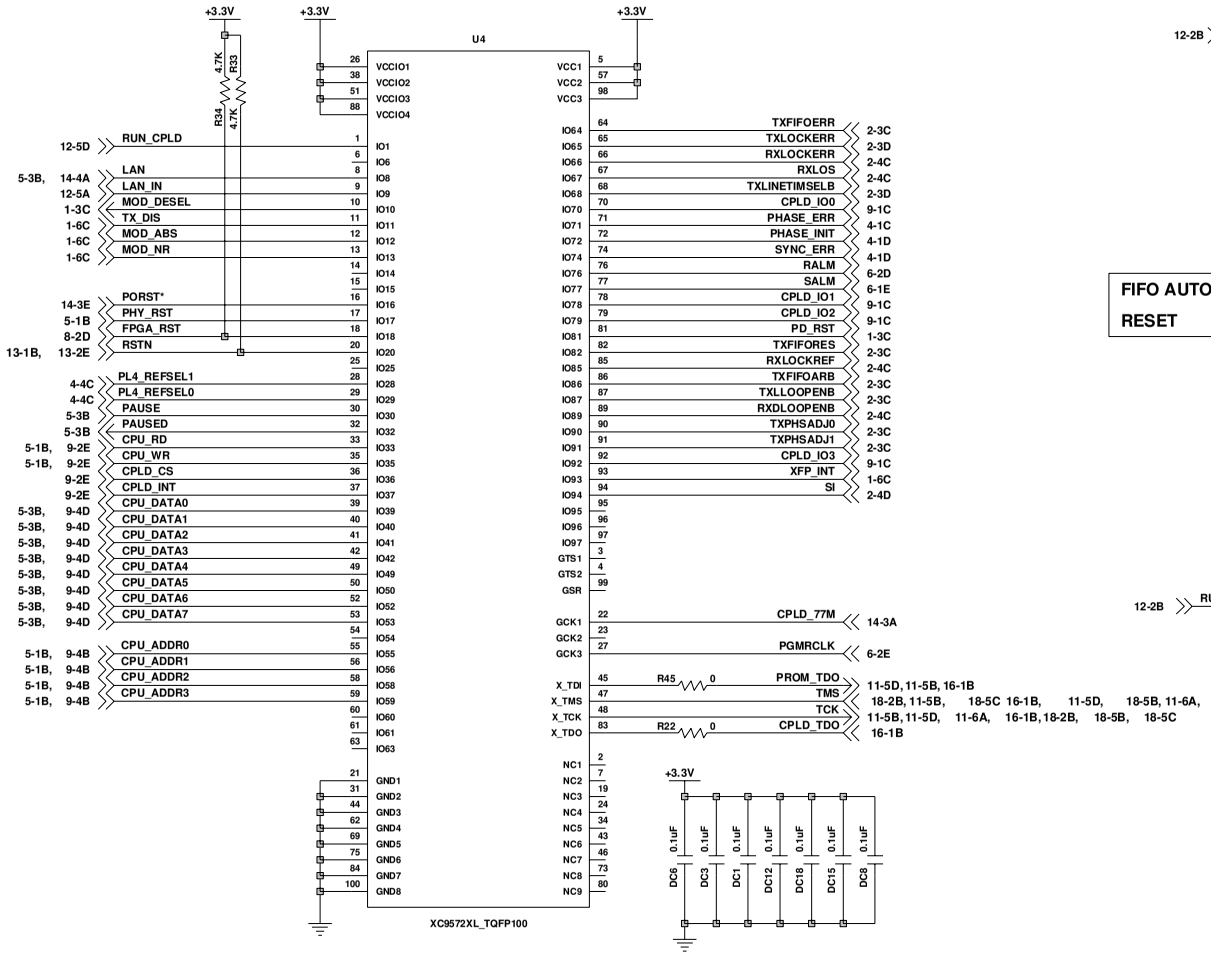

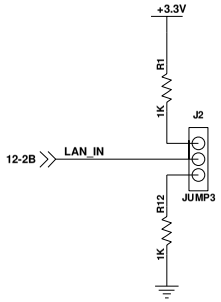

FIFO AUTO RESET	TXFIFORES	TXFIFOARB
	1	0

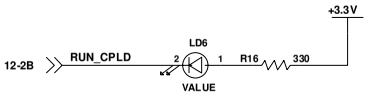

SYSMATE

DOC. NAME	IS4010E	DOC. NUMBER	

SHEET	11
DRWN	
DATE	2007-04-23
CHECK	
APPD	
APPD DATE	
REF	
REMARK	
CHANGED	

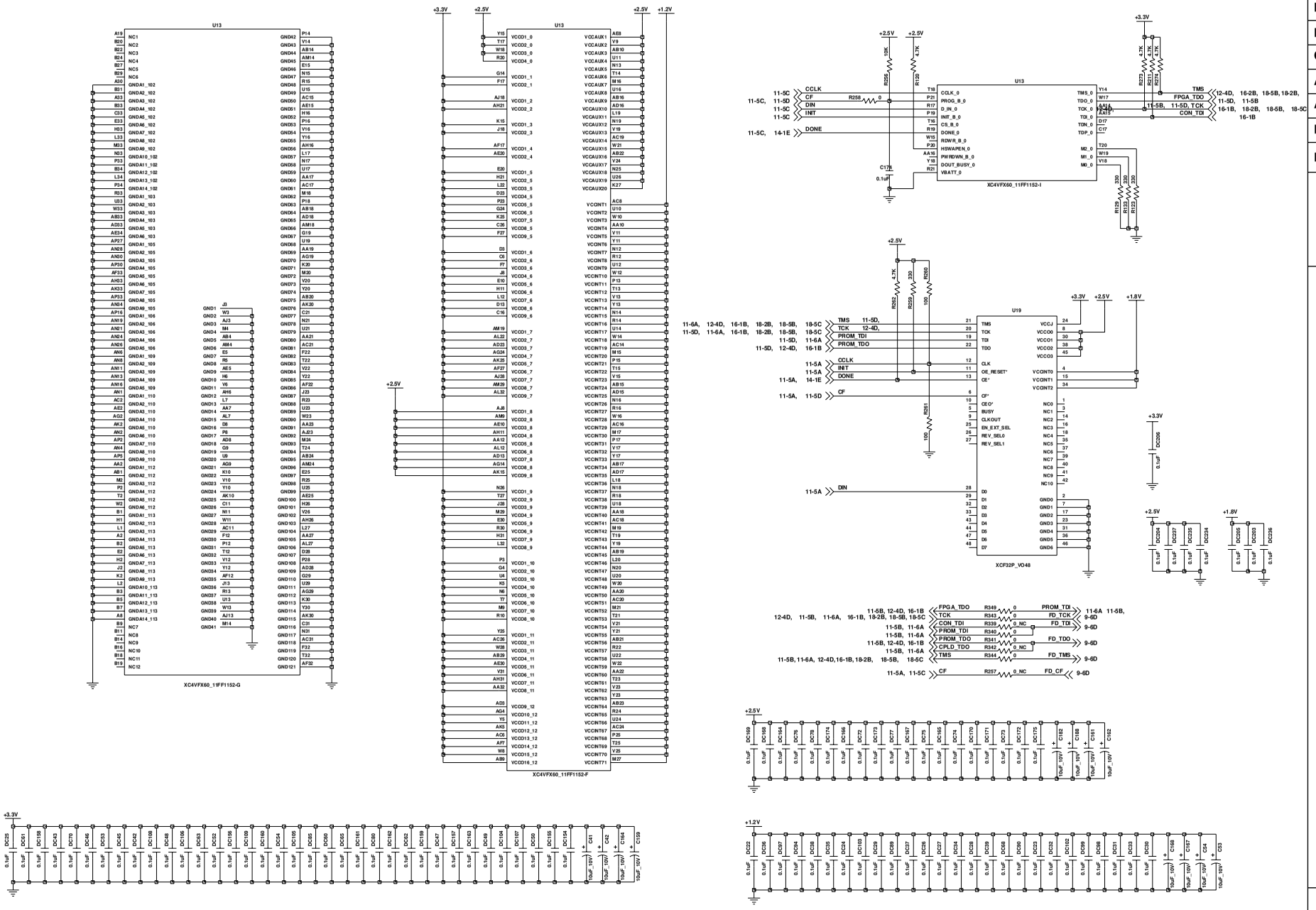

SYSMATE

DOC. NAME	IS4010E	DOC. NUMBER	

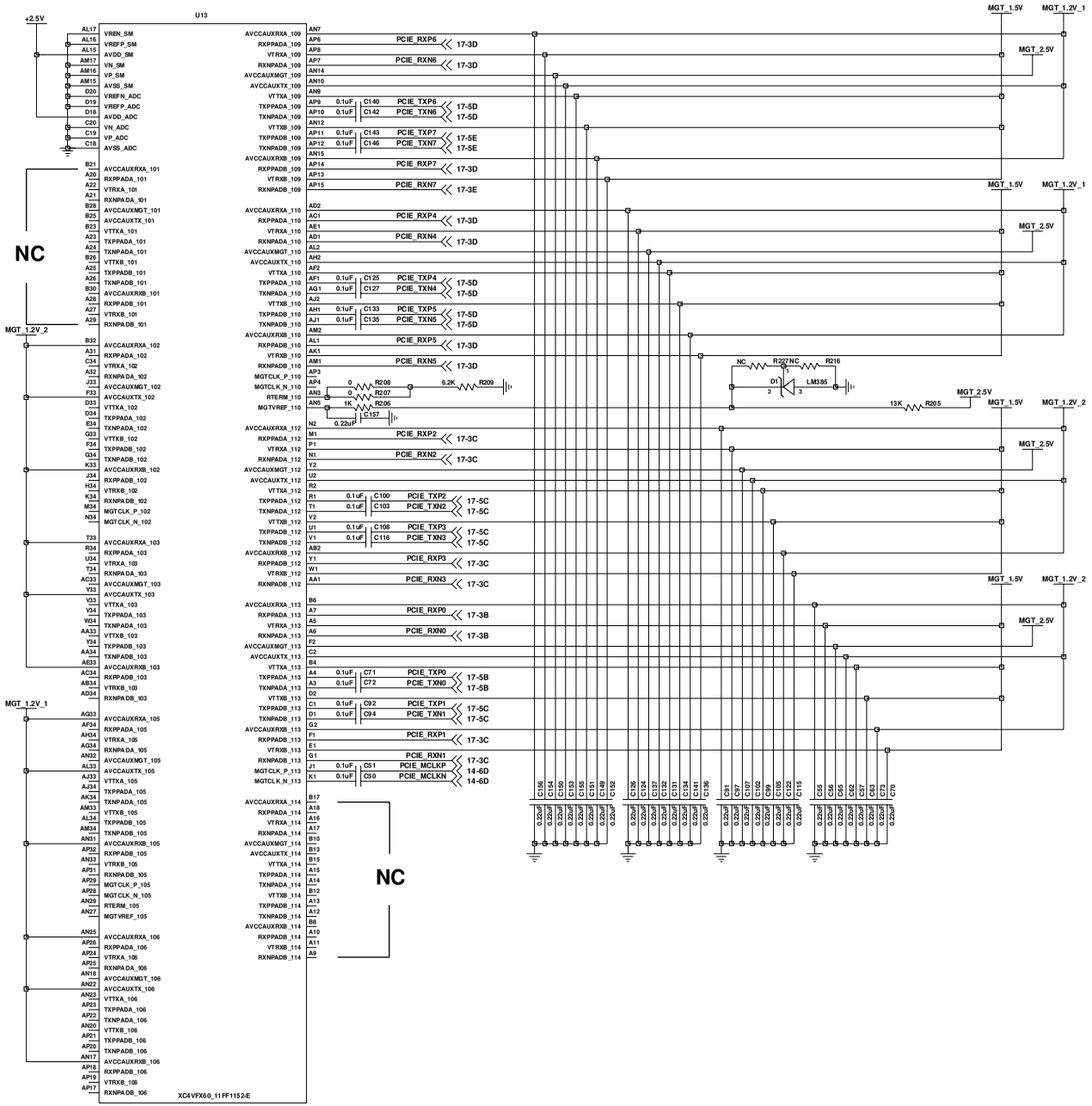

SHEET	10
DRWN	
DATE	2007-04-23
CHECK	
APPD	
APPD DATE	
REF	
REMARK	

CHANGED

SYSMATE

DOC. NAME	IS4010E	DOC. NUMBER	

SHEET	9
DRWN	
DATE	2007-04-23
CHECK	
APPD	
APPD DATE	
REF	
REMARK	
CHANGED	

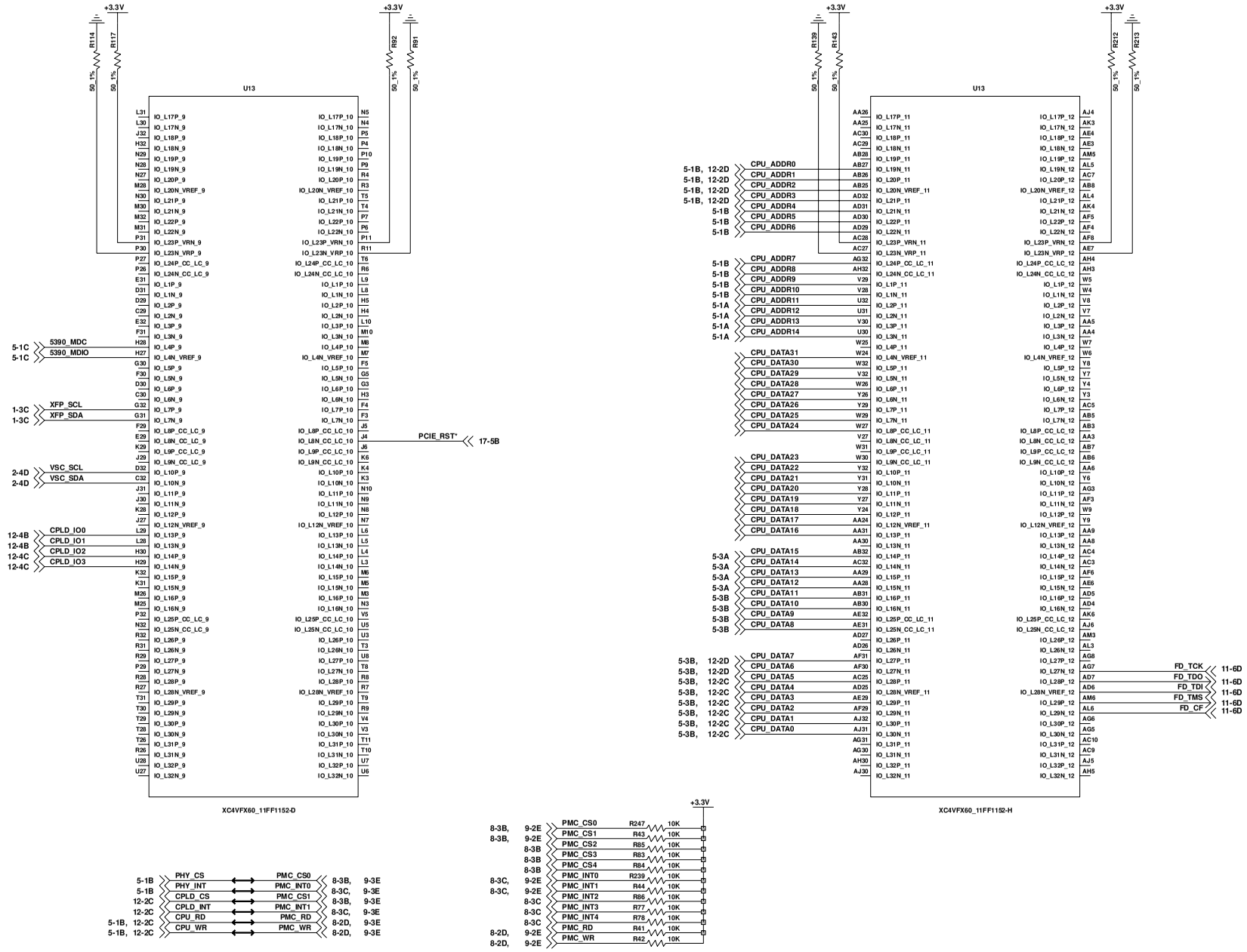

SYSMATE

DOC. NAME	IS4010E	DOC. NUMBER	

SHEET	8
DRWN	
DATE	2007-04-23
CHECK	
APPD	
APPD DATE	
REF	
REMARK	
CHANGED	

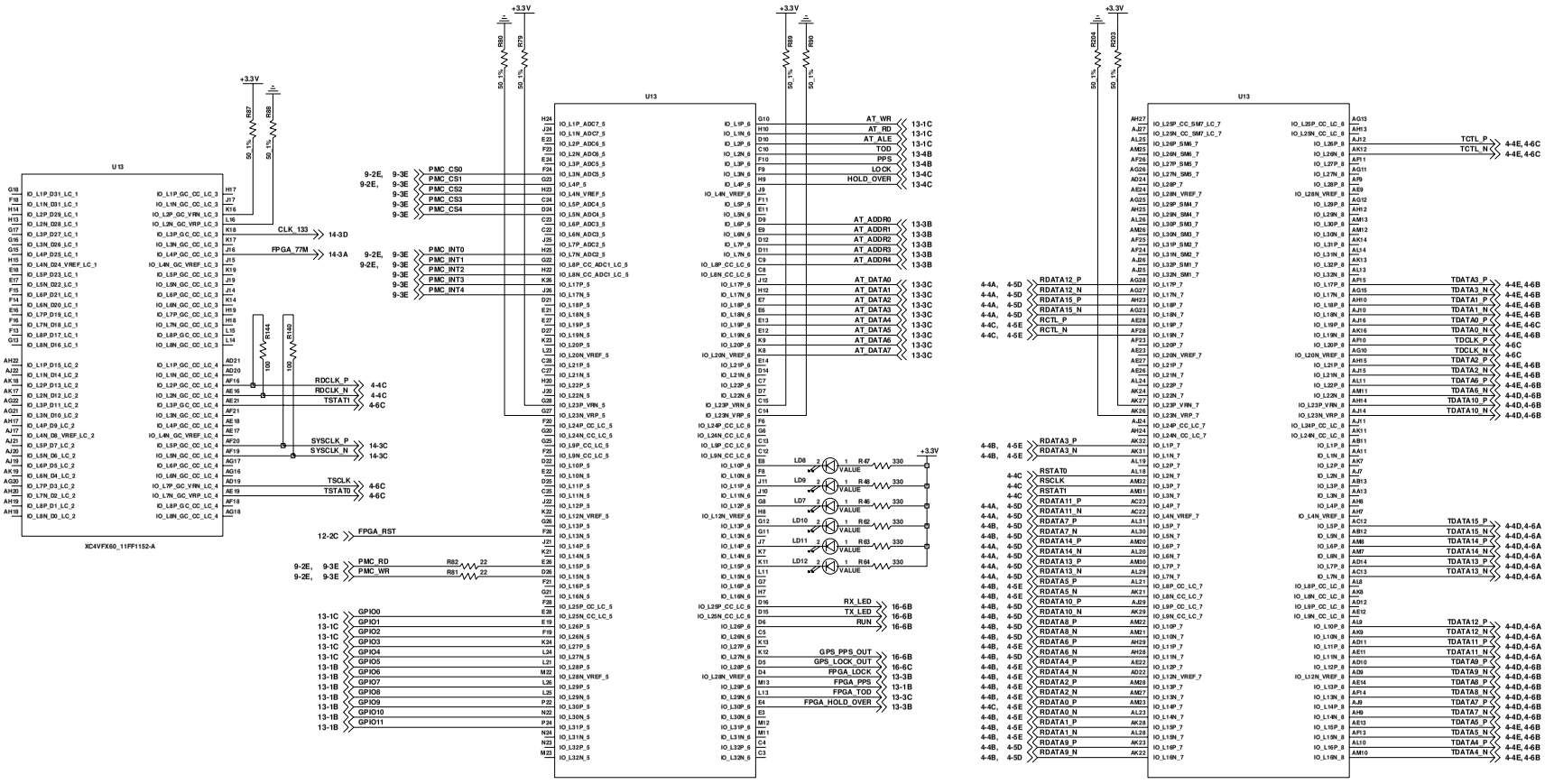

SYSMATE

DOC. NAME	IS4010E	DOC. NUMBER	

SHEET	7
DRWN	
DATE	2007-04-23
CHECK	
APPD	
APPD DATE	
REF	
REMARK	
CHANGED	

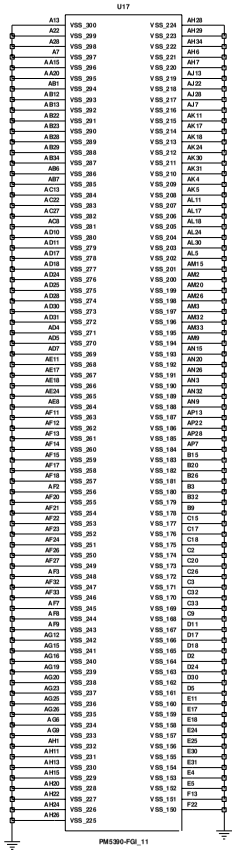

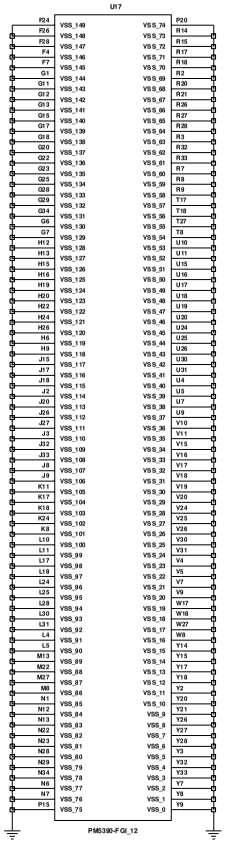

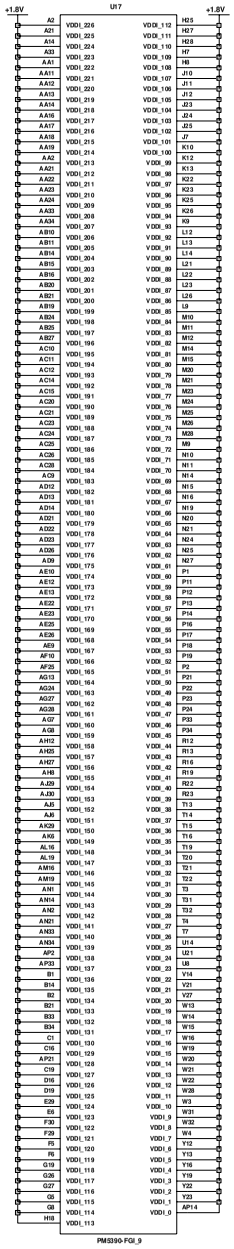

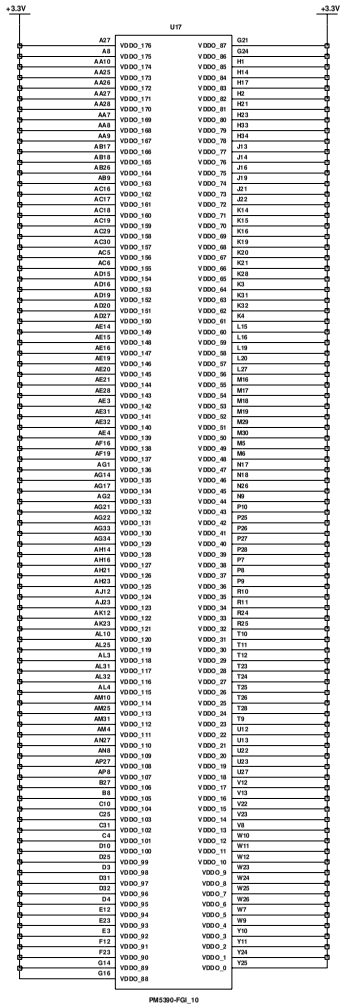

SYSMATE

DOC. NAME	IS4010E	DOC. NUMBER	

SHEET	6
DRWN	
DATE	2007-04-23
CHECK	
APPD	
APPD DATE	
REF	
REMARK	
CHANGED	

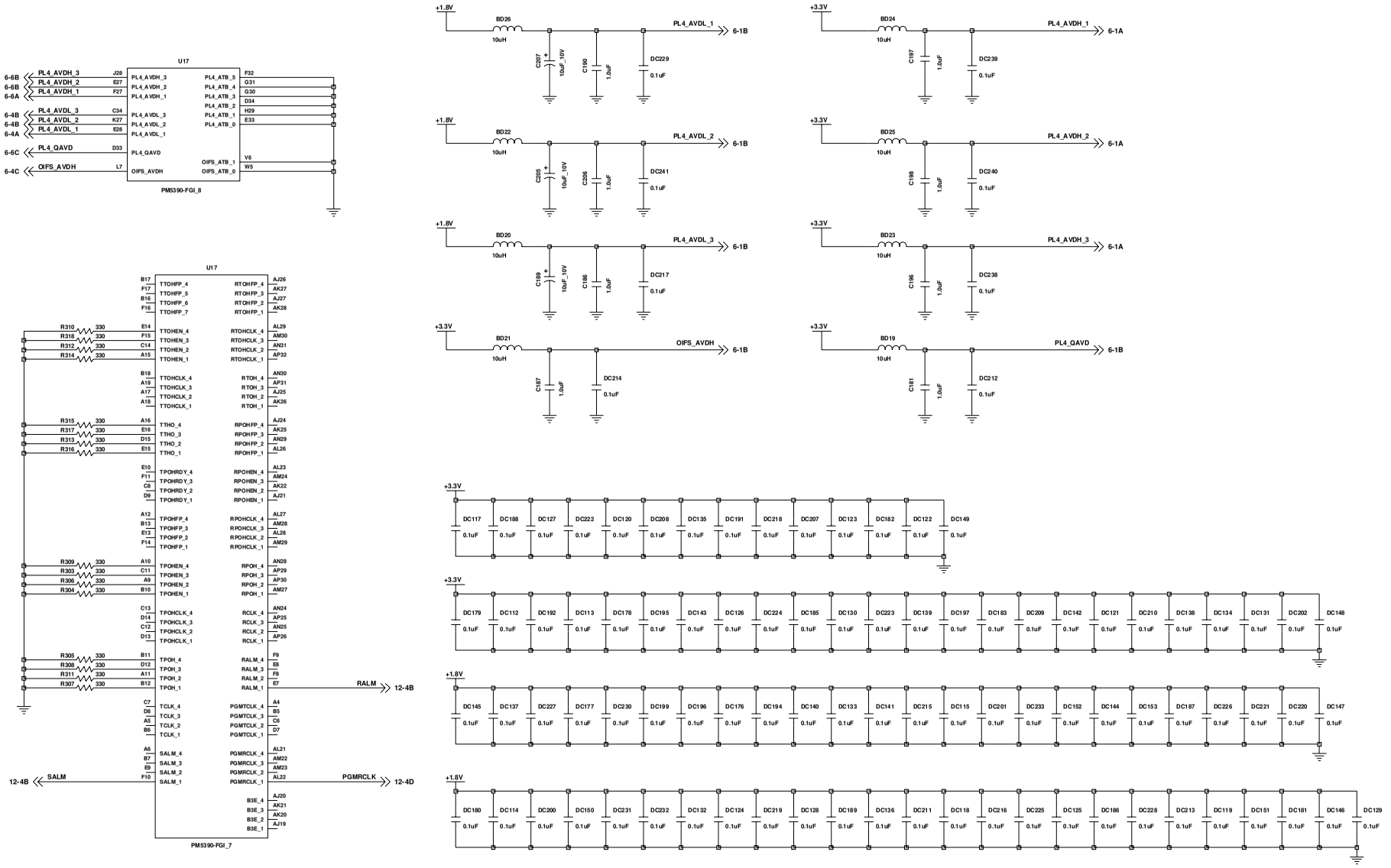

SYSMATE

DOC. NAME	IS4010E	DOC. NUMBER	

SHEET	5
DRWN	
DATE	2007-04-23
CHECK	
APPD	
APPD DATE	
REF	
REMARK	

CHANGED

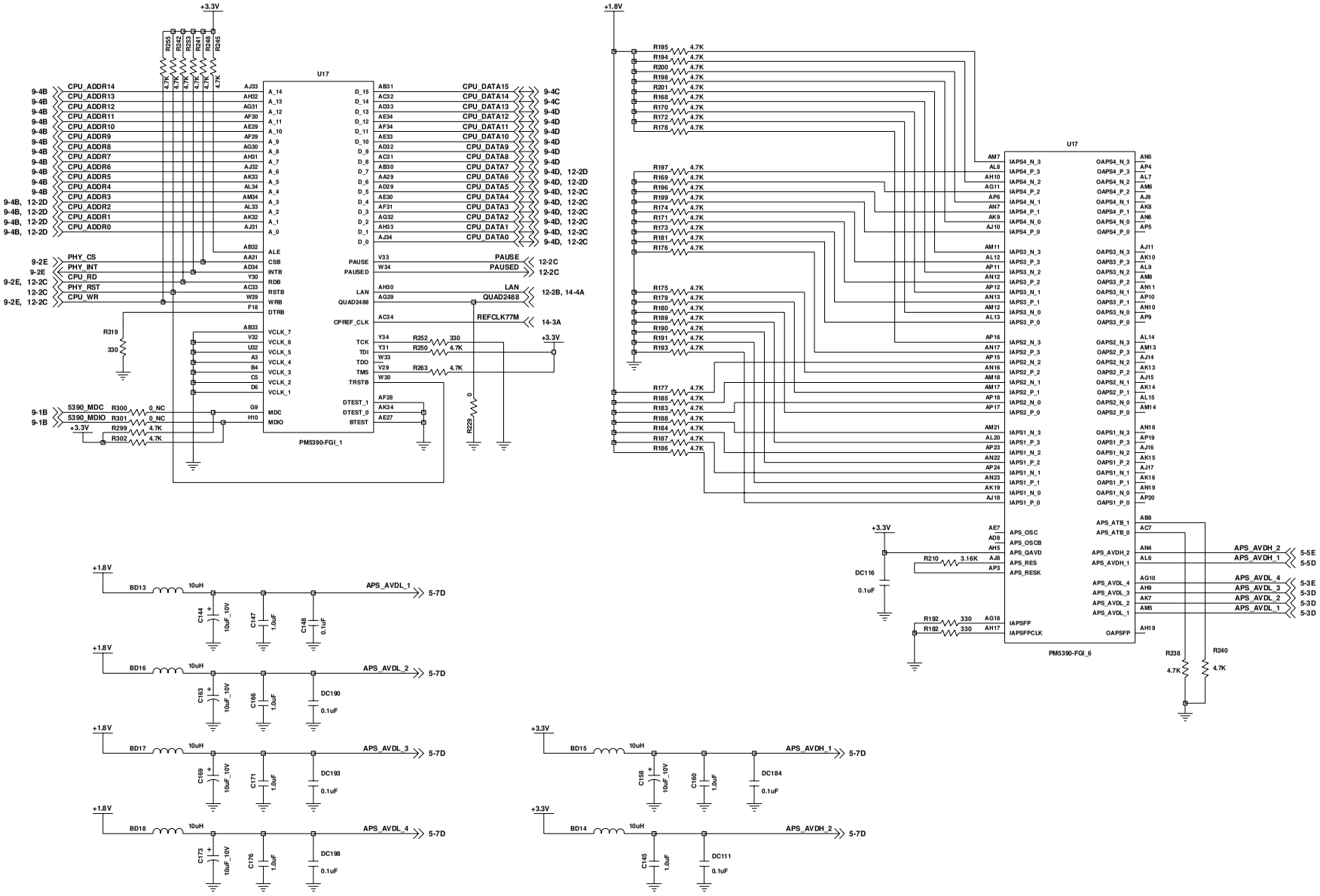

SYSMATE

DOC. NAME	IS4010E	DOC. NUMBER	

SHEET	4
DRWN	
DATE	2007-04-23
CHECK	
APPD	
APPD DATE	
REF	
REMARK	
CHANGED	

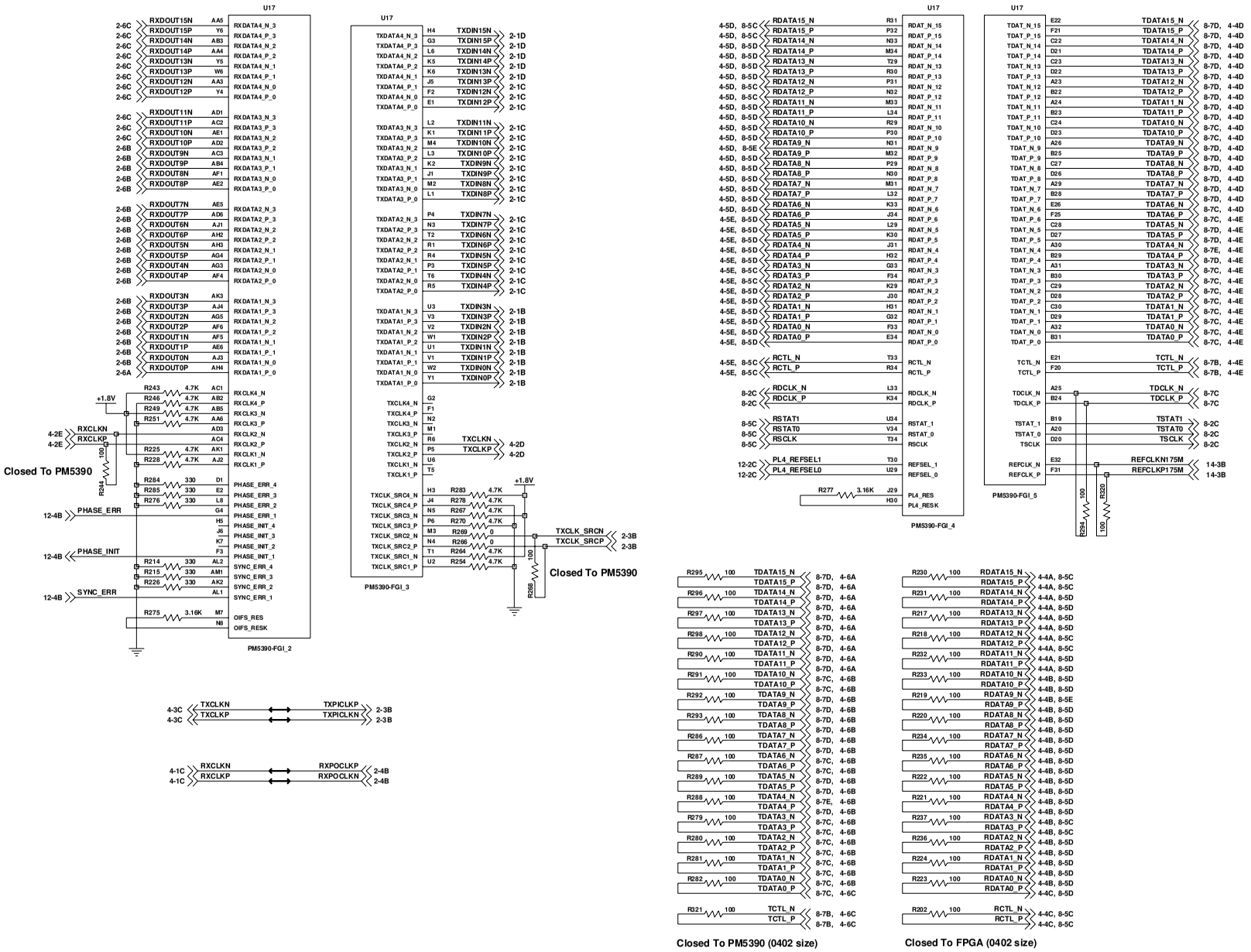

SYSMATE

DOC. NAME	IS4010E	DOC. NUMBER	

SHEET	3
DRWN	
DATE	2007-04-23
CHECK	
APPD	
APPD DATE	
REF	
REMARK	
CHANGED	

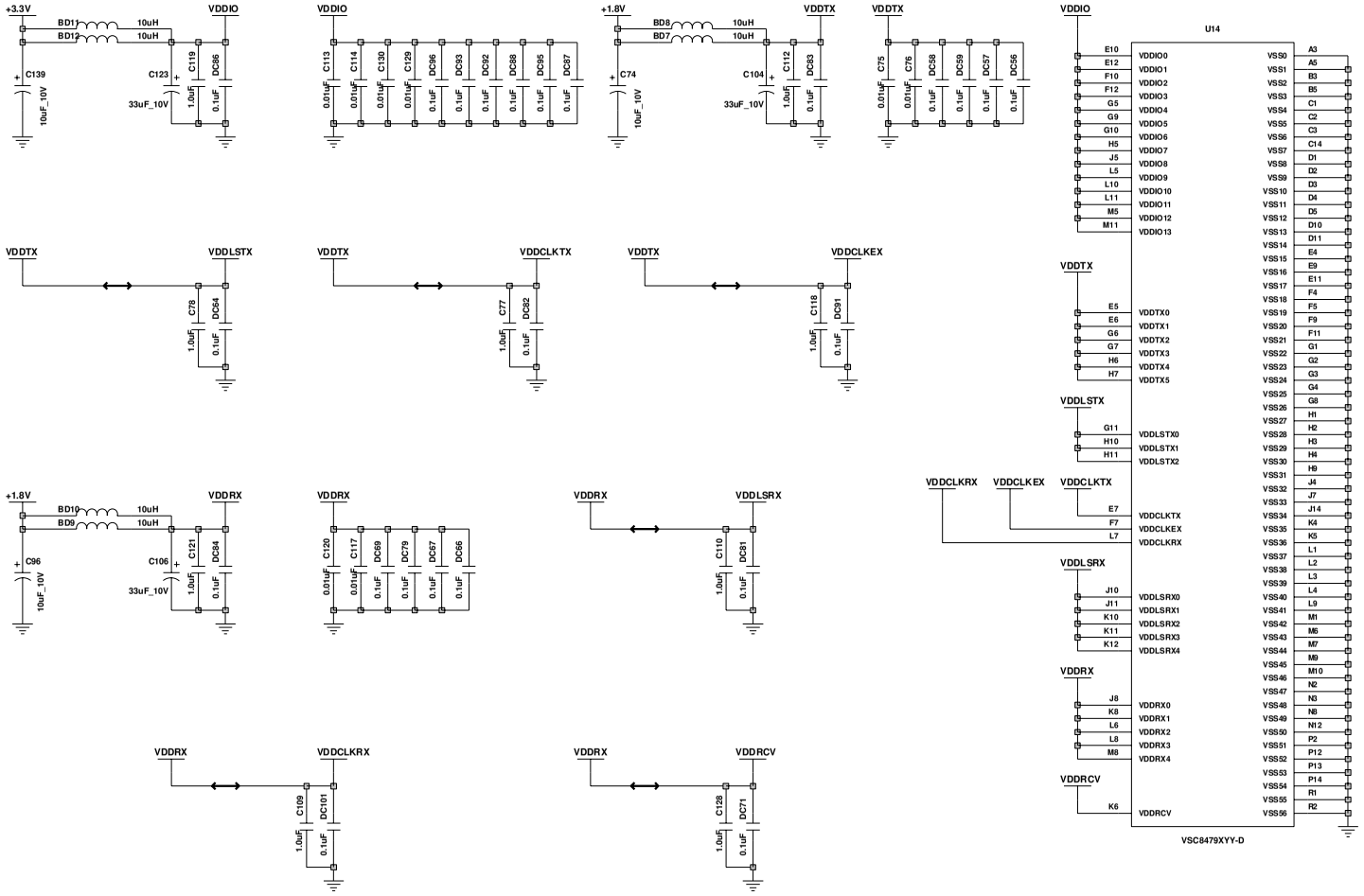

SYSMAYE

DOC. NAME	IS4010E	DOC. NUMBER	

SHEET	2
DRWN	
DATE	2007-04-23
CHECK	
APPD	
APPD DATE	
REF	
REMARK	
CHANGED	

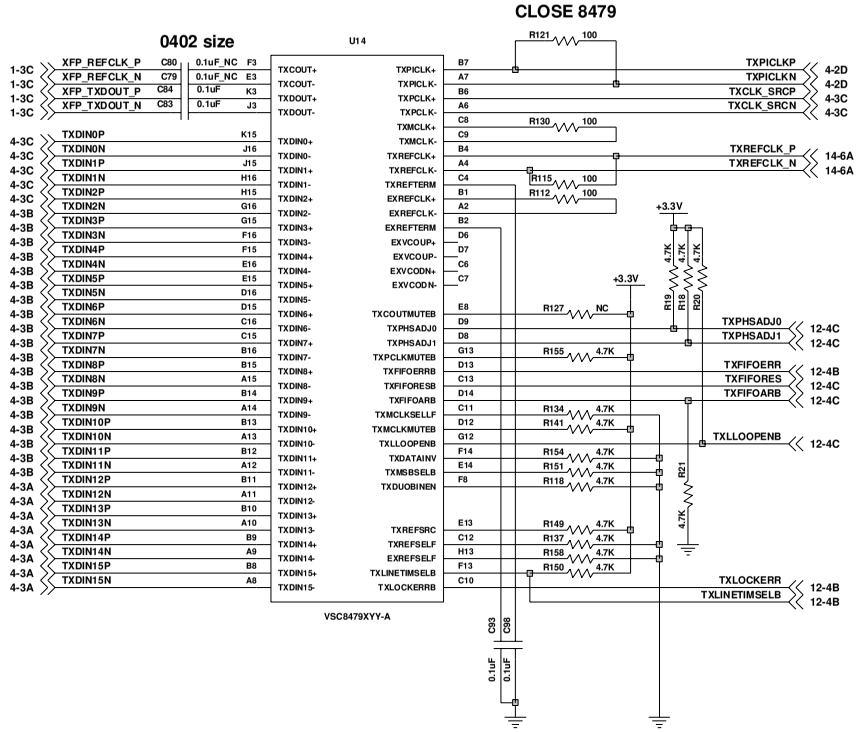

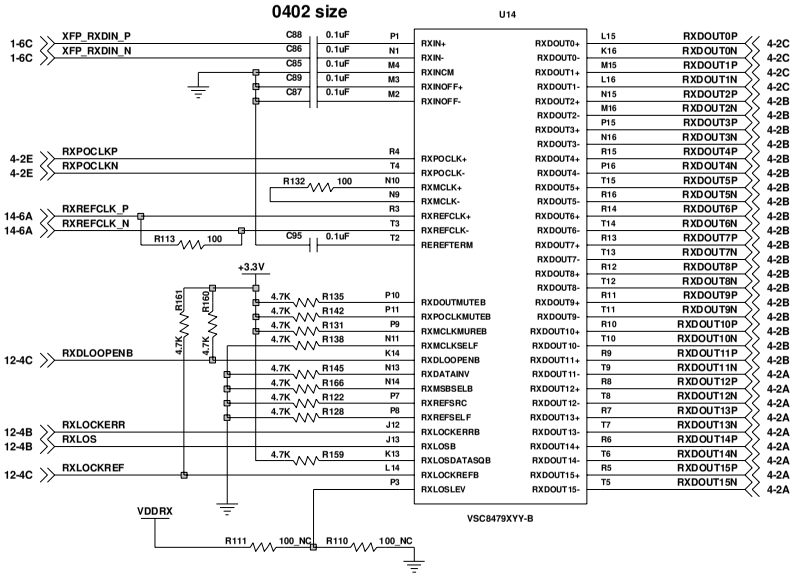

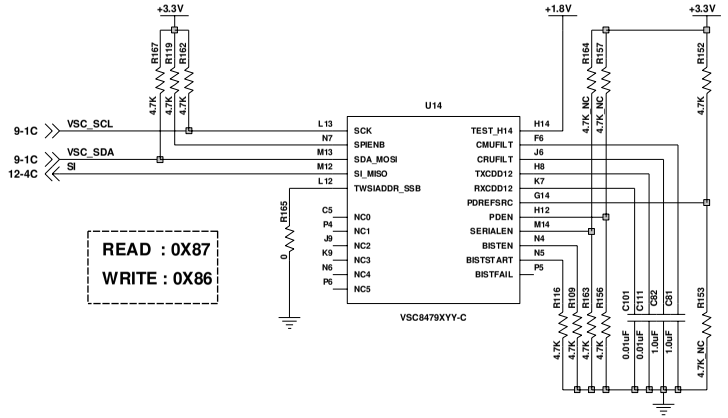

SYSMATE

DOC. NAME	IS4010E	DOC. NUMBER	

SHEET	1
DRWN	
DATE	2007-04-23
CHECK	
APPD	
APPD DATE	
REF	
REMARK	
CHANGED	

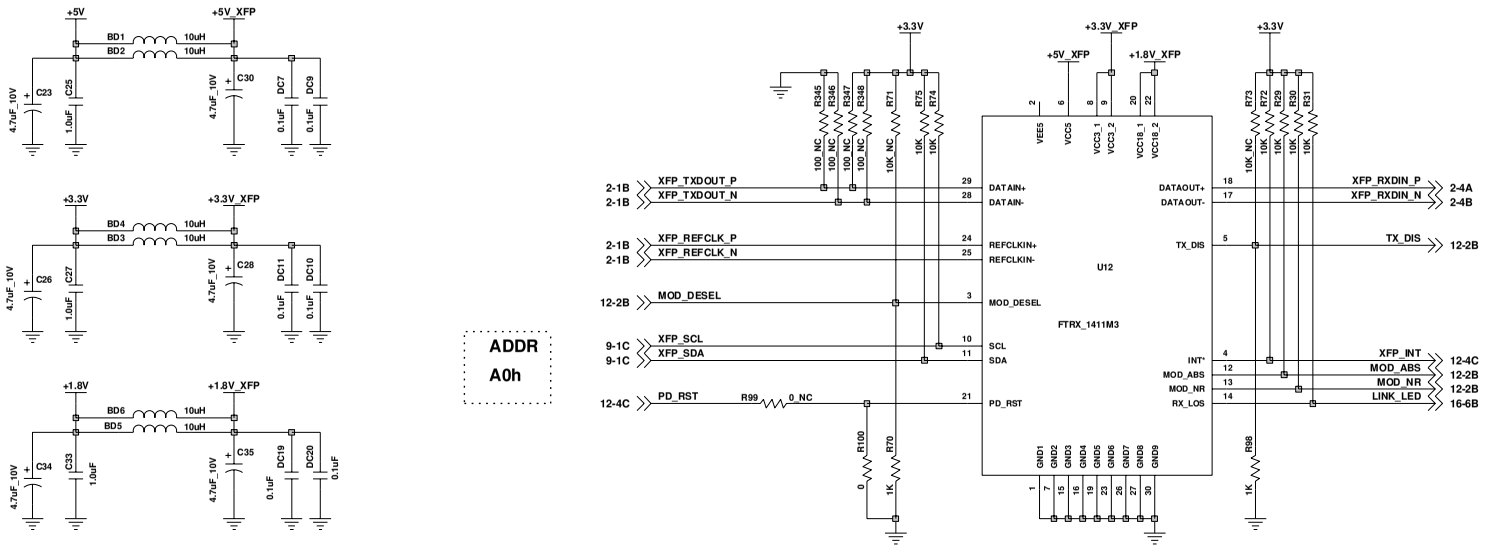

SYSMATE

IS4010E

DATE	UPDATE	REVISION
2007-05-03	XXXX-XX-XX	V2.0

BM TECH

Tel) 042-472- 6725
Fax) 042-472- 6720
bmt@bmteck.co.kr