Label Location

REVISIONS				
ZONE	REV	DESCRIPTION	APPD	DATE
	A	Release for production	BEN	8 MAY 09

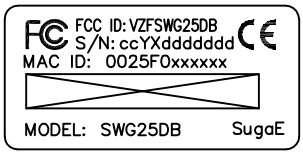

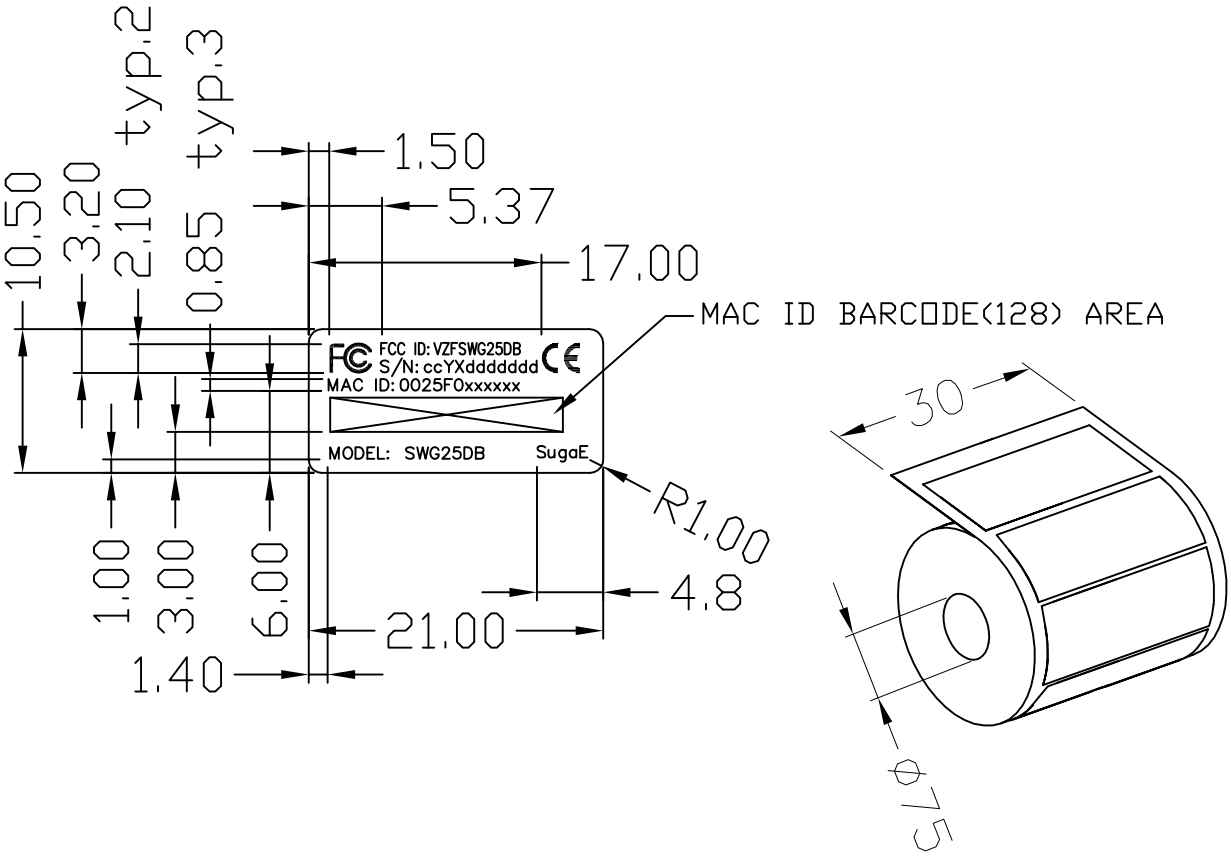

NOTES:

1. MATERIAL: 0.05mm THICKNESS POLYESTER FILM LABEL(FOR BRADY PRINTER 600).
2. THE LABEL IS PRINTED BY PRODUCTION.
3. FINISH: POLISHED.
4. RIBBON TYPE: IMTL, RIBBON RICOH B110C.
5. THE PART NEED BE RoHS COMPLIANT.
6. SUPPLIER LETTER OF SELF-DECLARATION ANF RoHS TESTING REPORT MUST BE PRESENT ALONG WITH FIRST ARTICLE SUBMISSION.

QTY

TOLERANCES
UNLESS OTHERWISE SPECIFIED
DIMENSIONS ARE IN MM
DECIMALS ANGULAR
.X ± 0.25 ± 1°
.XX ± 0.13
DO NOT SCALE
IF IN DOUBT ASK

WARNING

THIS DOCUMENT IS THE PROPERTY OF SUGA ELECTRONICS OR ITS CLIENTS AND CONTAINS CONFIDENTIAL AND TRADE SECRET INFORMATION OF SUGA ELECTRONICS OR ITS CLIENTS.

MODEL NO SWG25DB		SUGA ELECTRONICS LTD.	
PART NO			
DWN BEN NG	DATE 8 MAY 2009	TITLE Product label, SWG25DB	
CKD	DATE		
APPD	DATE		
CAD FILENAME Product label SWG25DB.dwg		SCALE 2 : 1	DWG NO
SHEET 1 OF 1	REV A		