Release version: **Released by:** **Release date:**

DATE	Schematic version	PCB version	Description	Reason	Revisor
20071226					
			<1> Delete dummy load circuit <2>C1342 change to 0.1uF <3> R1337 chang to FB inductor GLFR1608T4R7M-LR <4> Delete R1211 , Q1201 ,R1213 <5>R1215,R1216,R1229,R1217,R1218, are changed to 100 OHM <7> Add C1,C2,C3,C4,C5,C6,C10,C8,C9,C11 for improve the EMI issue. <8> Remove X1301 R1318,R1315 and C1329 <9> Add C12 and C13 <10> Remove D1401 <11>C1121 ,C1122 are changed to 100PF <12>Remove R1409		
20080110					
			<1> Delete L1 and add R1, R2 <2> Delete R1321,R1310,R1311		

DC_ED_I1035_Main_Sch_V1 020071122-A15-jacky2007.sch-1 - Mon May 26 10:46:17 2008

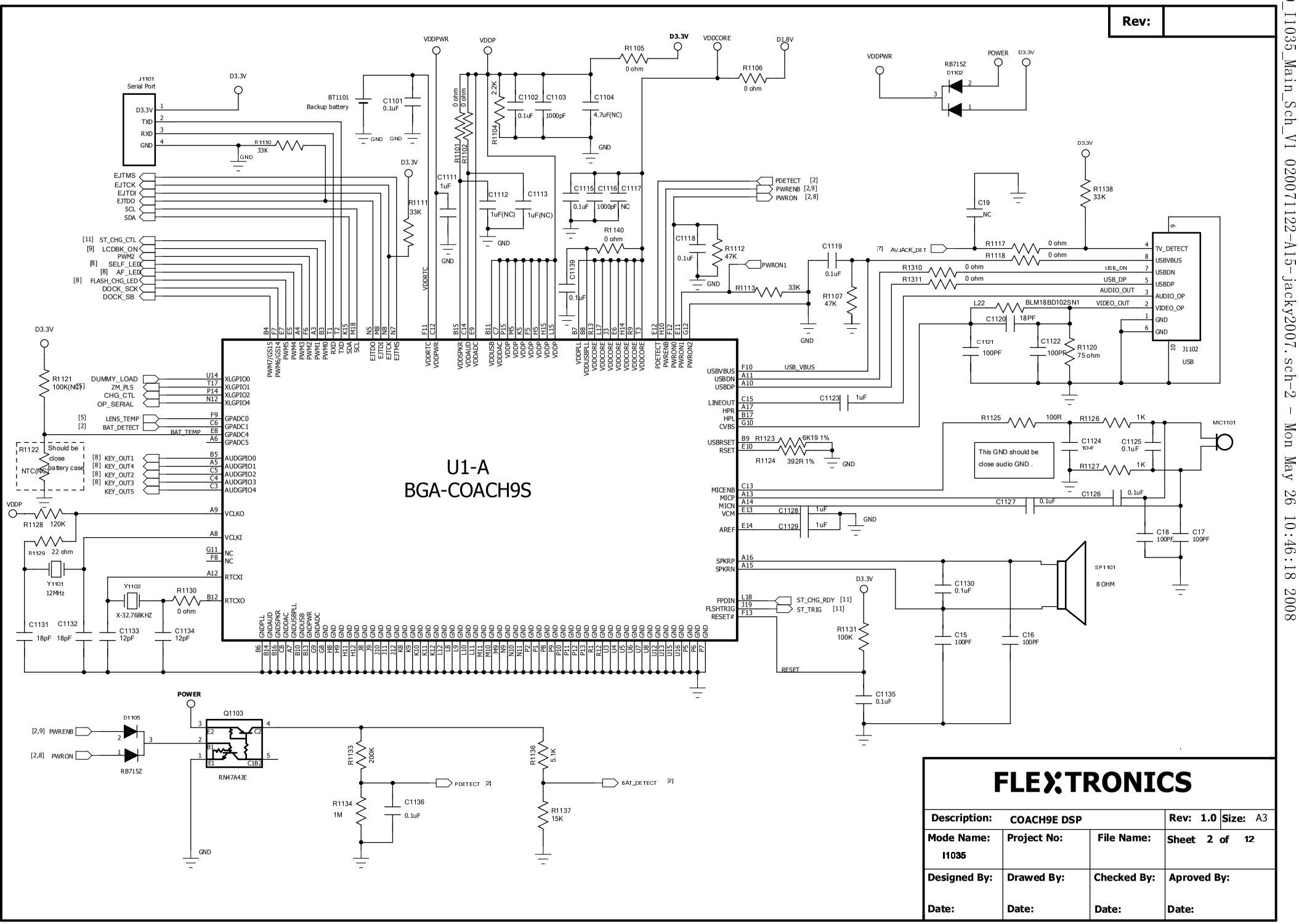

DC_ED_I1035_Main_Sch_V1 020071122-A15-jacky2007.sch-2 - Mon May 26 10:46:18 2008

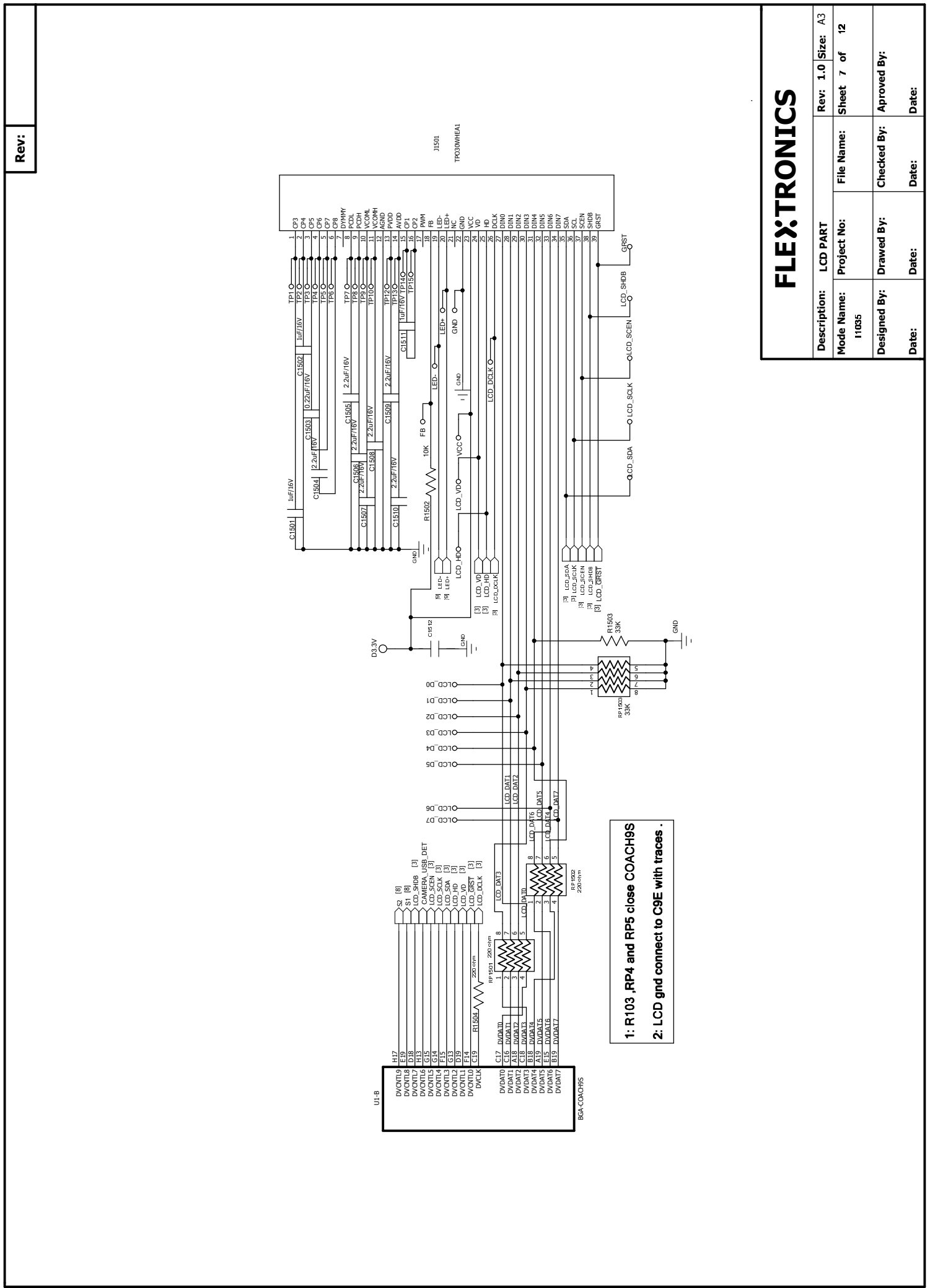
Rev:
FLEXTRONICS
Description: LCD PART
Rev: 1.0
Size: A3
Mode Name: I1035
Project No:
File Name:
Sheet 7 of 12
Designed By:
Drawed By:
Checked By:
Aproved By:
Date:
Date:
Date:
Date:
J1501
TPD30WHEA1
U1-B
BGA-COACH9S
1: R103 ,RP4 and RP5 close COACH9S
2: LCD gnd connect to C9E with traces .

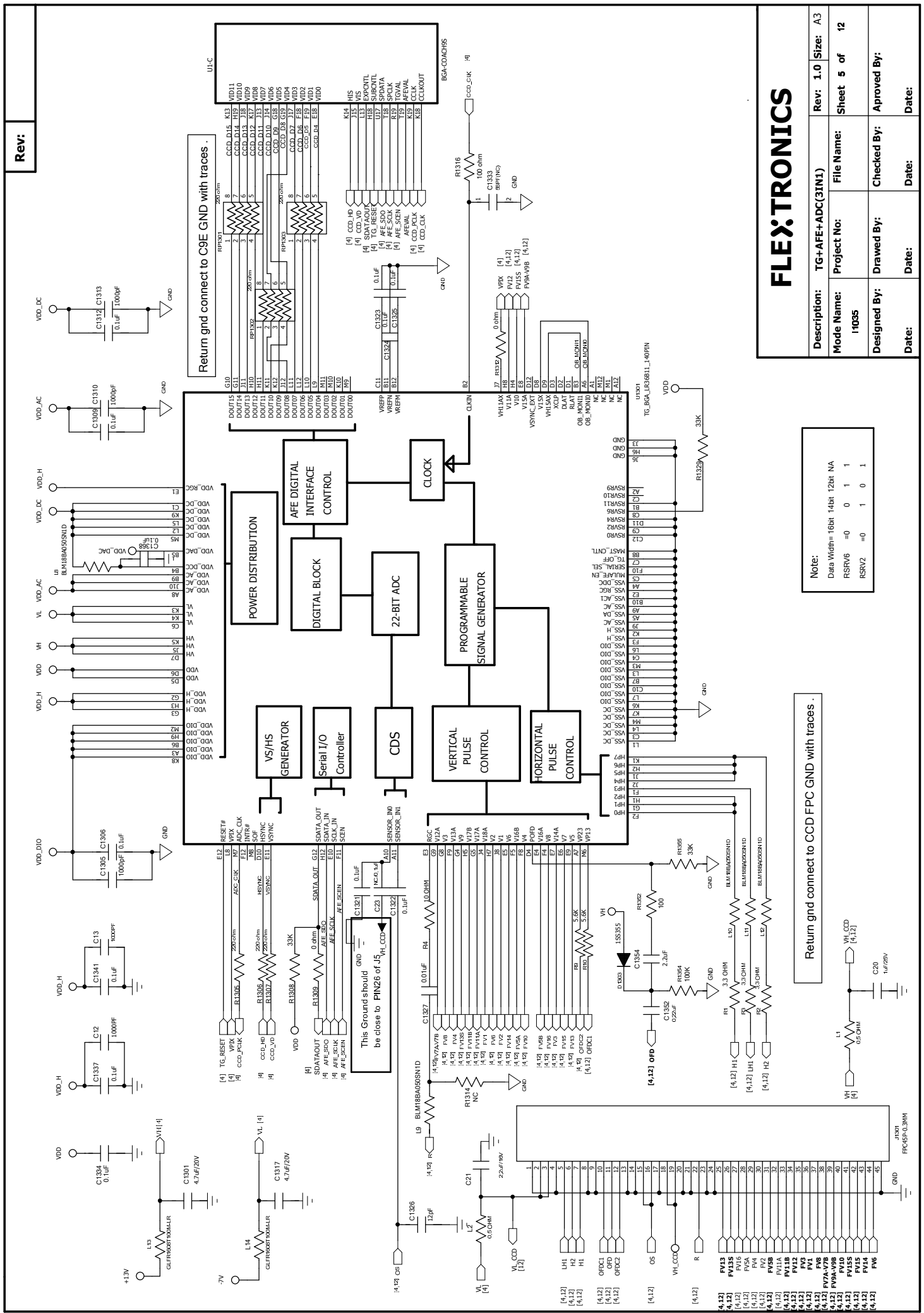
Rev:
FLEXTRONICS
Description: TG+AFE+ADC(3IN1)
Rev: 1.0
Size: A3
Mode Name: I1035
Project No:
File Name:
Sheet 5 of 12
Designed By:
Drawed By:
Checked By:
Aproved By:
Date:
Date:
Date:
Date:
Return gnd connect to C9E GND with traces .
Return gnd connect to CCD FPC GND with traces .
Note:
Data Width= 16bit 14bit 12bit NA
RSRV6 =0 0 1 1
RSRV2 =0 1 0 1
POWER DISTRIBUTION
AFE DIGITAL INTERFACE CONTROL
CLOCK
DIGITAL BLOCK
22-BIT ADC
PROGRAMMABLE SIGNAL GENERATOR
VS/HS GENERATOR
Serial I/O Controller
CDS
VERTICAL PULSE CONTROL
HORIZONTAL PULSE CONTROL
U1-C
BGA-COACH95
U1301
TG_BGA_LR36811_140PIN
J1301
FPC-45P-0.3MM
This Ground should be close to PIN26 of J5

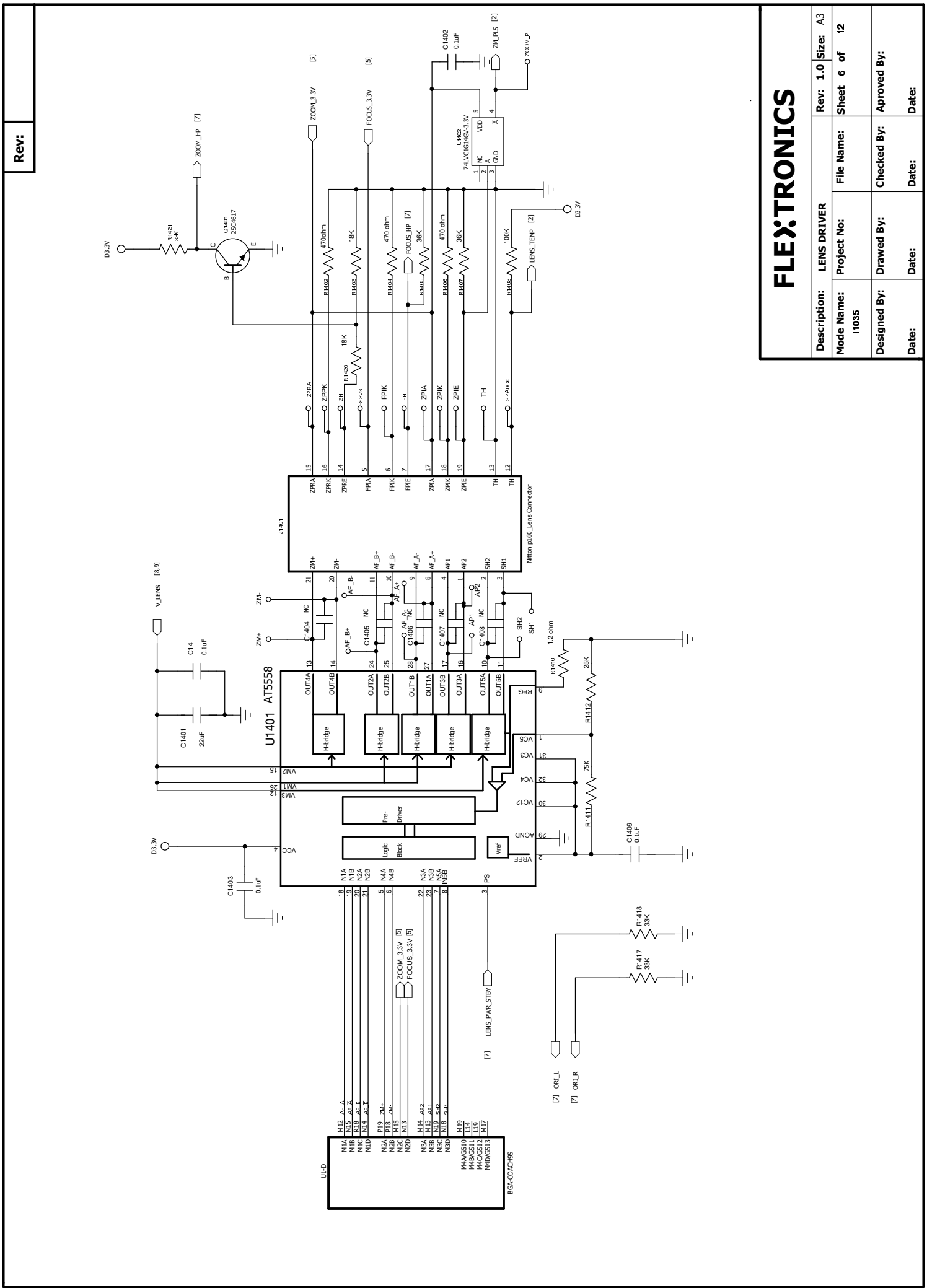
Rev:
FLEXTRONICS
Description: LENS DRIVER
Rev: 1.0
Size: A3
Mode Name: I1035
Project No:
File Name:
Sheet 6 of 12
Designed By:
Drawed By:
Checked By:
Aproved By:
Date:
Date:
Date:
Date:
U1401 AT5558
J1401
Nitton p160_Lens Connector
U1-D
BGA-COACH95
U1402 74LVC1G14GV-3.3V
Q1401 2SC4617
ZOOM_HP [7]
FOCUS_HP [7]
LENS_TEMP [2]
ZOOM_PI [2]
FOCUS_PI [2]
ZOOM_3.3V [5]
FOCUS_3.3V [5]
V_LENS [8,9]
LENS_PWR_STBY [7]
ORI_L [7]
ORI_R [7]
D3.3V
R1421 33K
R1402 470ohm
R1403 18K
R1404 470 ohm
R1405 36K
R1406 470 ohm
R1407 36K
R1408 100K
R1420 18K
R1410 1.2 ohm
R1412 25K
R1411 75K
R1418 33K
R1417 33K
C1401 22uF
C14 0.1uF
C1402 0.1uF
C1403 0.1uF
C1404 NC
C1405 NC
C1406 NC
C1407 NC
C1408 NC
C1409 0.1uF
H-bridge
Pre-Driver
Logic Block
Vref

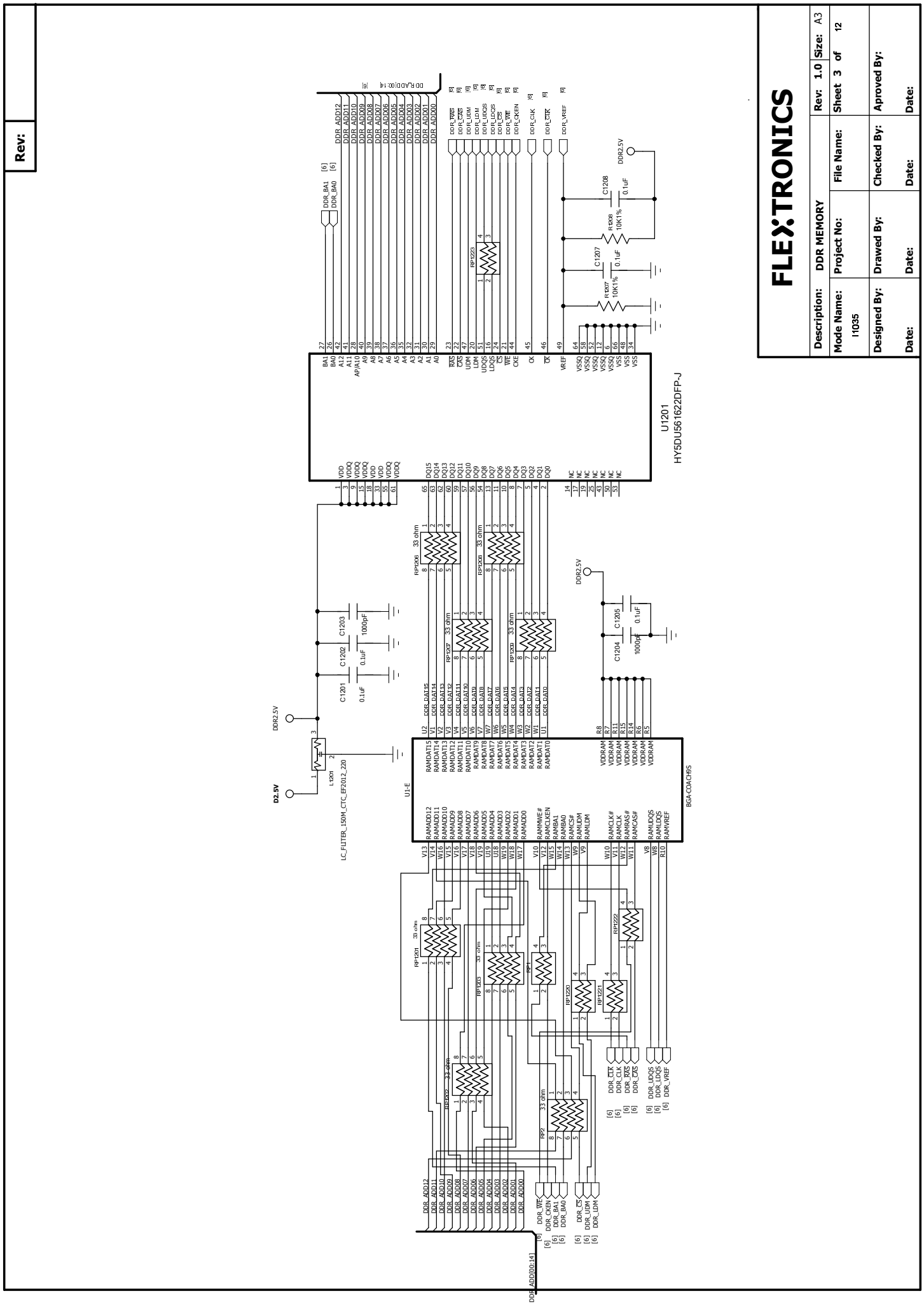
Rev:
FLEXTRONICS
Description: DDR MEMORY
Rev: 1.0
Size: A3
Mode Name: I1035
Project No:
File Name:
Sheet 3 of 12
Designed By:
Drawed By:
Checked By:
Aproved By:
Date:
Date:
Date:
Date:
U1201
HY5DU561622DFP-J
U1-E
BGA-COACH95
LC_FILTER_150M_CTC_EF2012_220
D2.5V
DDR2.5V

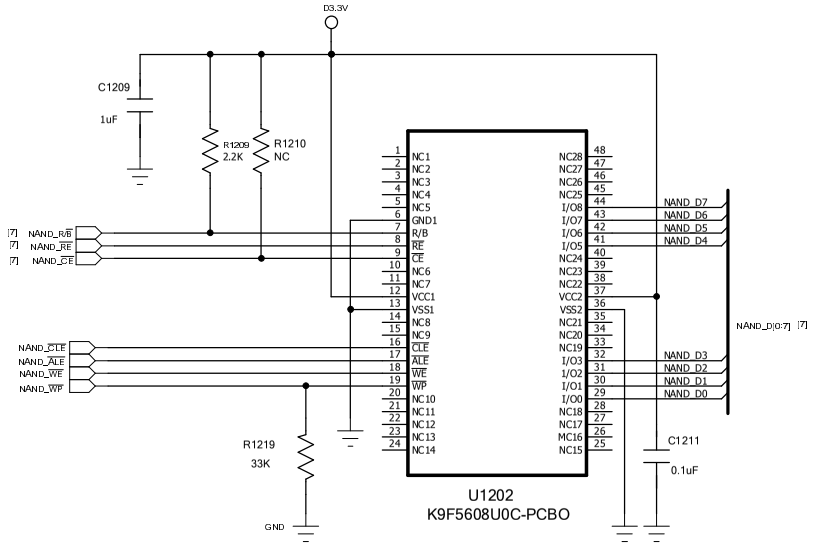

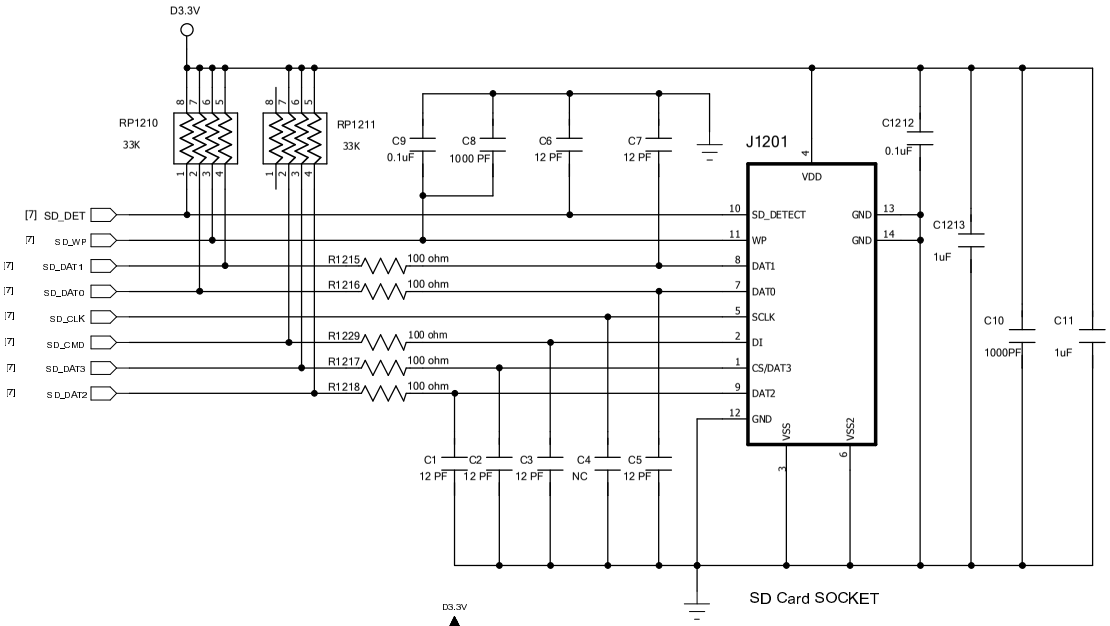

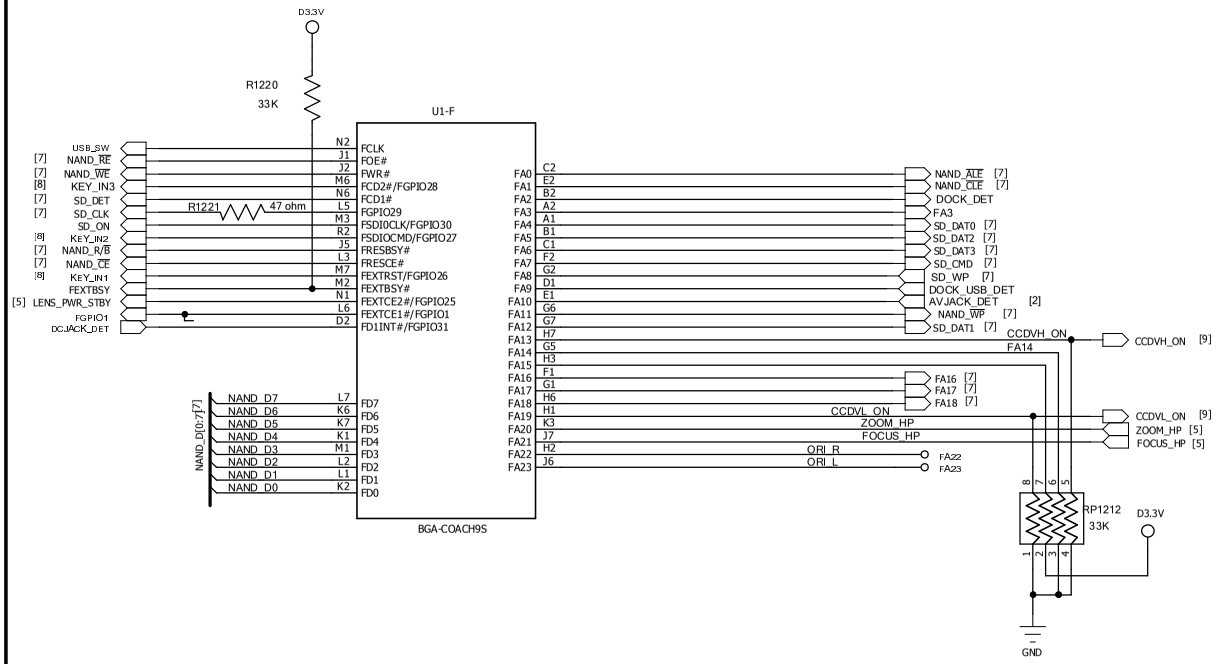

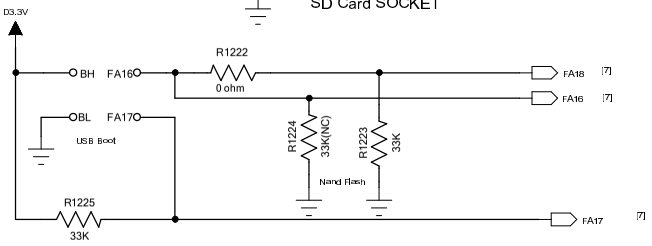

Short BH,FA16 and short BL,
FA17 will be set to USB Boot

Configuration PINS	FA15	FA16	FA17	FA18	FA19
USB Boot	1	1	0	1	0
Nand Flash	1	0	1	0	0

FLEXTRONICS

Description: NAND_FLASH& SD_CARD			Rev: 1.0	Size: A3
Mode Name: I1035	Project No:	File Name:	Sheet 4 of 12	
Designed By:	Drawed By:	Checked By:	Aproved By:	
Date:	Date:	Date:	Date:	

DC_ED_I1035_Main_Sch_V1 020071122-A15-jacky2007.sch-7 - Mon May 26 10:46:19 2008

Rev:

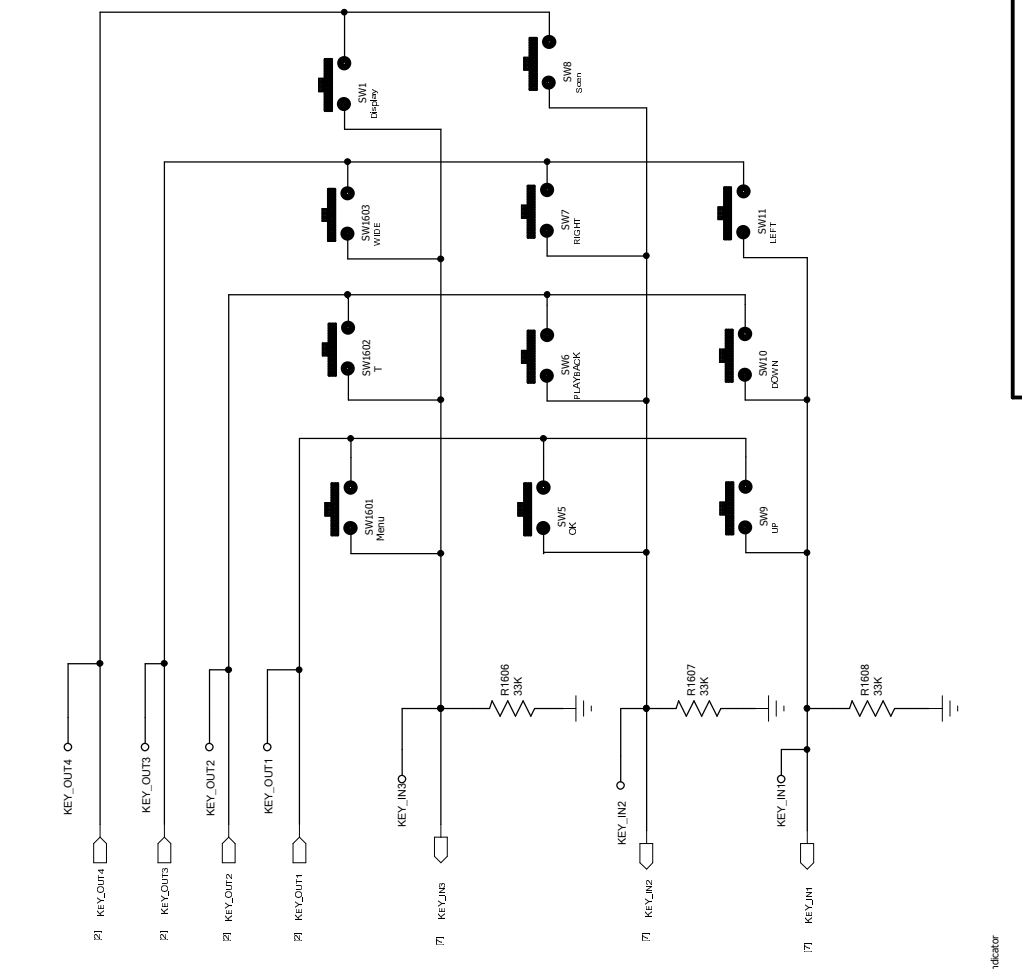

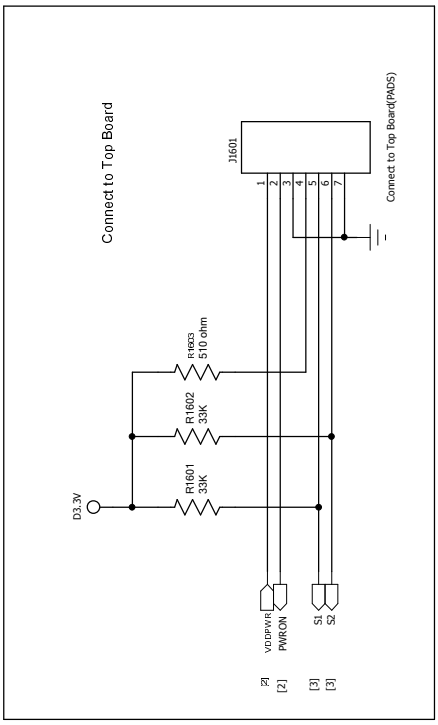

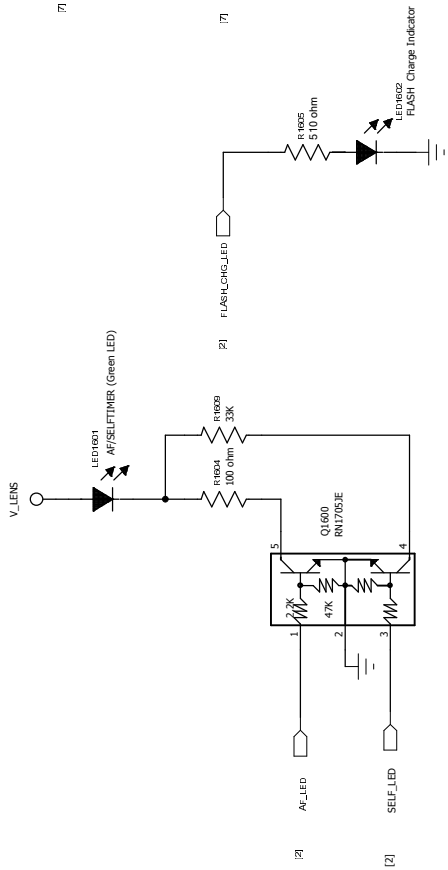

FLEXTRONICS			Rev: 1.0	Size: A3
Description: KEY PART		File Name:	Sheet 8 of 12	
Mode Name: I1035	Project No:			
Designed By: Date:	Drawed By: Date:	Checked By: Date:	Aproved By: Date:	

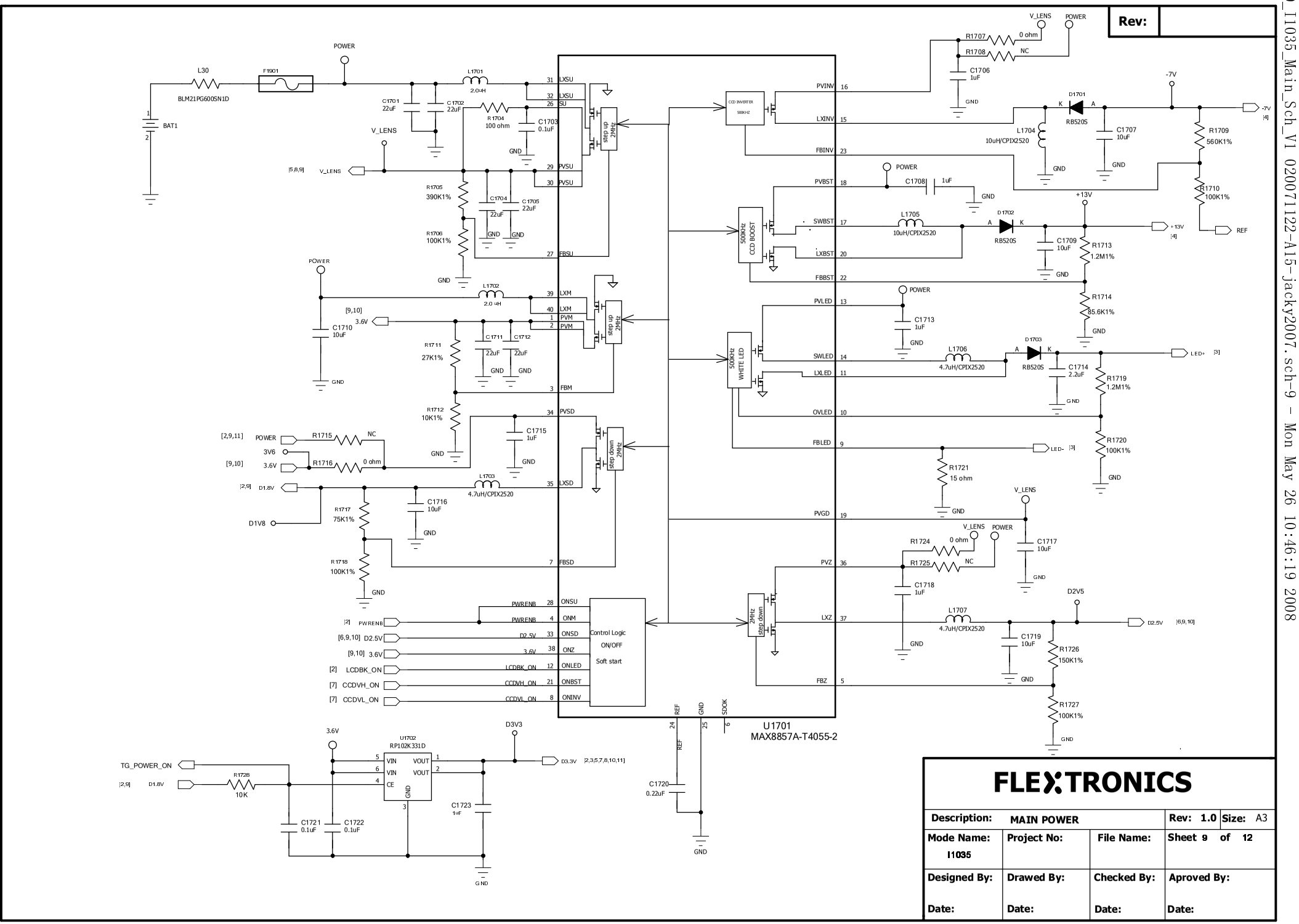

FLEXTRONICS

Description:	MAIN POWER		Rev: 1.0	Size: A3
Mode Name: I1035	Project No:	File Name:	Sheet 9 of 12	
Designed By:	Drawed By:	Checked By:	Aproved By:	
Date:	Date:	Date:	Date:	

DC_ED_I1035_Main_Sch_V1 020071122-A15-jacky2007.sch-9 - Mon May 26 10:46:19 2008

Rev:

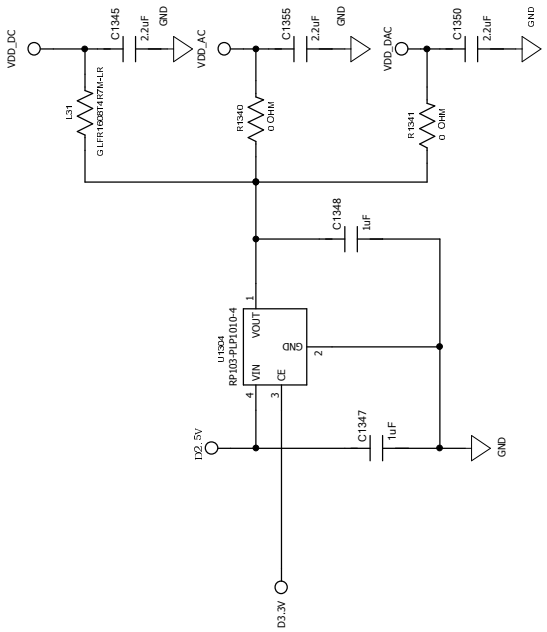

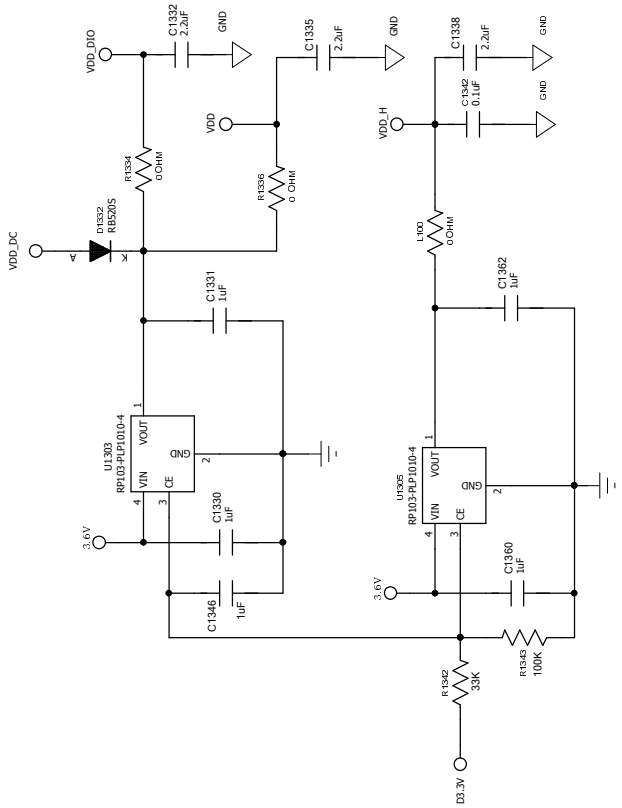

FLEXTRONICS			
Description: TG POWER		Rev: 1.0	Size: A3
Mode Name: I1035	Project No:	File Name:	Sheet 10 of 12
Designed By: Date:	Drawed By: Date:	Checked By: Date:	Aproved By: Date:

Rev:

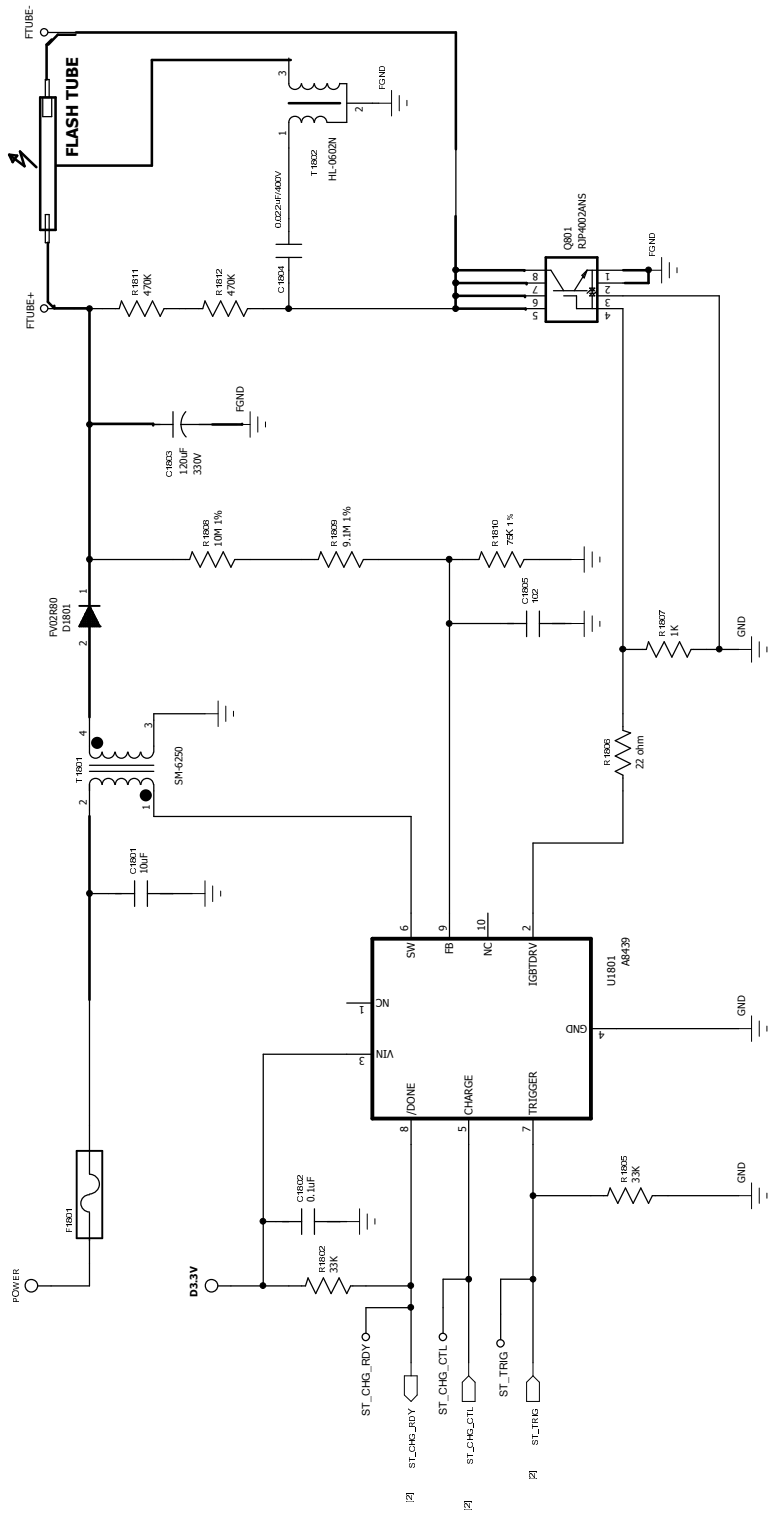

FLEXTRONICS			Rev: 1.0	Size: A3
Description: STROBE		File Name:	Sheet 11 of 12	
Mode Name: I1035	Project No:			
Designed By: Date:	Drawed By: Date:	Checked By: Date:	Aproved By: Date:	

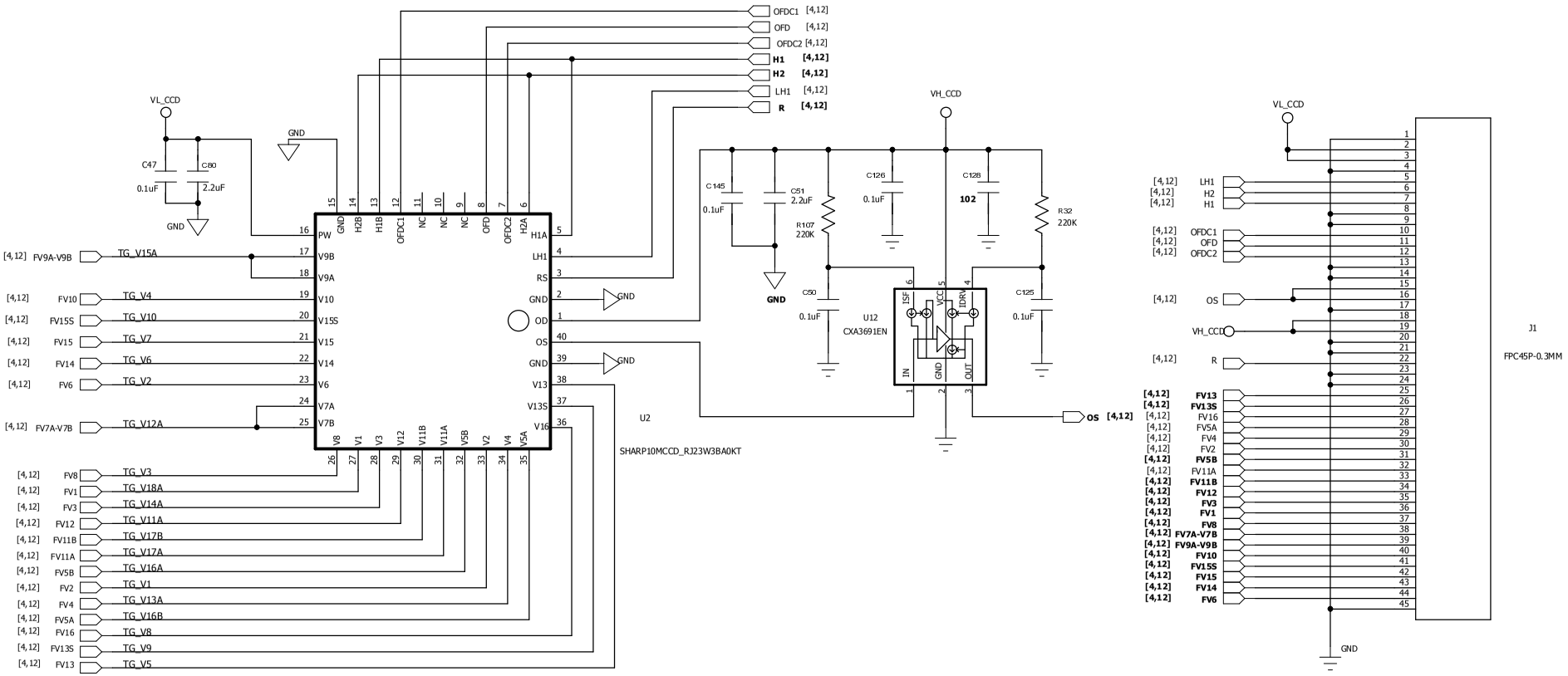

FLEXTRONICS			
Description: COACH9E DSP			**Rev:** 1.0 **Size:** A3
Mode Name: I1035	**Project No:**	**File Name:**	**Sheet** 12 of 12
Designed By: **Date:**	**Drawed By:** **Date:**	**Checked By:** **Date:**	**Aproved By:** **Date:**

DC_ED_I1035_Main_Sch_V1 020071122-A15-jacky2007.sch-12 - Mon May 26 10:46:20 2008