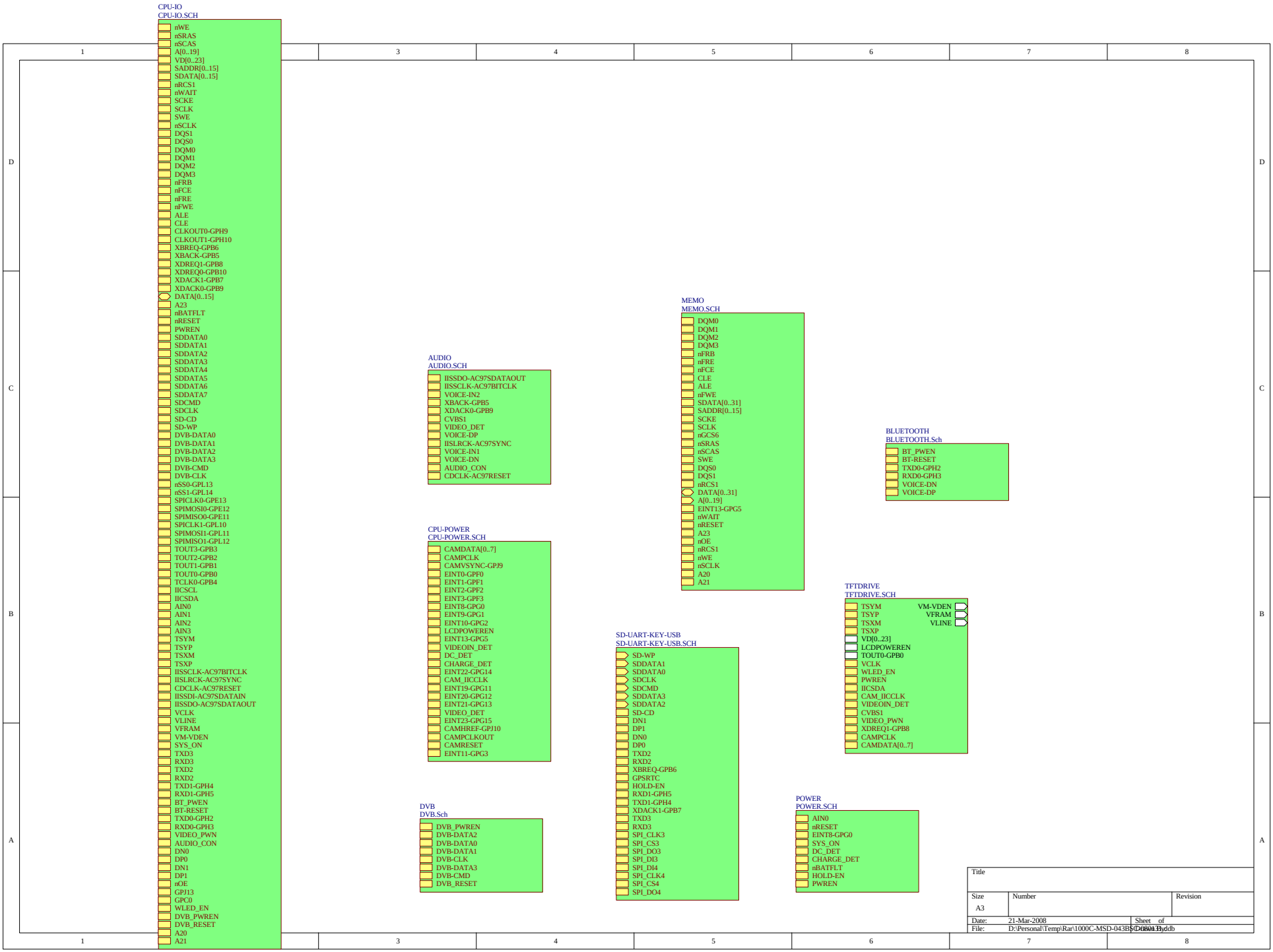
CPU-IO
CPU-IO.SCH
nWE
nSRAS
nSCAS
A[0..19]
VD[0..23]
SADDR[0..15]
SDATA[0..15]
nRCS1
nWAIT
SCKE
SCLK
SWE
nSCLK
DQS1
DQS0
DQM0
DQM1
DQM2
DQM3
nFRB
nFCE
nFRE
nFWE
ALE
CLE
CLKOUT0-GPH9
CLKOUT1-GPH10
XBREQ-GPB6
XBACK-GPB5
XDREQ1-GPB8
XDREQ0-GPB10
XDACK1-GPB7
XDACK0-GPB9
DATA[0..15]
A23
nBATFLT
nRESET
PWREN
SDDATA0
SDDATA1
SDDATA2
SDDATA3
SDDATA4
SDDATA5
SDDATA6
SDDATA7
SDCMD
SDCLK
SD-CD
SD-WP
DVB-DATA0
DVB-DATA1
DVB-DATA2
DVB-DATA3
DVB-CMD
DVB-CLK
nSS0-GPL13
nSS1-GPL14
SPICLK0-GPE13
SPIMOSI0-GPE12
SPIMISO0-GPE11
SPICLK1-GPL10
SPIMOSI1-GPL11
SPIMISO1-GPL12
TOUT3-GPB3
TOUT2-GPB2
TOUT1-GPB1
TOUT0-GPB0
TCLK0-GPB4
IICSCL
IICSDA
AIN0
AIN1
AIN2
AIN3
TSYM
TSYP
TSXM
TSXP
IISSCLK-AC97BITCLK
IISLRCK-AC97SYNC
CDCLK-AC97RESET
IISSDI-AC97SDATAIN
IISSDO-AC97SDATAOUT
VCLK
VLINE
VFRAM
VM-VDEN
SYS_ON
TXD3
RXD3
TXD2
RXD2
TXD1-GPH4
RXD1-GPH5
BT_PWEN
BT-RESET
TXD0-GPH2
RXD0-GPH3
VIDEO_PWN
AUDIO_CON
DN0
DP0
DN1
DP1
nOE
GPJ13
GPC0
WLED_EN
DVB_PWREN
DVB_RESET
A20
A21
AUDIO
AUDIO.SCH
IISSDO-AC97SDATAOUT
IISSCLK-AC97BITCLK
VOICE-IN2
XBACK-GPB5
XDACK0-GPB9
CVBS1
VIDEO_DET
VOICE-DP
IISLRCK-AC97SYNC
VOICE-IN1
VOICE-DN
AUDIO_CON
CDCLK-AC97RESET
CPU-POWER
CPU-POWER.SCH
CAMDATA[0..7]
CAMPCLK
CAMVSYNC-GPJ9
EINT0-GPF0
EINT1-GPF1
EINT2-GPF2
EINT3-GPF3
EINT8-GPG0
EINT9-GPG1
EINT10-GPG2
LCDPOWEREN
EINT13-GPG5
VIDEOIN_DET
DC_DET
CHARGE_DET
EINT22-GPG14
CAM_IICCLK
EINT19-GPG11
EINT20-GPG12
EINT21-GPG13
VIDEO_DET
EINT23-GPG15
CAMHREF-GPJ10
CAMPCLKOUT
CAMRESET
EINT11-GPG3
DVB
DVB.Sch
DVB_PWREN
DVB-DATA2
DVB-DATA0
DVB-DATA1
DVB-CLK
DVB-DATA3
DVB-CMD
DVB_RESET
MEMO
MEMO.SCH
DQM0
DQM1
DQM2
DQM3
nFRB
nFRE
nFCE
CLE
ALE
nFWE
SDATA[0..31]
SADDR[0..15]
SCKE
SCLK
nGCS6
nSRAS
nSCAS
SWE
DQS0
DQS1
nRCS1
DATA[0..31]
A[0..19]
EINT13-GPG5
nWAIT
nRESET
A23
nOE
nRCS1
nWE
nSCLK
A20
A21
SD-UART-KEY-USB
SD-UART-KEY-USB.SCH
SD-WP
SDDATA1
SDDATA0
SDCLK
SDCMD
SDDATA3
SDDATA2
SD-CD
DN1
DP1
DN0
DP0
TXD2
RXD2
XBREQ-GPB6
GPSRTC
HOLD-EN
RXD1-GPH5
TXD1-GPH4
XDACK1-GPB7
TXD3
RXD3
SPI_CLK3
SPI_CS3
SPI_DO3
SPI_DI3
SPI_DI4
SPI_CLK4
SPI_CS4
SPI_DO4
BLUETOOTH
BLUETOOTH.Sch
BT_PWEN
BT-RESET
TXD0-GPH2
RXD0-GPH3
VOICE-DN
VOICE-DP
TFTDRIVE
TFTDRIVE.SCH
TSYM
TSYP
TSXM
TSXP
VD[0..23]
LCDPOWEREN
TOUT0-GPB0
VCLK
WLED_EN
PWREN
IICSDA
CAM_IICCLK
VIDEOIN_DET
CVBS1
VIDEO_PWN
XDREQ1-GPB8
CAMPCLK
CAMDATA[0..7]
VM-VDEN
VFRAM
VLINE
POWER
POWER.SCH
AIN0
nRESET
EINT8-GPG0
SYS_ON
DC_DET
CHARGE_DET
nBATFLT
HOLD-EN
PWREN
Title
Size
A3
Number
Revision
Date: 21-Mar-2008
Sheet of
File: D:\Personal\Temp\Rar\1000C-MSD-043B\Schematic.ddb
Drawn By:

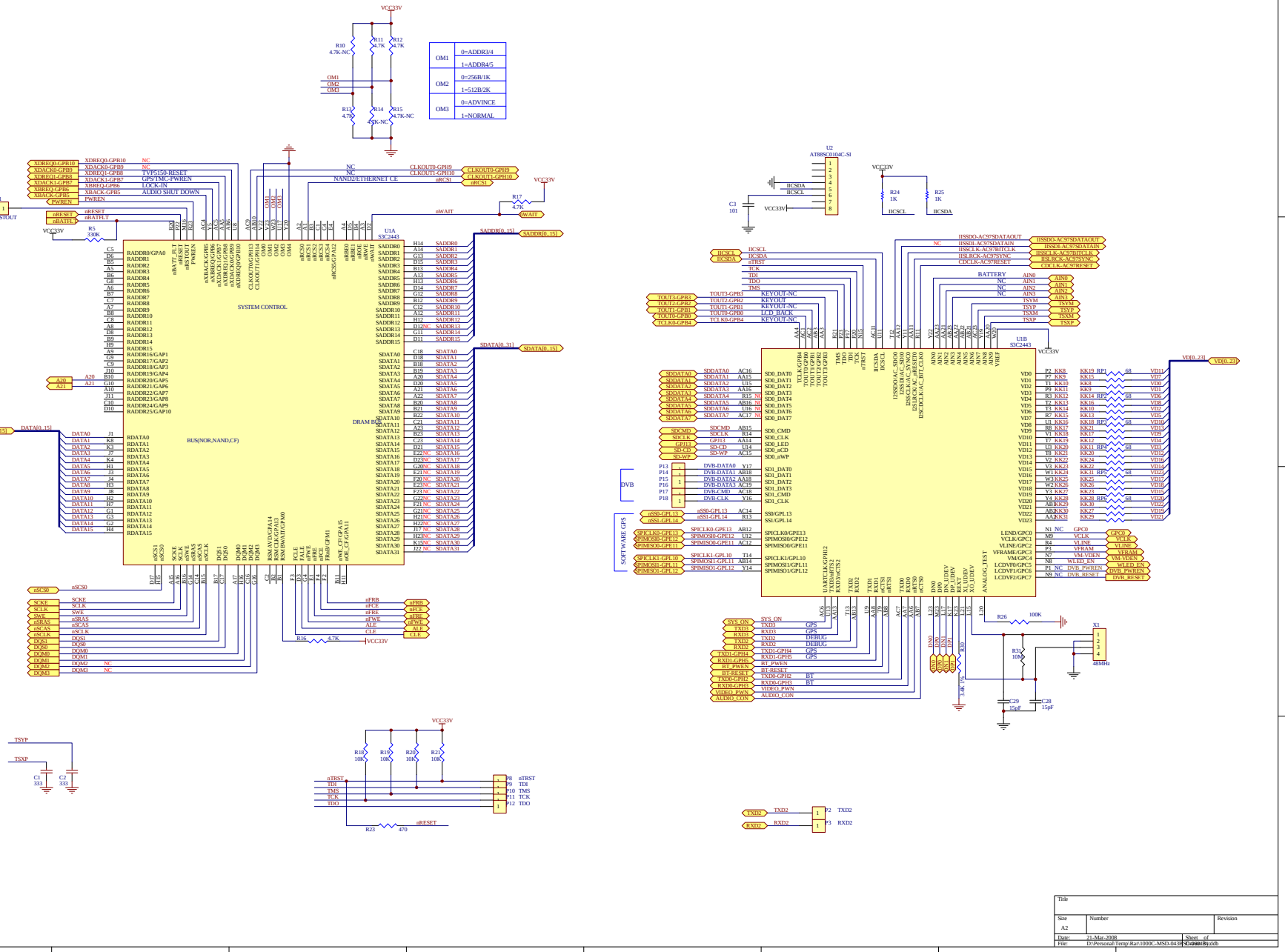
VCC33V
R10 4.7K-NC
R11 4.7K
R12 4.7K
R13 4.7K
R14 4.7K-NC
R15 4.7K-NC
OM1
OM2
OM3
OM1 0=ADDR3/4 1=ADDR4/5
OM2 0=256B/1K 1=512B/2K
OM3 0=ADVINCE 1=NORMAL
P1
RSTOUT
nRESET
nBATLT
R5 330K
U1A S3C2443
SYSTEM CONTROL
BUS(NOR,NAND,CF)
DRAM BUS
SADDR[0..15]
SDATA[0..31]
DATA[0..15]
A20
A21
XDREQ0-GPB10
XDACK0-GPB9
XDREQ1-GPB8
XDACK1-GPB7
XBREQ-GPB6
XBACK-GPB5
PWREN
NC
TVP5150-RESET
GPS/TMC-PWREN
LOCK-IN
AUDIO SHUT DOWN
CLKOUT0-GPH9
CLKOUT1-GPH10
NAND32/ETHERNET CE
nRCS1
R17 4.7K
nWAIT
WAIT
nSCS0
nSCS1
SCKE
SCLK
SWE
nSRAS
nSCAS
nSCLK
DQS1
DQS0
DQM0
DQM1
DQM2
DQM3
nFRB
nFCE
nFRE
nFWE
ALE
CLE
R16 4.7K
U2 AT88SC0104C-SI
IICSDA
IICSCL
C3 101
R24 1K
R25 1K
U1B S3C2443
BATTERY
AIN0
AIN1
AIN2
AIN3
TSYM
TSYP
TSXM
TSXP
IISSDO-AC97SDATAOUT
IISSDI-AC97SDATAIN
IISCLK-AC97BITCLK
IISLRCK-AC97SYNC
CODCLK-AC97RESET
KEYOUT-NC
LCD_BACK
TCLK0-GPB4
TOUT3-GPB3
TOUT2-GPB2
TOUT1-GPB1
TOUT0-GPB0
TCK
TDI
TDO
TMS
nTRST
SD0_DAT0
SD0_DAT1
SD0_DAT2
SD0_DAT3
SD0_DAT4
SD0_DAT5
SD0_DAT6
SD0_DAT7
SD0_CMD
SD0_CLK
SD0_LED
SD0_nCD
SD0_nWP
SD1_DAT0
SD1_DAT1
SD1_DAT2
SD1_DAT3
SD1_CMD
SD1_CLK
SDDAT0
SDDAT1
SDDAT2
SDDAT3
SDDAT4
SDDAT5
SDDAT6
SDDAT7
SDCMD
SDCLK
GPJ13
SD-CD
SD-WP
DVB
DVB-DATA0
DVB-DATA1
DVB-DATA2
DVB-DATA3
DVB-CMD
DVB-CLK
nSS0-GPL13
nSS1-GPL14
SOFTWARE GPS
SPICLK0-GPE13
SPIMOSI0-GPE12
SPIMISO0-GPE11
SPICLK1-GPL10
SPIMOSI1-GPL11
SPIMISO1-GPL12
VD[0..23]
LEND/GPC0
VCLK/GPC1
VLINE/GPC2
VFRAME/GPC3
VM/GPC4
LCDVF0/GPC5
LCDVF1/GPC6
LCDVF2/GPC7
VCLK
VLINE
VFRAM
VM-VDEN
WLED_EN
DVB_PWREN
DVB_RESET
ANALOG_TEST
R26 100K
X1 48MHz
C29 15pF
C28 15pF
SYS_ON
TXD1 GPS
RXD1 GPS
TXD2 DEBUG
RXD2 DEBUG
TXD1-GPH4 GPS
RXD1-GPH5 GPS
BT_PWEN
BT-RESET
TXD0-GPH2 BT
RXD0-GPH3 BT
VIDEO_PWN
AUDIO_CON
TXD2
RXD2
TSYP
TSXP
C1 333
C2 333
R18 10K
R19 10K
R20 10K
R21 10K
nTRST
TDI
TMS
TCK
TDO
R23 470
Title
Size A2
Number
Revision
Date: 21-Mar-2008
Sheet of
File: D:\Personal\Temp\Rar\1000C-MSD-043\SCH.ddb

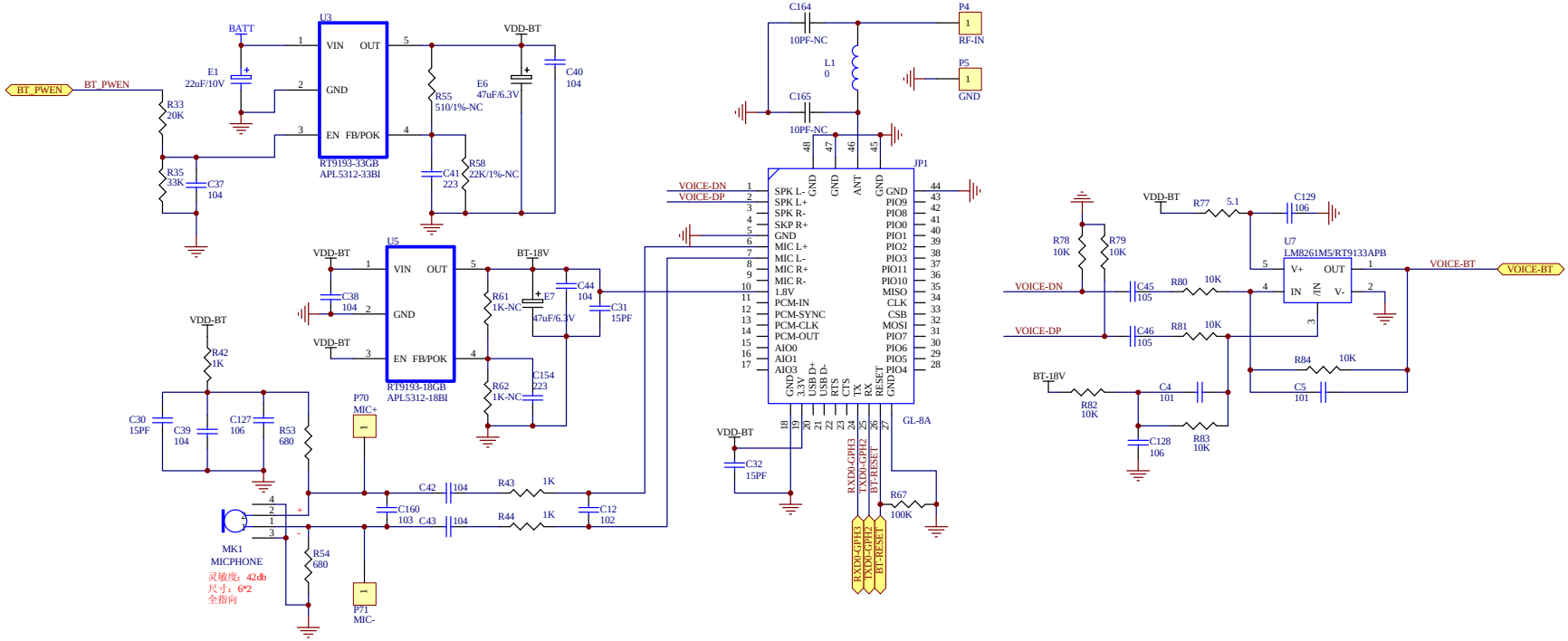

Title		
Size A3	Number	Revision
Date: 21-Mar-2008	Sheet of	
File: D:\Personal\Temp\Rar\1000C-MSD-043B\SCH\BT.ddb		

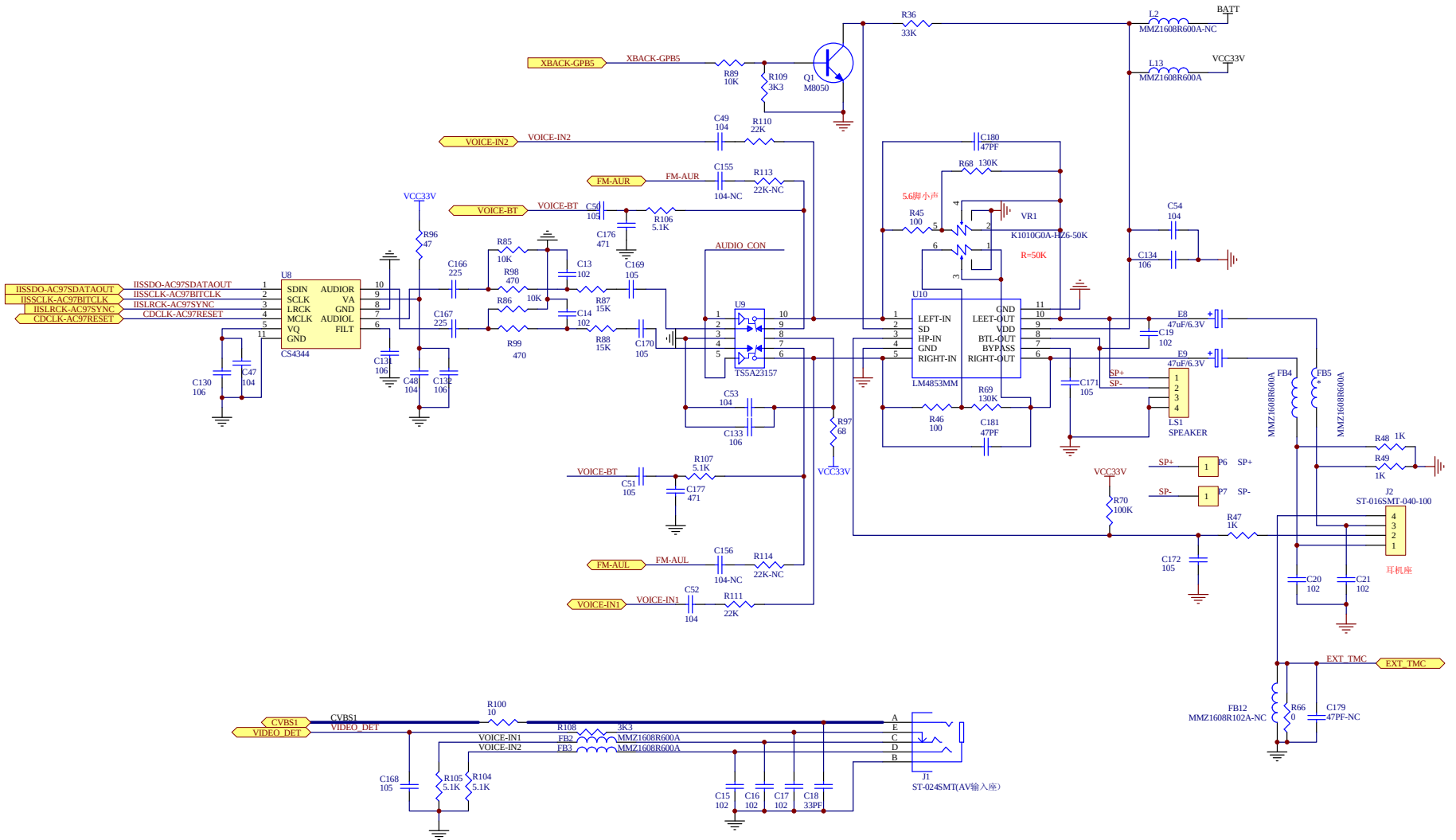

Title		
Size A3	Number	Revision
Date: 21-Mar-2008		Sheet of
File: D:\Personal\Temp\Rar\1000C-MSD-043B5\Default.ddb		

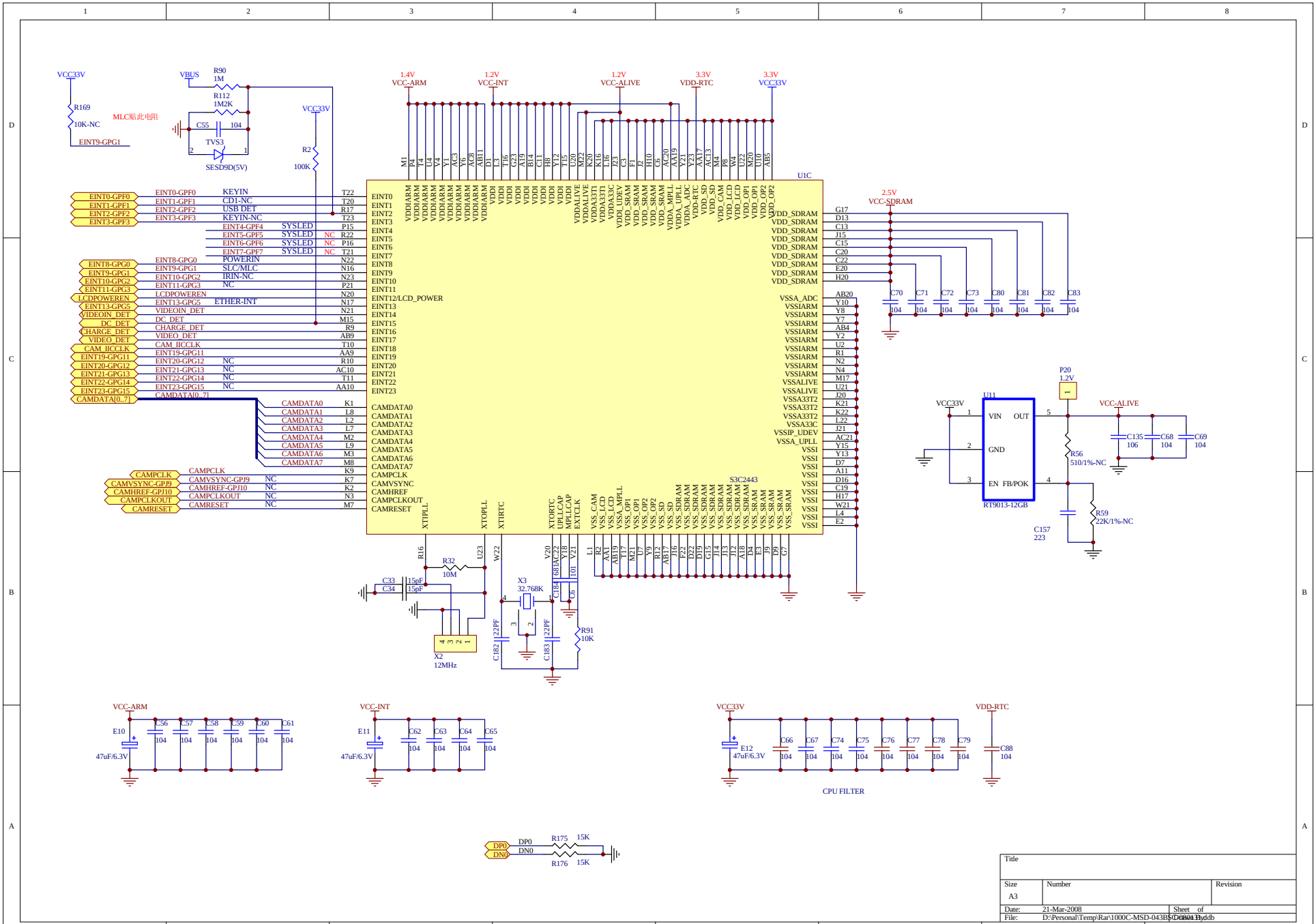

VCC33V
R169
10K-NC
EINT9-GPG1
MLC贴此电阻
VBUS
R90
1M
R112
1M2K
C55
104
TVS3
SESD9D(5V)
R2
100K
1.4V
VCC-ARM
1.2V
VCC-INT
1.2V
VCC-ALIVE
3.3V
VDD-RTC
3.3V
VCC33V
U1C
2.5V
VCC-SDRAM
EINT0-GPF0
EINT1-GPF1
EINT2-GPF2
EINT3-GPF3
KEYIN
CD1-NC
USB DET
KEYIN-NC
EINT4-GPF4
EINT5-GPF5
EINT6-GPF6
EINT7-GPF7
SYSLED
EINT8-GPG0
EINT9-GPG1
EINT10-GPG2
EINT11-GPG3
POWERIN
SLC/MLC
IRIN-NC
NC
LCDPOWEREN
EINT13-GPG5
ETHER-INT
VIDEOIN_DET
DC_DET
CHARGE_DET
VIDEO_DET
CAM_IICCLK
EINT19-GPG11
EINT20-GPG12
EINT21-GPG13
EINT22-GPG14
EINT23-GPG15
CAMDATA[0..7]
CAMDATA0
CAMDATA1
CAMDATA2
CAMDATA3
CAMDATA4
CAMDATA5
CAMDATA6
CAMDATA7
CAMPCLK
CAMVSYNC-GPJ9
CAMHREF-GPJ10
CAMPCLKOUT
CAMRESET
EINT12/LCD_POWER
VDD_SDRAM
VSSA_ADC
VSSIARM
VSSALIVE
VSSA33T2
VSSA33C
VSSIP_UDEV
VSSA_UPLL
VSSI
S3C2443
XTIPLL
XTOPLL
XTIRTC
XTORTC
UPLLCAP
MPLLCAP
EXTCLK
R16
R32
10M
U23
W22
C33
C34
15pF
X2
12MHz
X3
32.768K
C182
22PF
C183
22PF
R91
10K
P20
1.2V
U11
VIN
OUT
GND
EN
FB/POK
RT9013-12GB
VCC-ALIVE
C135
106
C68
104
C69
104
R56
510/1%-NC
R59
22K/1%-NC
C157
223
VCC-ARM
E10
47uF/6.3V
C56
C57
C58
C59
C60
C61
104
VCC-INT
E11
47uF/6.3V
C62
C63
C64
C65
104
VCC33V
E12
47uF/6.3V
C66
C67
C74
C75
C76
C77
C78
C79
104
VDD-RTC
C88
104
CPU FILTER
DP0
DN0
R175
15K
R176
15K
Title
Size
A3
Number
Revision
Date:
21-Mar-2008
Sheet of
File:
D:\Personal\Temp\Rar\1000C-MSD-043B\SC-08013.ddb

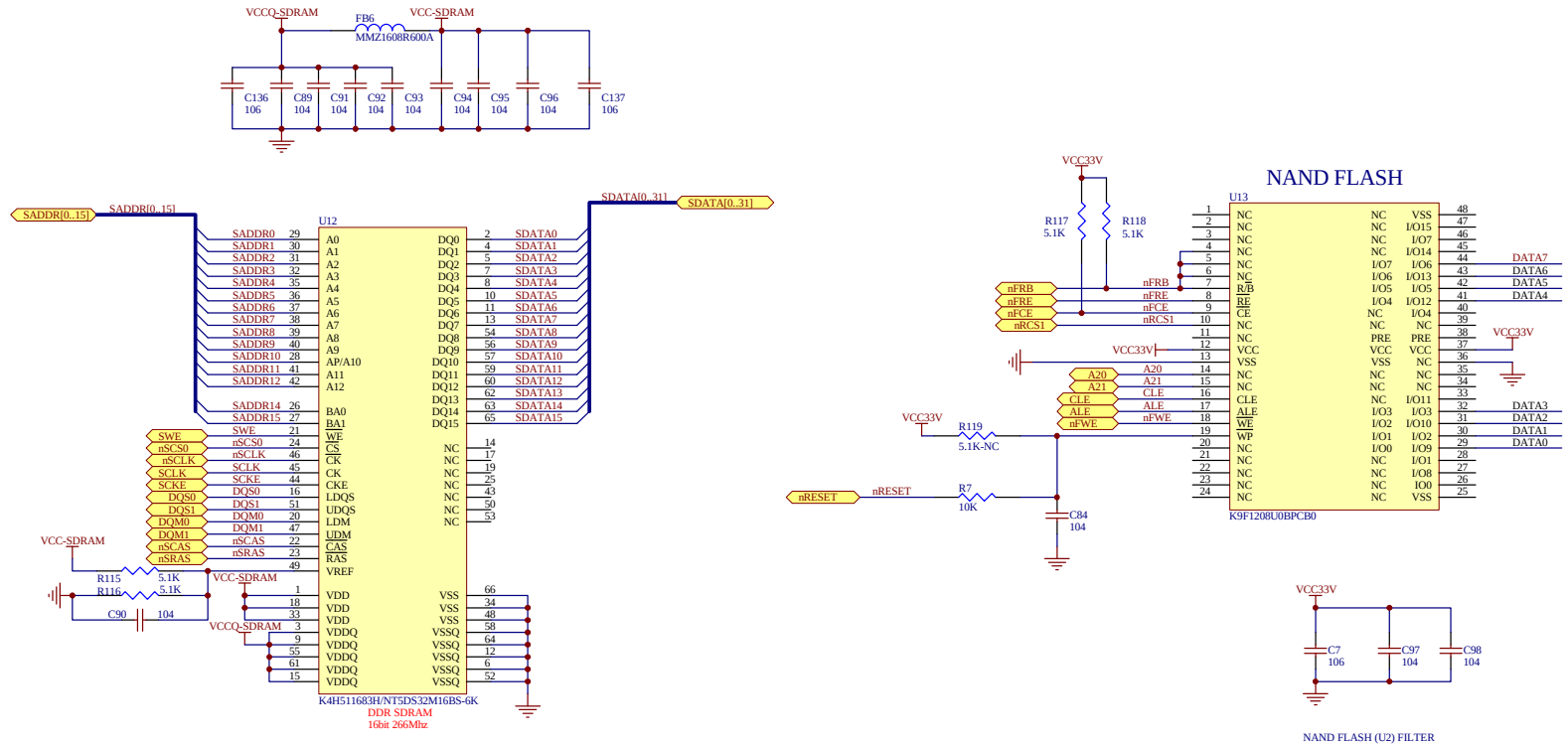
VCCQ-SDRAM
FB6
MMZ1608R600A
VCC-SDRAM
C136 106
C89 104
C91 104
C92 104
C93 104
C94 104
C95 104
C96 104
C137 106
SADDR[0..15]
SADDR[0..15]
SDATA[0..31]
SDATA[0..31]
U12
SADDR0 29
SADDR1 30
SADDR2 31
SADDR3 32
SADDR4 35
SADDR5 36
SADDR6 37
SADDR7 38
SADDR8 39
SADDR9 40
SADDR10 28
SADDR11 41
SADDR12 42
SADDR14 26
SADDR15 27
A0 A1 A2 A3 A4 A5 A6 A7 A8 A9 AP/A10 A11 A12 BA0 BA1
SDATA0 2
SDATA1 4
SDATA2 5
SDATA3 7
SDATA4 8
SDATA5 10
SDATA6 11
SDATA7 13
SDATA8 54
SDATA9 56
SDATA10 57
SDATA11 59
SDATA12 60
SDATA13 62
SDATA14 63
SDATA15 65
DQ0 DQ1 DQ2 DQ3 DQ4 DQ5 DQ6 DQ7 DQ8 DQ9 DQ10 DQ11 DQ12 DQ13 DQ14 DQ15
SWE 21
nSCS0 24
nSCLK 46
SCLK 45
SCKE 44
DQS0 16
DQS1 51
DQM0 20
DQM1 47
nSCAS 22
nSRAS 23
49
WE CS CK CK CKE LDQS UDQS LDM UDM CAS RAS VREF
14 17 19 25 43 50 53
VCC-SDRAM
R115 5.1K
R116 5.1K
C90 104
VCCQ-SDRAM
1 18 33 3 9 55 61 15
VDD VDD VDD VDDQ VDDQ VDDQ VDDQ VDDQ
66 34 48 58 64 12 6 52
VSS VSS VSS VSSQ VSSQ VSSQ VSSQ VSSQ
K4H511683H4/NT5DS32M16BS-6K
DDR SDRAM
16bit 266Mhz
NAND FLASH
VCC33V
R117 5.1K
R118 5.1K
U13
nFRB nFRE nFCE nRCS1
A20 A21 CLE ALE nFWE
VCC33V
R119 5.1K-NC
nRESET
R7 10K
C84 104
NC NC NC NC NC NC NC NC NC NC NC NC NC NC NC NC
NC NC NC NC NC NC NC NC NC NC NC NC NC NC NC NC
R/B RE CE VCC VSS WE WP ALE CLE
I/O7 I/O6 I/O5 I/O4 I/O3 I/O2 I/O1 I/O0
DATA7 DATA6 DATA5 DATA4 DATA3 DATA2 DATA1 DATA0
K9F1208U0BPCB0
VCC33V
C7 106
C97 104
C98 104
NAND FLASH (U2) FILTER
Title
Size A3
Number
Revision
Date: 21-Mar-2008
Sheet of
File: D:\Personal\Temp\Rar\1000C-MSD-043B\SCH.SchDoc
Drawn By:

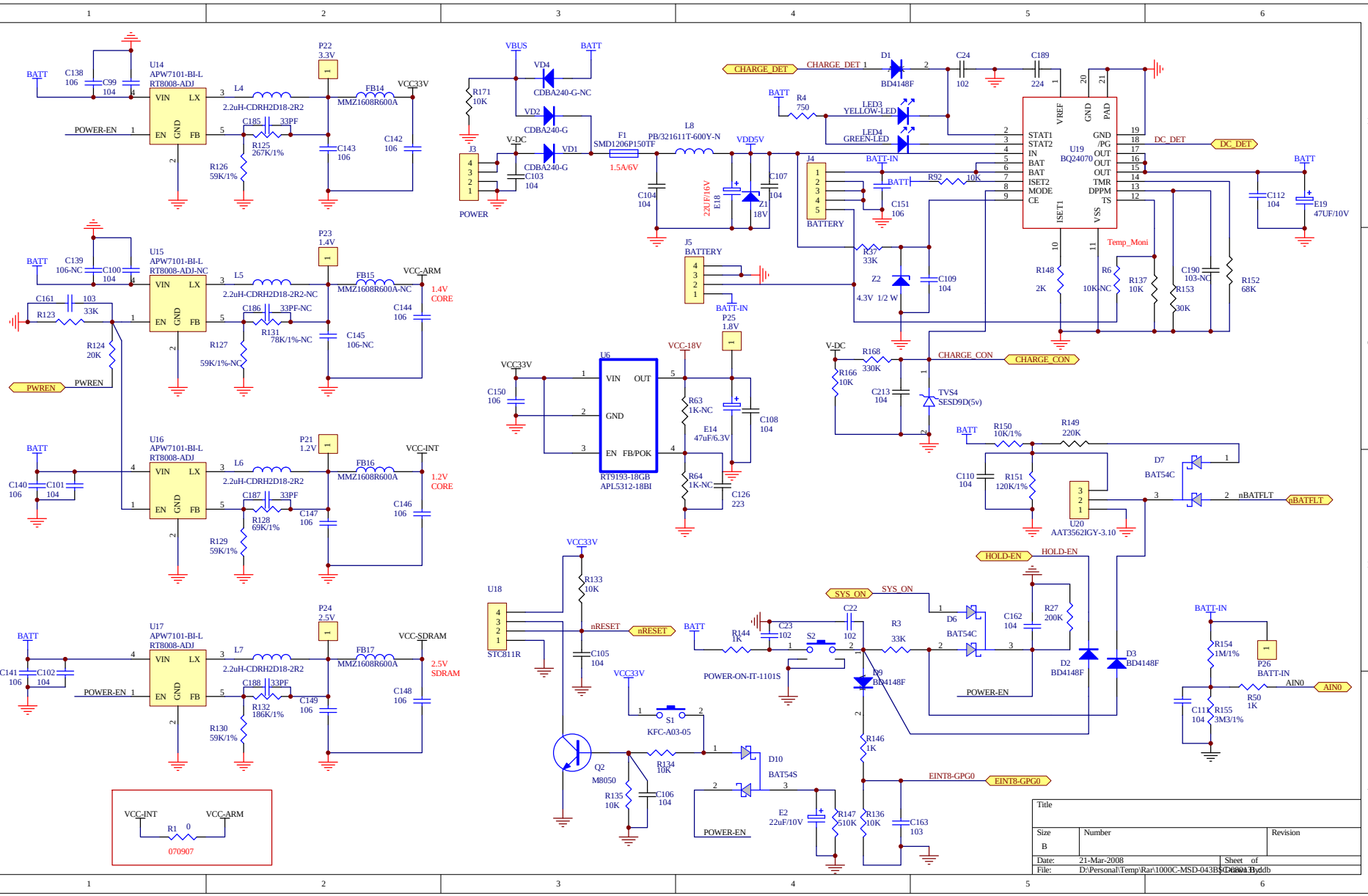
U14
APW7101-BI-L
RT8008-ADJ
L4
2.2uH-CDRH2D18-2R2
P22
3.3V
VCC33V
FB14
MMZ1608R600A
POWER-EN
C185 33PF
R125 267K/1%
R126 59K/1%
C142 106
U15
APW7101-BI-L
RT8008-ADJ-NC
L5
2.2uH-CDRH2D18-2R2-NC
P23
1.4V
VCC-ARM
FB15
MMZ1608R600A-NC
1.4V CORE
PWREN
C186 33PF-NC
R131 78K/1%-NC
R127 59K/1%-NC
C145 106-NC
U16
APW7101-BI-L
RT8008-ADJ
L6
2.2uH-CDRH2D18-2R2
P21
1.2V
VCC-INT
FB16
MMZ1608R600A
1.2V CORE
C187 33PF
R128 69K/1%
R129 59K/1%
U17
APW7101-BI-L
RT8008-ADJ
L7
2.2uH-CDRH2D18-2R2
P24
2.5V
VCC-SDRAM
FB17
MMZ1608R600A
2.5V SDRAM
C188 33PF
R132 186K/1%
R130 59K/1%
VCC-INT
VCC-ARM
R1 0
070907
VBUS
BATT
VD4
CDBA240-G-NC
VD2
CDBA240-G
VD1
CDBA240-G
R171 10K
V-DC
J3
POWER
F1
SMD1206P150TF
1.5A/6V
L8
PB/321611T-600Y-N
VDD5V
C104 104
22UF/16V
E18
Z1 18V
C107 104
J5
BATTERY
BATT-IN
P25
1.8V
U6
RT9193-18GB
APL5312-18BI
VCC-18V
R63 1K-NC
E14 47uF/6.3V
R64 1K-NC
C126 223
C150 106
C108 104
CHARGE_DET
CHARGE_DET 1
D1
BD4148F
C24 102
C189 224
R4 750
LED3
YELLOW-LED
LED4
GREEN-LED
U19
BQ24070
STAT1
STAT2
IN
BAT
BAT
ISET2
MODE
CE
VREF
GND
/PG
OUT
OUT
OUT
TMR
DPPM
TS
ISET1
VSS
PAD
DC_DET
J4
BATTERY
BATT-IN
R92 10K
C151 106
R37 33K
Z2 4.3V 1/2 W
C109 104
R148 2K
R6 10K-NC
R137 10K
R153 30K
C190 103-NC
R152 68K
Temp_Moni
C112 104
E19 47UF/10V
V-DC
R168 330K
R166 10K
CHARGE_CON
C213 104
TVS4
SESD9D(5v)
R150 10K/1%
R149 220K
C110 104
R151 120K/1%
U20
AAT3562IGY-3.10
D7
BAT54C
nBATFLT
U18
STC811R
nRESET
R133 10K
C105 104
R144 1K
C23 102
S2
POWER-ON-IT-1101S
C22 102
R3 33K
D6
BAT54C
D9
BD4148F
D2
BD4148F
D3
BD4148F
C162 104
R27 200K
HOLD-EN
SYS_ON
POWER-EN
S1
KFC-A03-05
Q2
M8050
R135 10K
R134 10K
C106 104
D10
BAT54S
E2 22uF/10V
R147 510K
R136 10K
C163 103
R146 1K
EINT8-GPG0
BATT-IN
P26
R154 1M/1%
C111 104
R155 3M3/1%
R50 1K
AIN0
Title
Size
B
Number
Revision
Date: 21-Mar-2008
File: D:\Personal\Temp\Rar\1000C-MSD-043B\SCH.SchDoc
Sheet of
Drawn By:

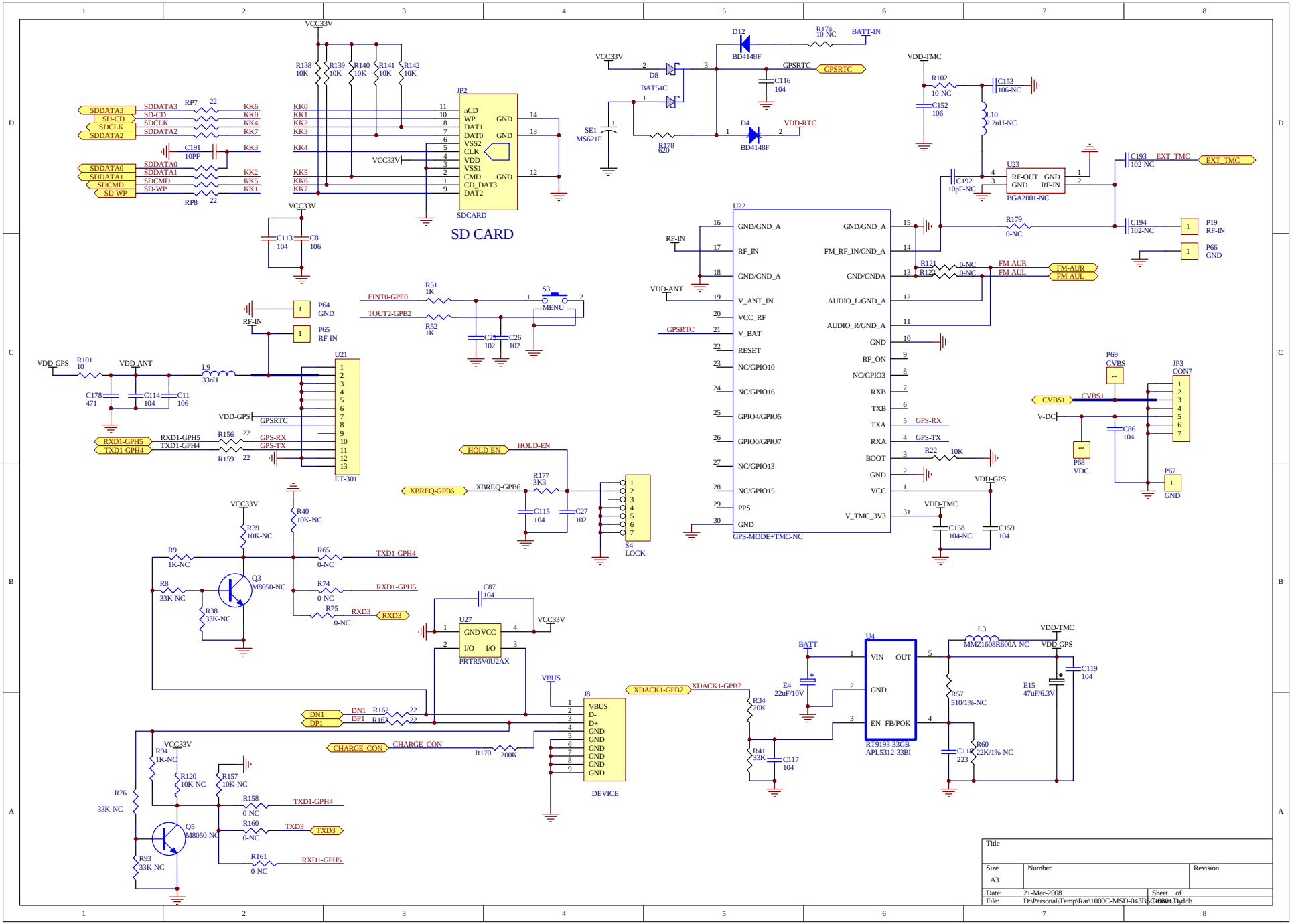
SD CARD
JP2
SDCARD
U22
GPS-MODE+TMC-NC
U21
ET-301
U23
BGA2001-NC
U27
PRTR5V0U2AX
U4
RT9193-33GB
APL5312-33BI
J8
DEVICE
S3
MENU
S4
LOCK
JP3
CON7
Q3
M8050-NC
Q5
M8050-NC
D12
BD4148F
D4
BD4148F
D8
BAT54C
SE1
MS621F
L9
33nH
L10
2.2uH-NC
L3
MMZ1608R600A-NC
E4
22uF/10V
E15
47uF/6.3V
Title
Size
A3
Number
Revision
Date: 21-Mar-2008
Sheet of
File: D:\Personal\Temp\Rar\1000C-MSD-043B\SD-0803.ddb

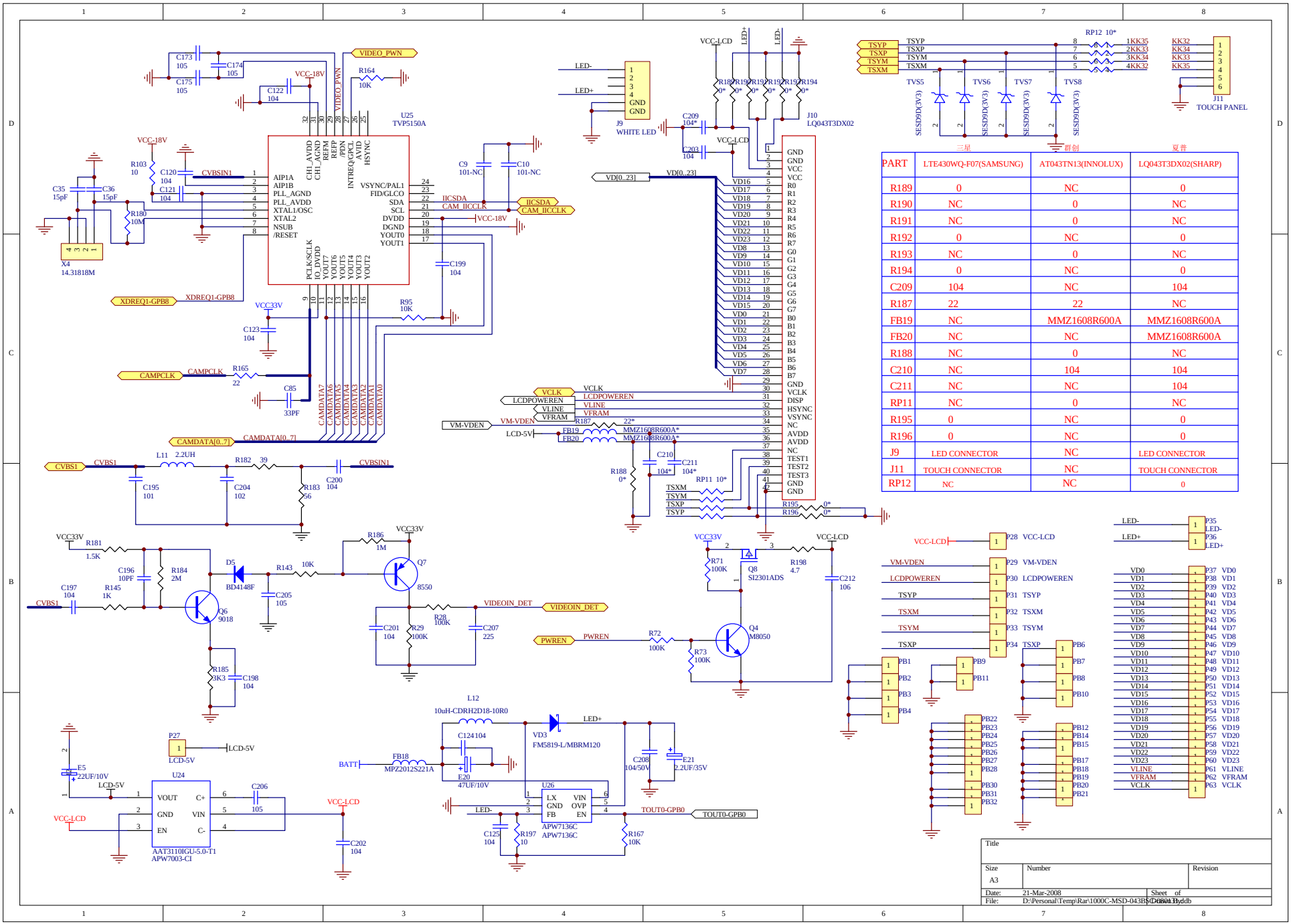

PART	LTE430WQ-F07(SAMSUNG)	AT043TN13(INNOLUX)	LQ043T3DX02(SHARP)
R189	0	NC	0
R190	NC	0	NC
R191	NC	0	NC
R192	0	NC	0
R193	NC	0	NC
R194	0	NC	0
C209	104	NC	104
R187	22	22	NC
FB19	NC	MMZ1608R600A	MMZ1608R600A
FB20	NC	NC	MMZ1608R600A
R188	NC	0	NC
C210	NC	104	104
C211	NC	NC	104
RP11	NC	0	NC
R195	0	NC	0
R196	0	NC	0
J9	LED CONNECTOR	NC	LED CONNECTOR
J11	TOUCH CONNECTOR	NC	TOUCH CONNECTOR
RP12	NC	NC	0