Key pad

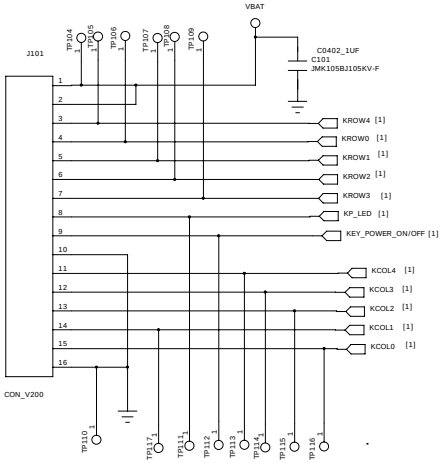

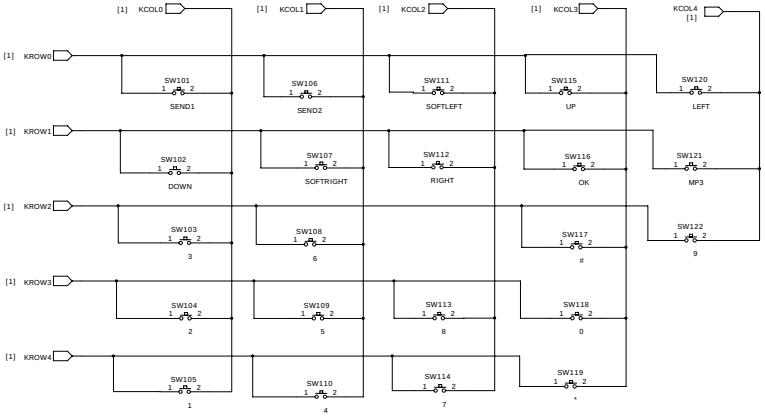

SIDEKEY

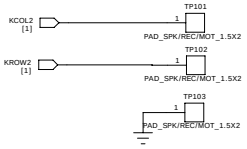

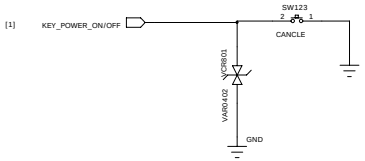

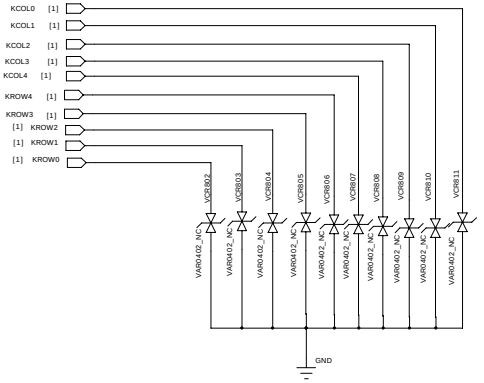

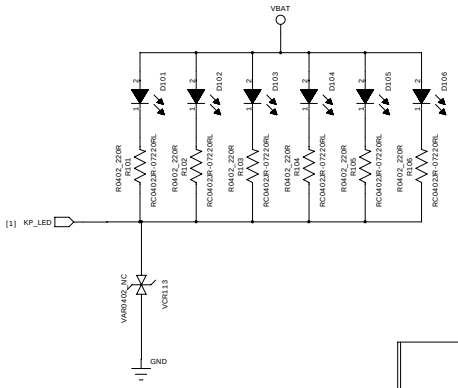

			MODEL:	DRAWING NO.:	
DRAWN		DATED	TITLE:	VERSION:	SHEET: 1/1
CHECKED		DATED			

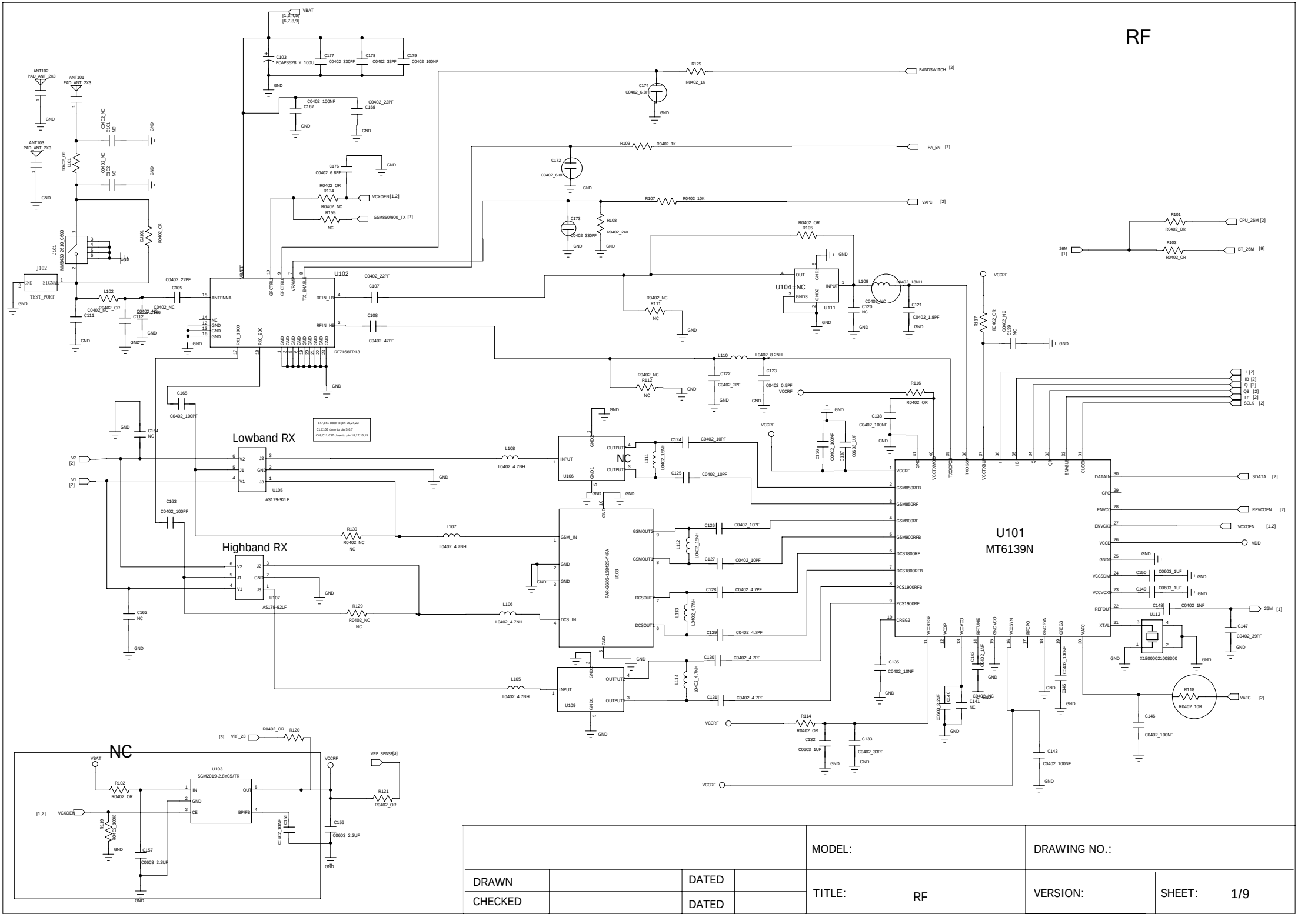

				MODEL:	DRAWING NO.:
DRAWN		DATED		TITLE: RF	VERSION:	SHEET: 1/9
CHECKED		DATED			

MT6223-PART1-DBB

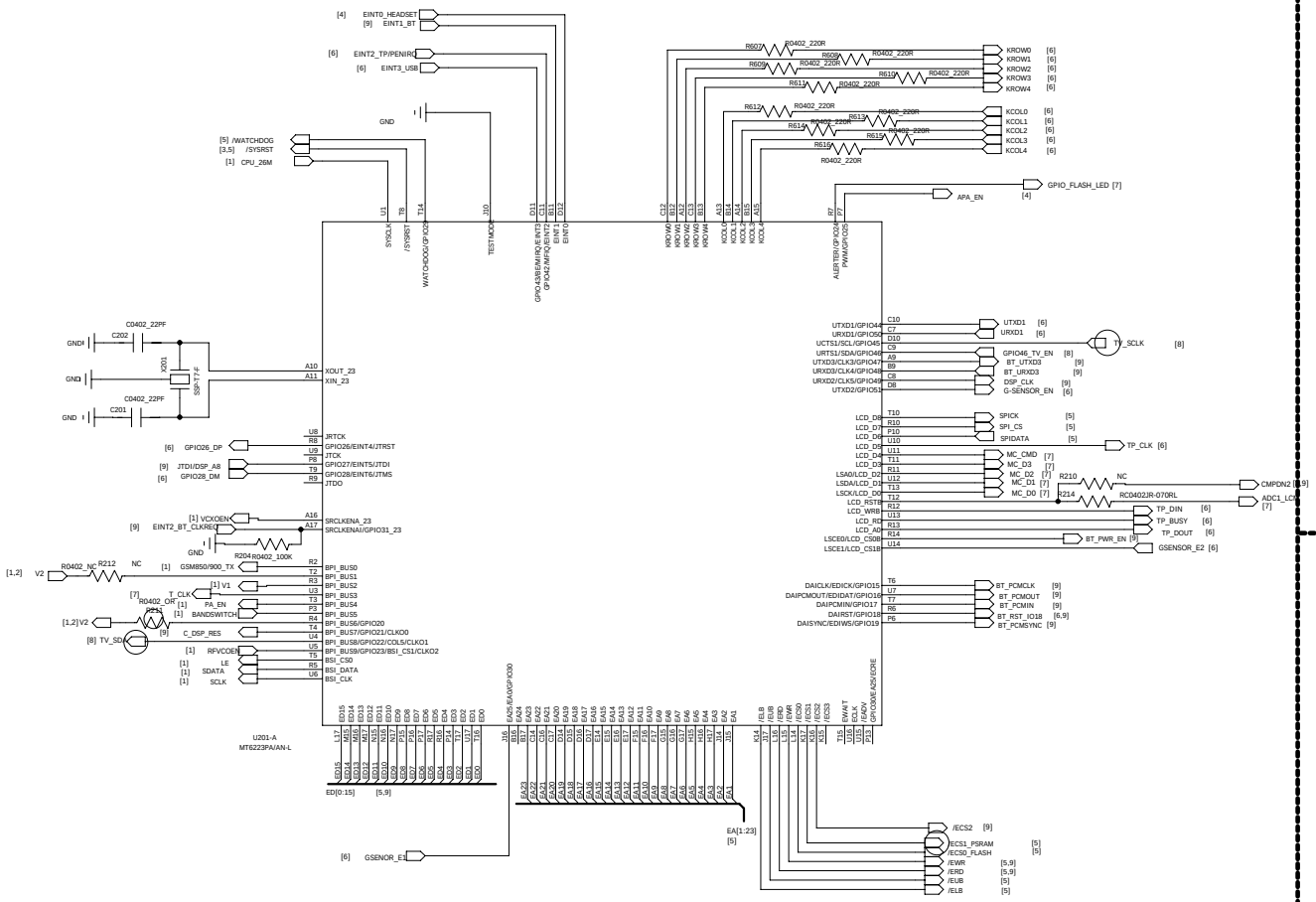

MT6223-PART2-POWER

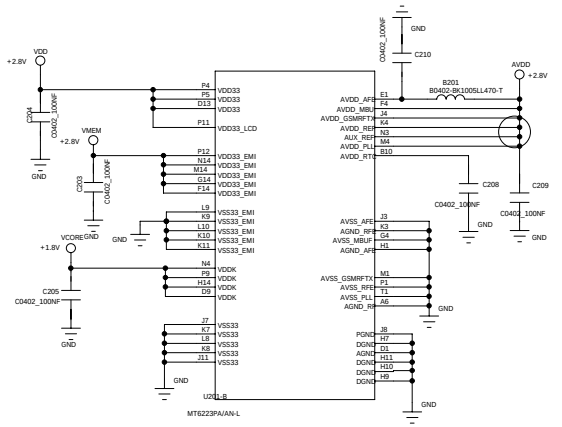

MT6223-PART3-ABB

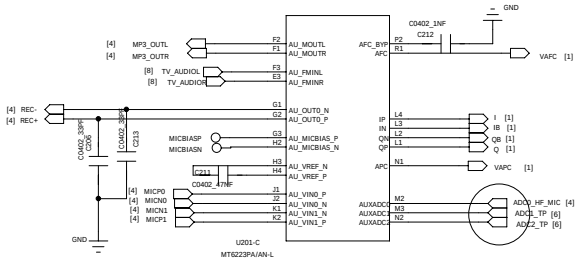

TP FOR JTAG

26M到CPU_26M和BT_26M的电路放到第一页

			MODEL:	DRAWING NO.:	
DRAWN		DATED			
CHECKED		DATED	TITLE: BB-MT6223D	VERSION:	SHEET: 2/9

MT6223_BUILT_IN_POWER MANAGE IC

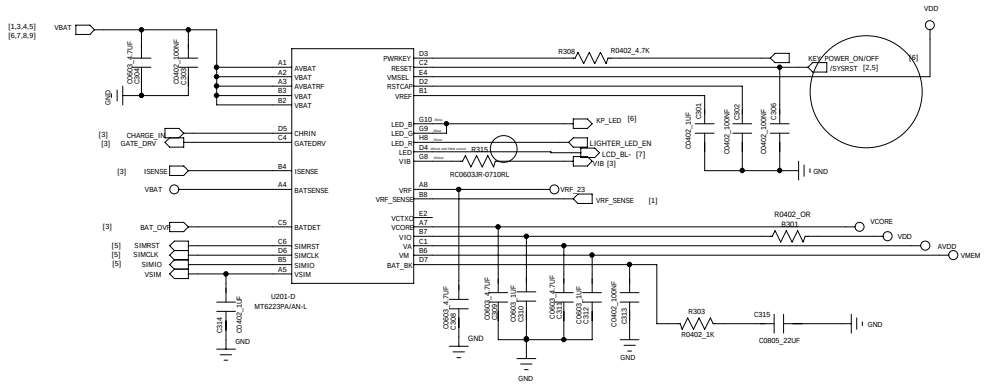

MOTO

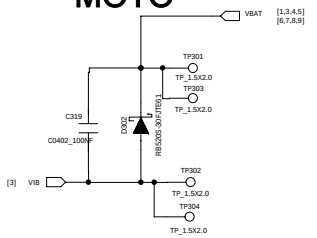

CHARGE

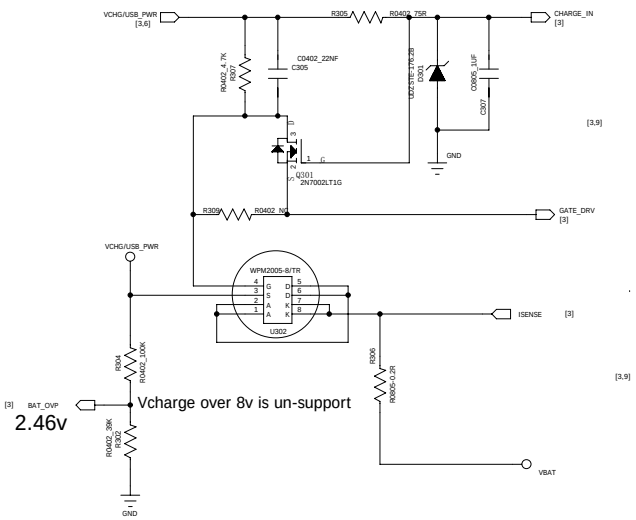

CAMERA POWER

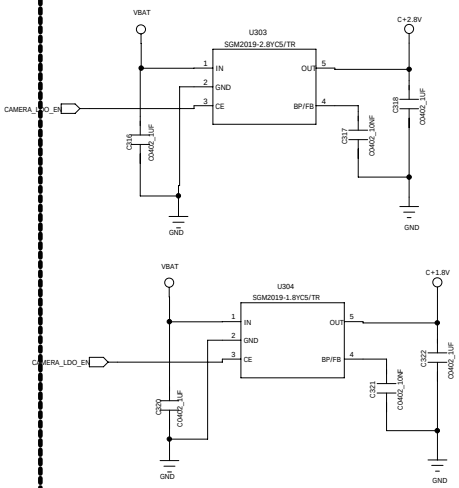

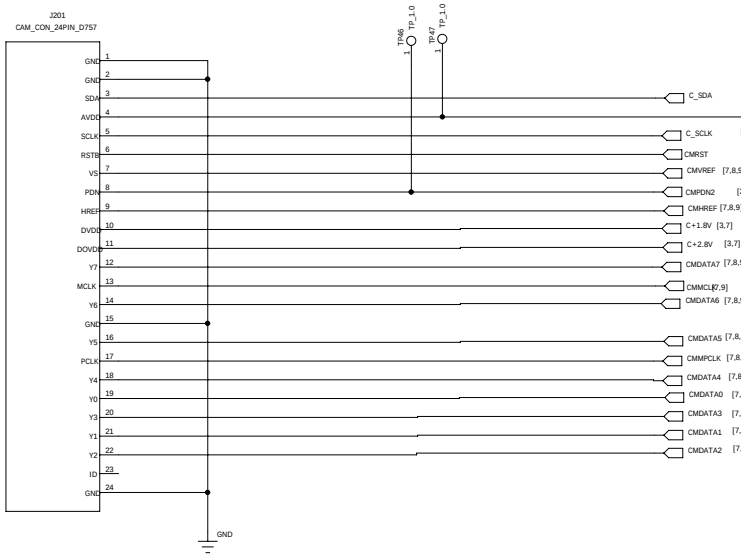

			MODEL:	DRAWING NO.:	
DRAWN		DATED	TITLE: BB-POWER	VERSION: 1.0	SHEET: 3/9
CHECKED		DATED			

MIC

Place these part near baseband

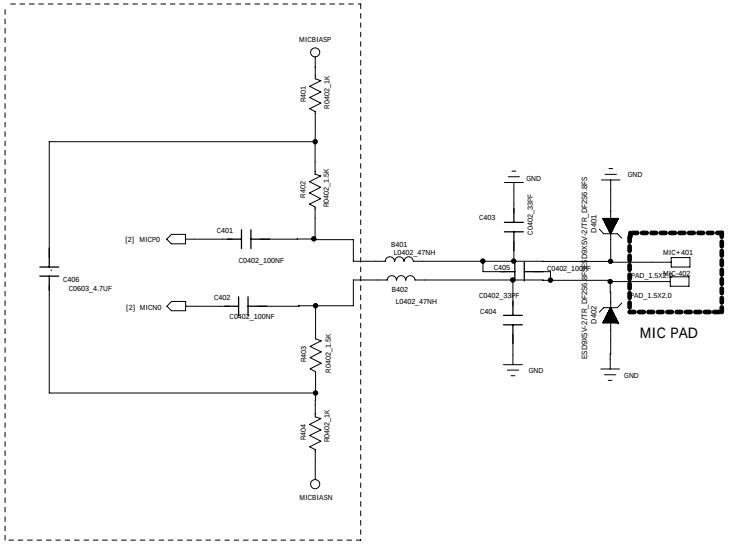

EAR-MIC

Place these parts near to CPU

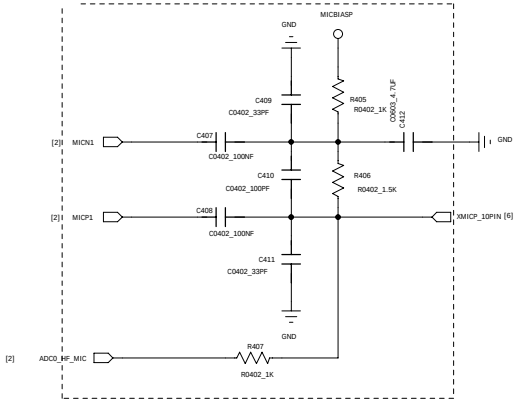

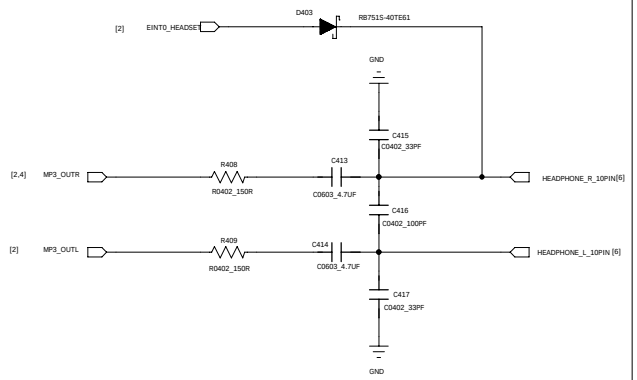

speaker

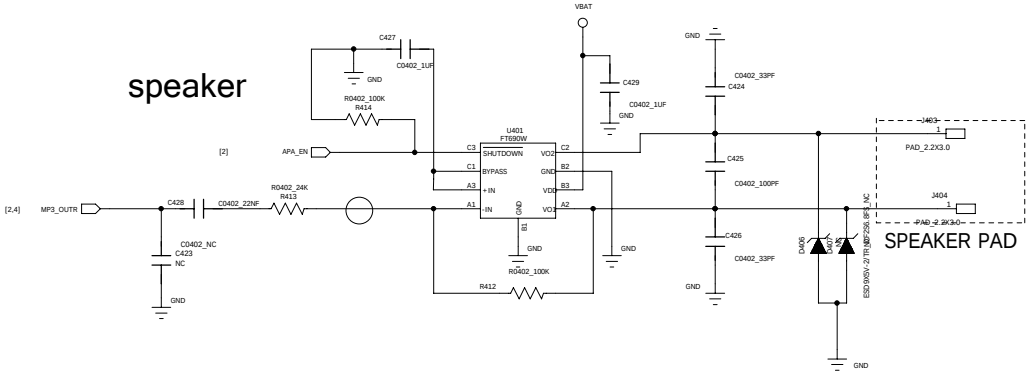

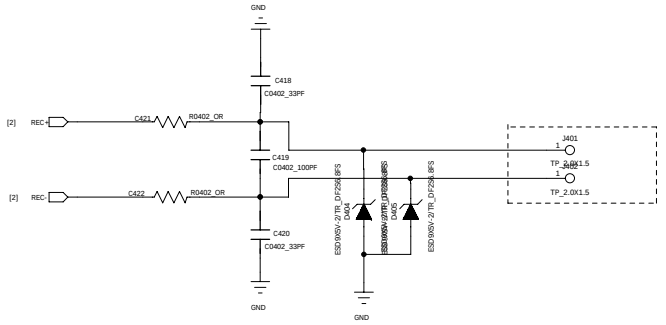

			MODEL:	DRAWING NO.:	
DRAWN		DATED	TITLE: BB-AUDIO	VERSION:	SHEET: 4/9
CHECKED		DATED			

MCP:NOR,PSRAM

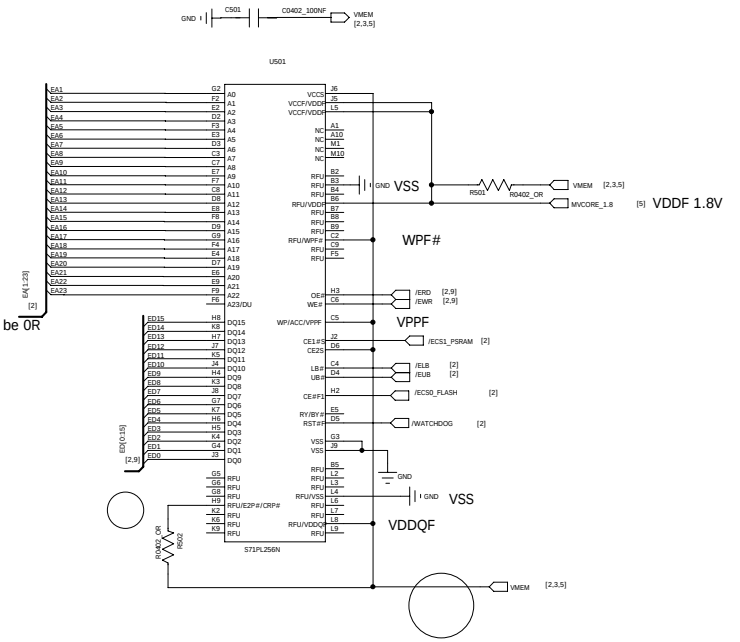

TOSHIBA 256Mb: R301 would be 0R

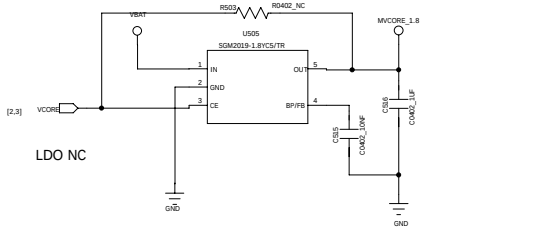

LDO NC

MT6225A can't support full 1.8V product stably, while MT6225B had removed this bug, can support full 1.8V product without LDO. And MT6223 have no information about it.

TV00570002CDGB	NC R502 R503 R505 R507,LDO 0R R504 R506
M36L0T7050T3ZSP 1.8V CORE,2.8V IO	NC R502 R507 R504 LDO 0R R503 R505 R506

SIM

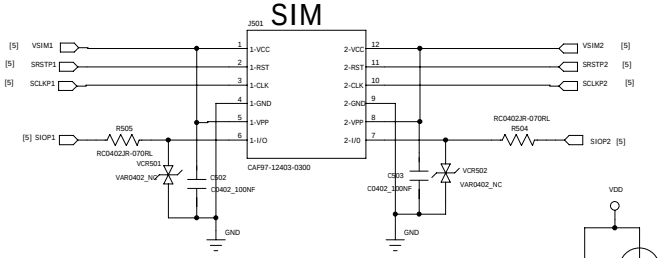

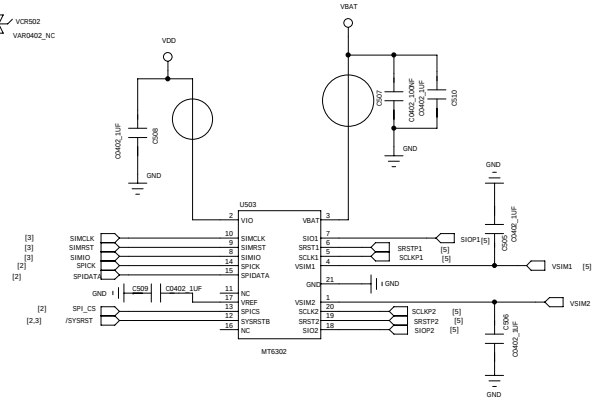

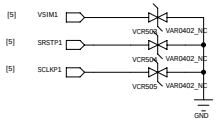

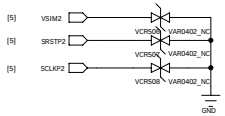

SHIELDING CASE

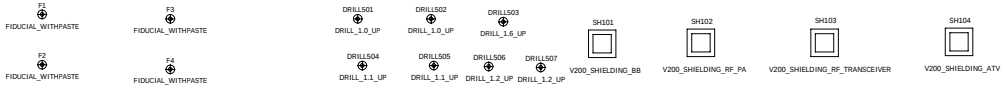

			MODEL:	DRAWING NO.:
DRAWN		DATED	TITLE: MEMORY.SIM	VERSION: / SHEET: 5/9
CHECKED		DATED		

I/O CONNECTOR

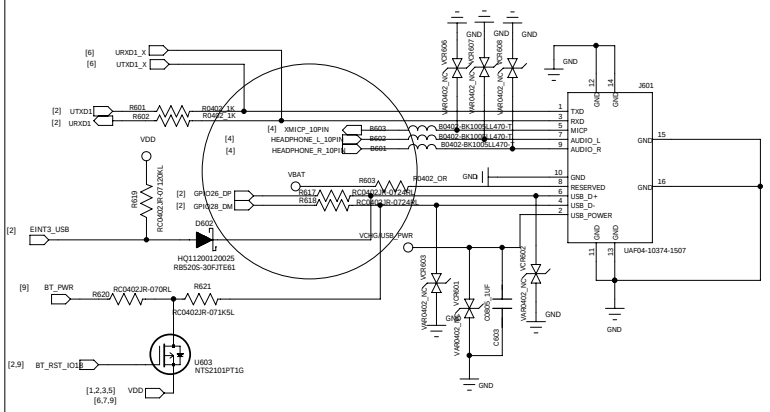

G Sensor

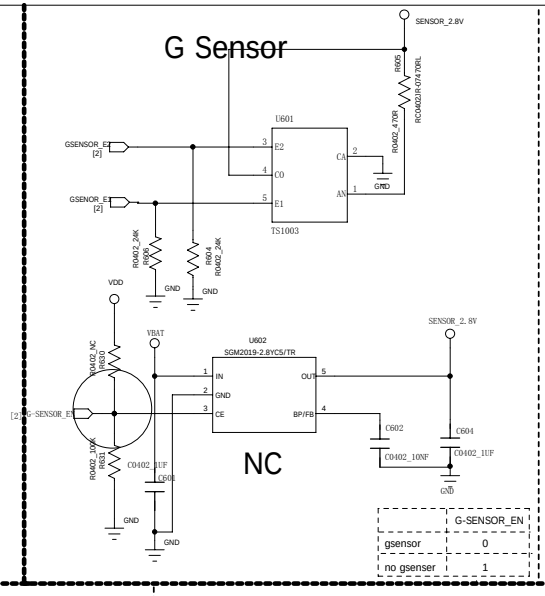

	G-SENSOR_EN
gsensor	0
no gsenser	1

SOFT TP

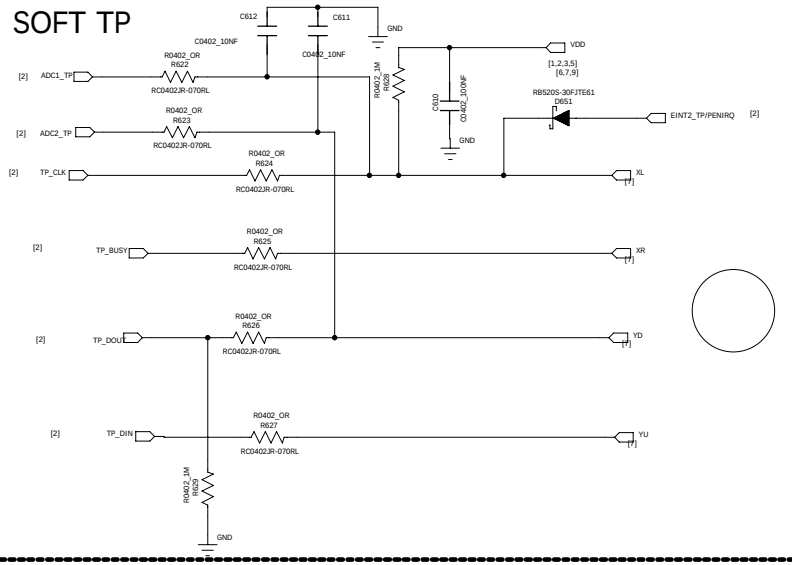

BATTERY CONNECTOR

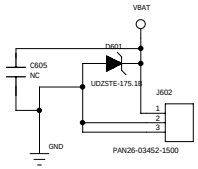

TP FOR PRODUCTION

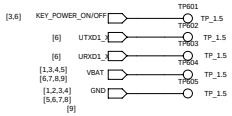

PAD for DC charge

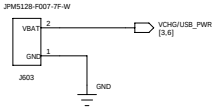

KEYPAD

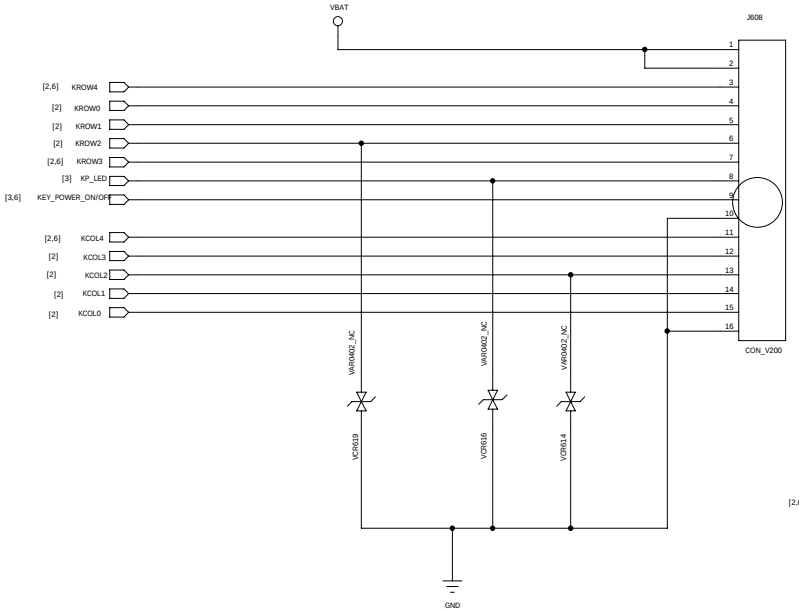

SIDE KEY

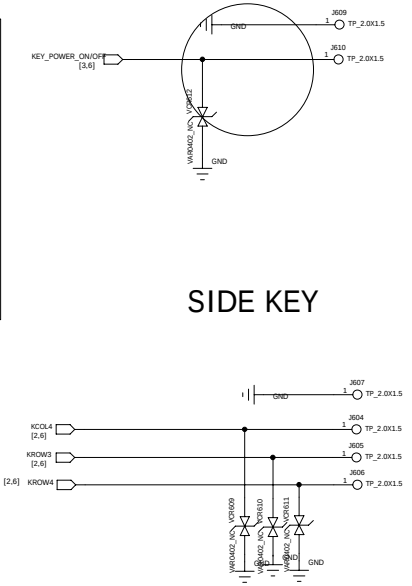

			MODEL:	DRAWING NO.:	
DRAWN		DATED	TITLE: I/O,G-SENSOR,BAT-CON,KEYPAD	VERSION:	SHEET: 6/9
CHECKED		DATED			

LCM INTERFACE 8-BITS LCD

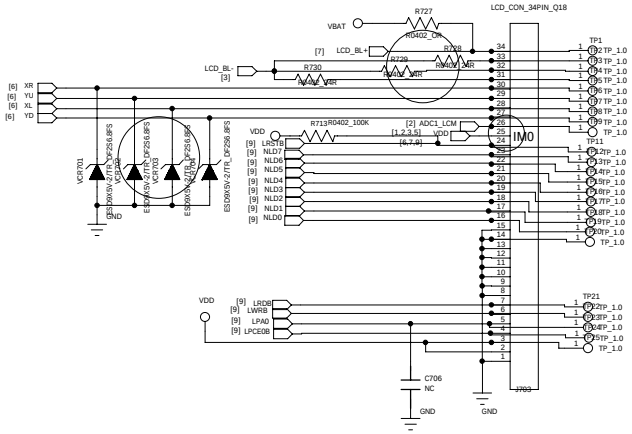

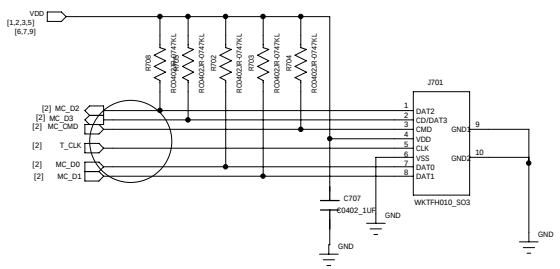

FLASH LED

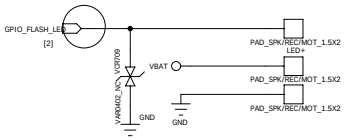

CAMERA1 INTERFACE

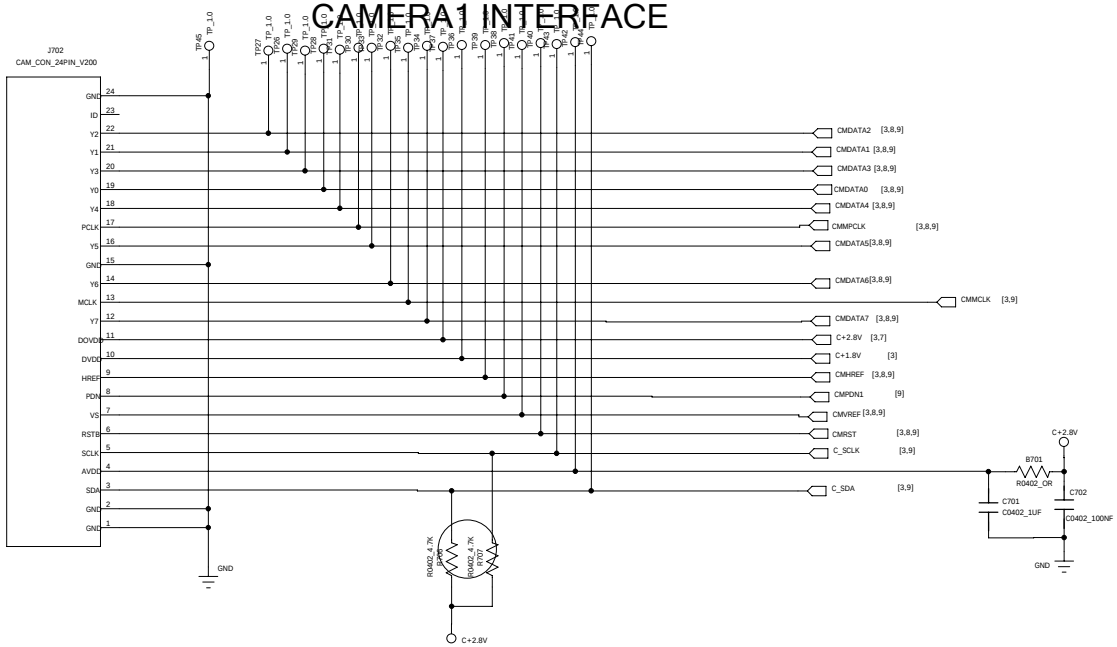

LCM BACKLIGHT

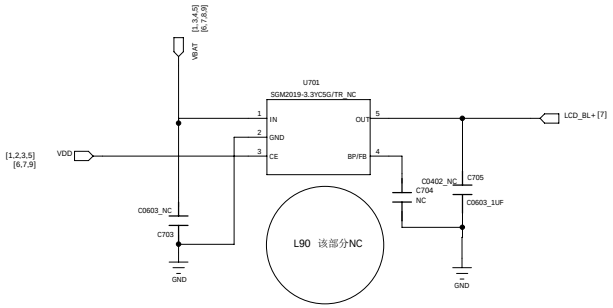

				MODEL:	DRAWING NO.:	
DRAWN		DATED		TITLE: LCM . T-Flash,CAMERA	VERSION:	SHEET: 7/9
CHECKED		DATED				

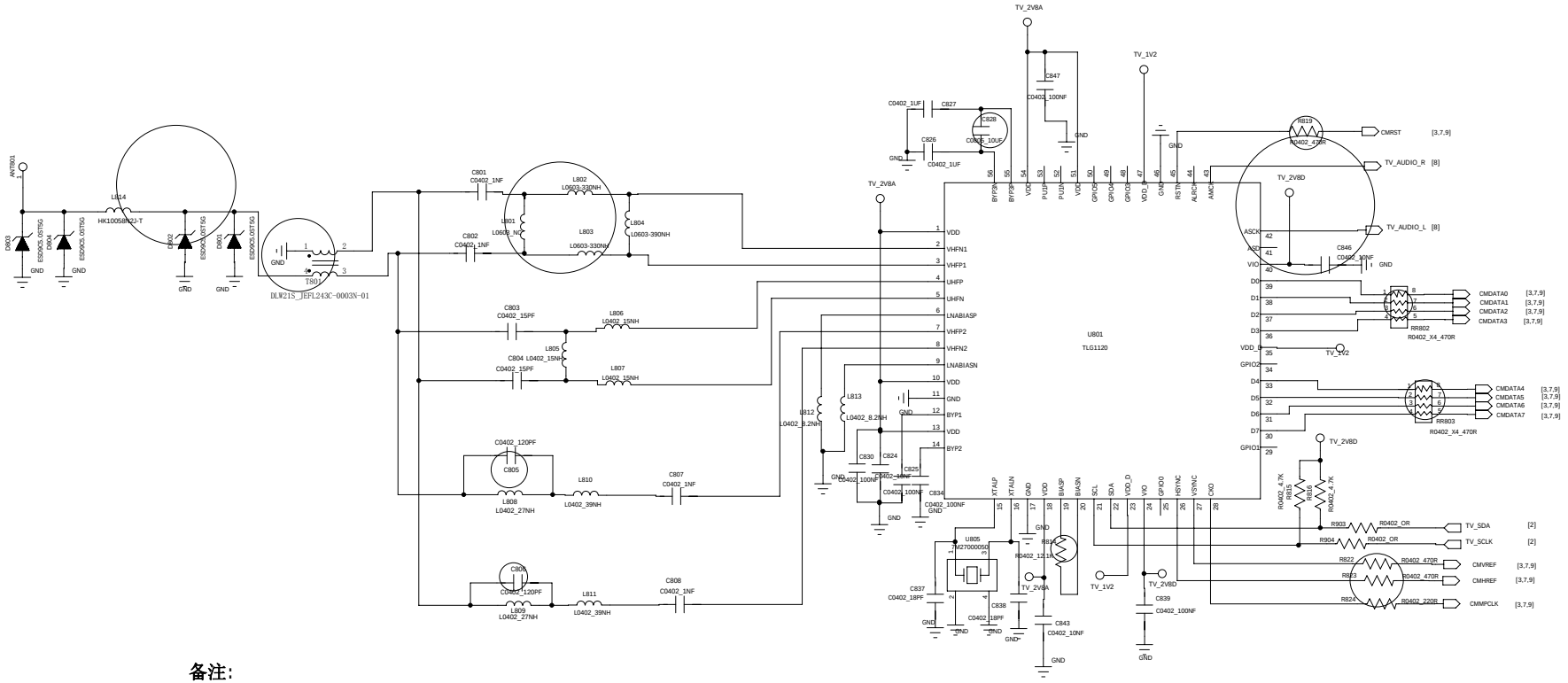

备注:

L801,L802,L803,L804,L805,L806,L807,L810,L811,L812,L813用HIGH-Q电感(Q>30)

L808,L809用LOW-Q电感(8-10)

TV POWER

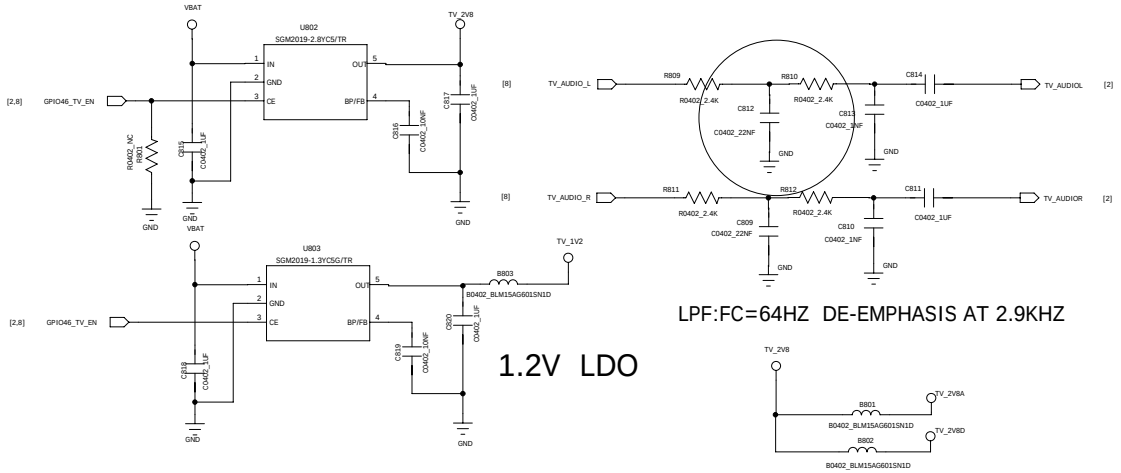

			MODEL:	DRAWING NO.:	
DRAWN		DATED	TITLE: ATV	VERSION:	SHEET: 8/9
CHECKED		DATED			

CAMERA DSP

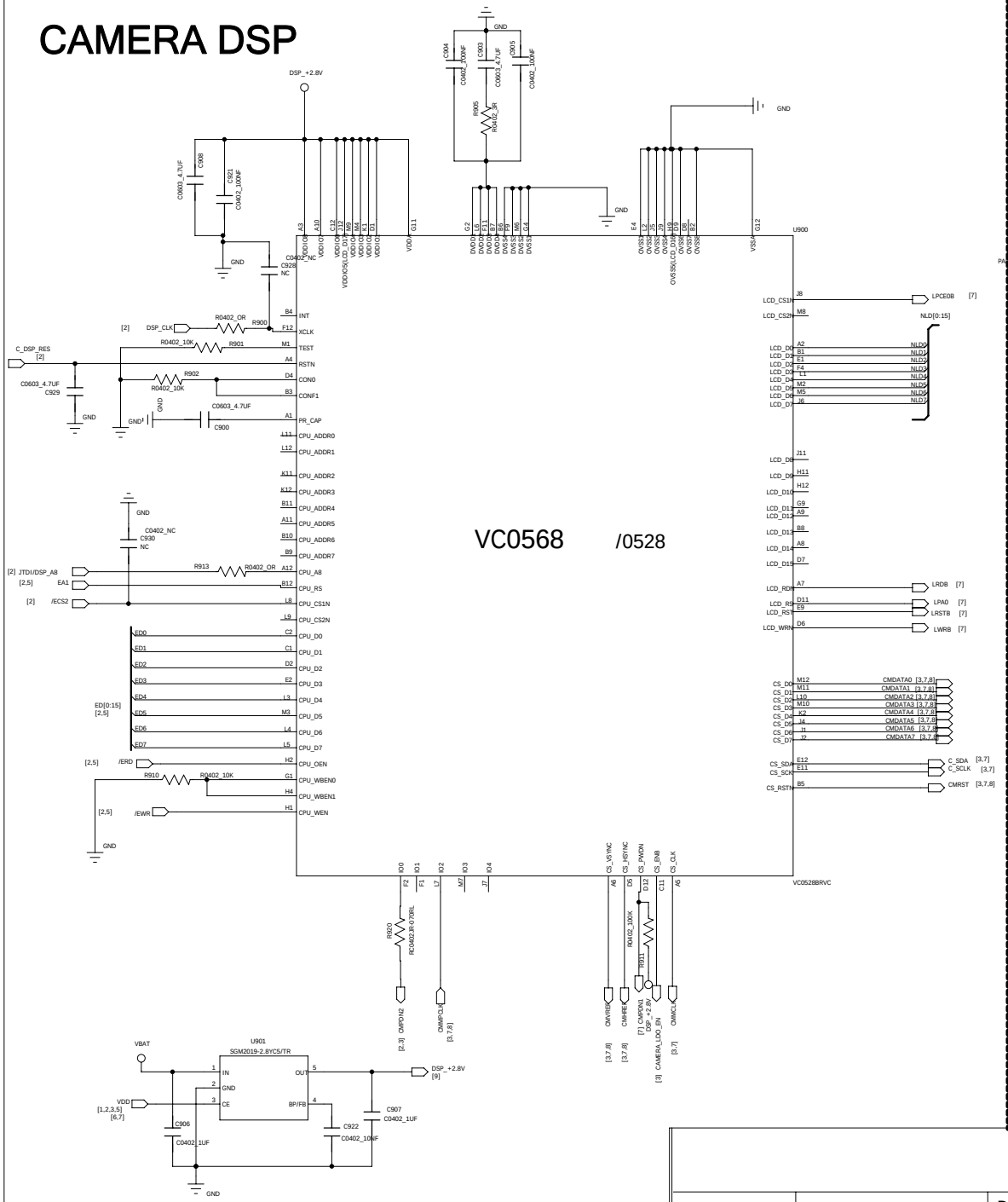

BLUETOOTH

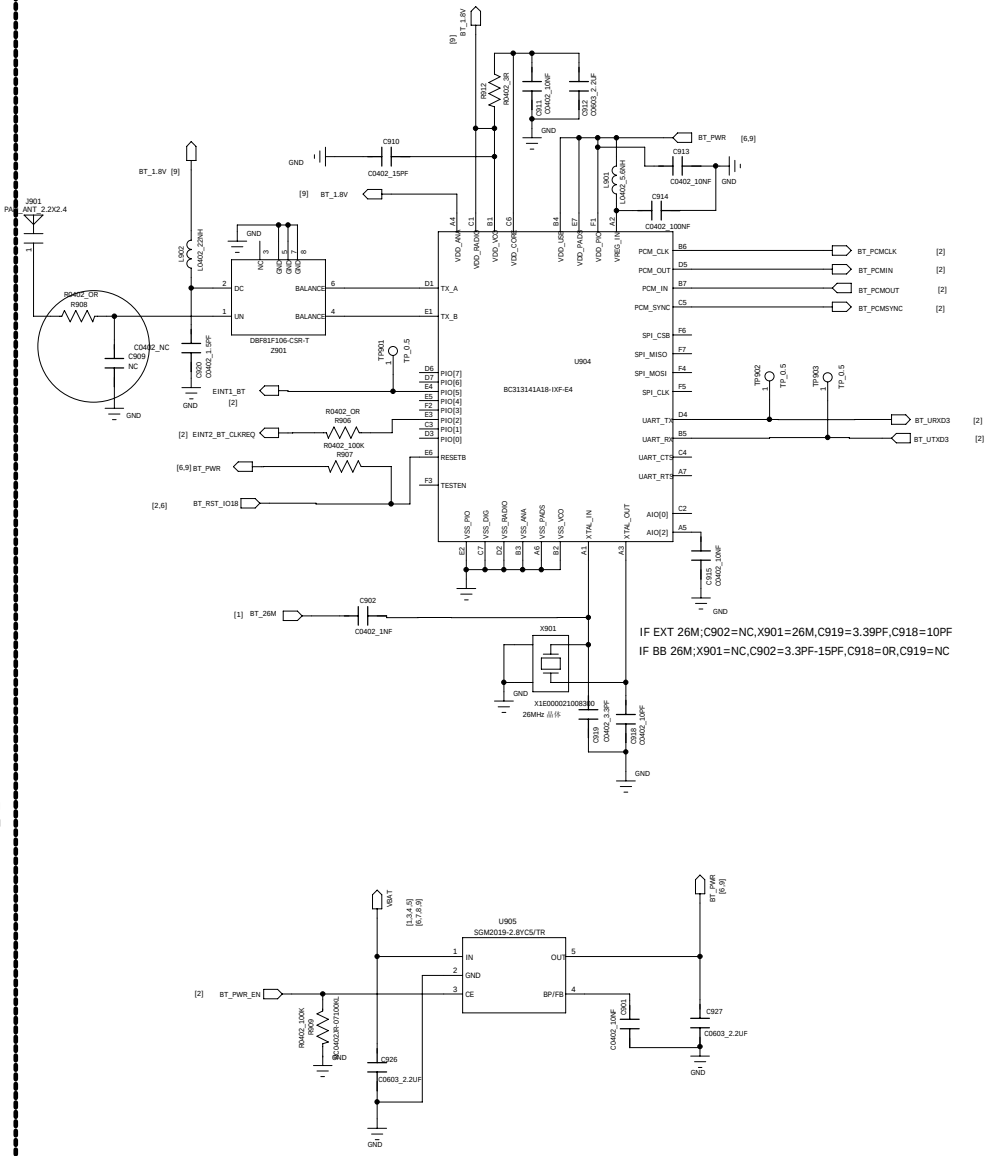

			MODEL:	DRAWING NO.:	
DRAWN		DATED			
CHECKED		DATED	TITLE: DSP,BT	VERSION:	SHEET: 9/9