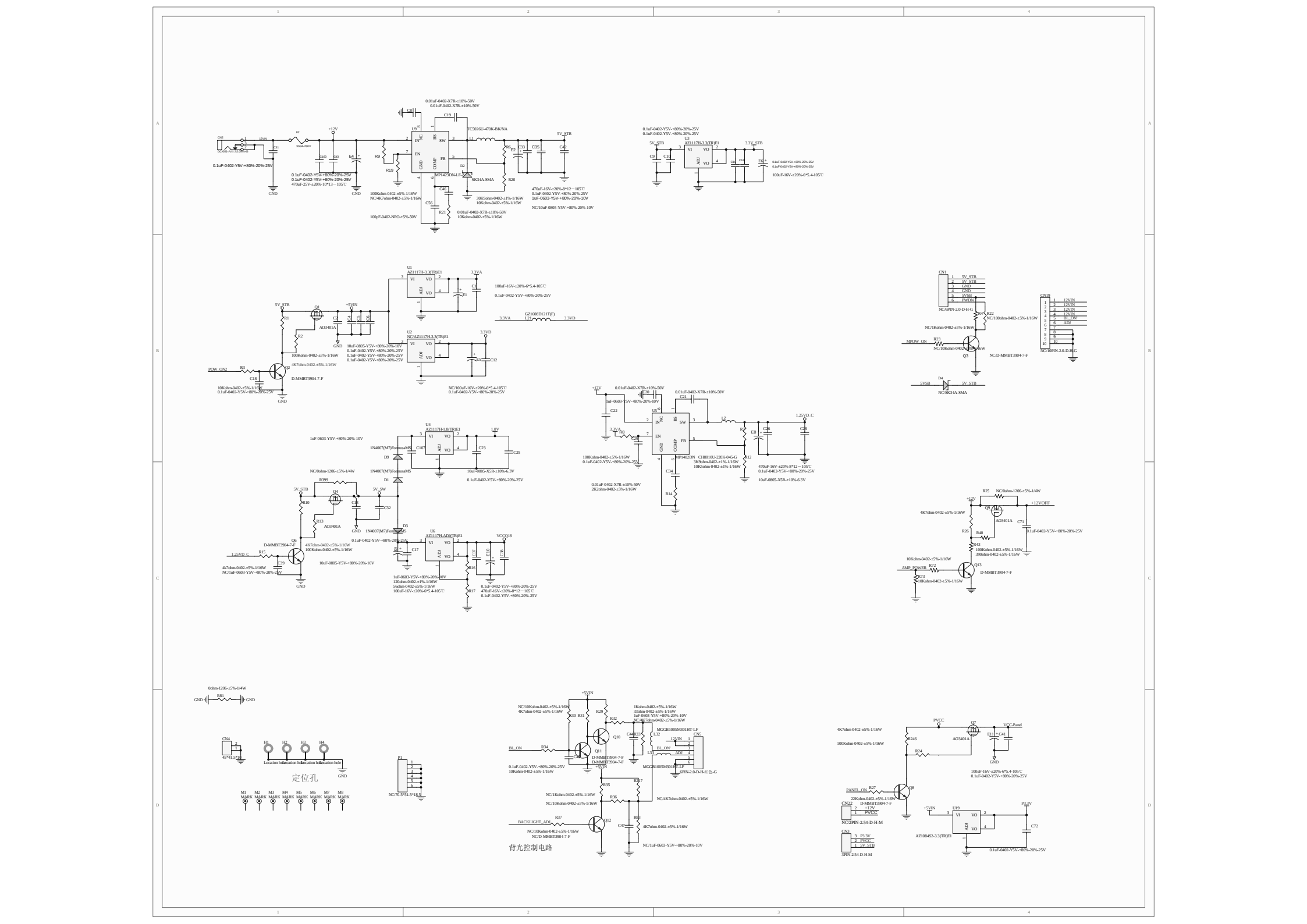
0.01uF-0402-X7R-±10%-50V
0.01uF-0402-X7R-±10%-50V
C8
C19
U5
TC5026U-470K-BK/NA
5V_STB
12VIN
F2
3.15A-250V
+12V
C160
C40
E4
R9
R19
L1
R6
E2
C33
C35
C42
D2
SK34A-SMA
R20
MP1425DN-LF-Z
C46
C56
R21
100Kohm-0402-±5%-1/16W
NC/4K7ohm-0402-±5%-1/16W
100pF-0402-NPO-±5%-50V
0.01uF-0402-X7R-±10%-50V
10Kohm-0402-±5%-1/16W
30K9ohm-0402-±1%-1/16W
10Kohm-0402-±5%-1/16W
470uF-16V-±20%-8*12～105℃
0.1uF-0402-Y5V-+80%-20%-25V
1uF-0603-Y5V-+80%-20%-10V
NC/10uF-0805-Y5V-+80%-20%-10V
0.1uF-0402-Y5V-+80%-20%-25V
0.1uF-0402-Y5V-+80%-20%-25V
47nF-25V-±20%-10*13～105℃
0.1uF-0402-Y5V-+80%-20%-25V
GND
0.1uF-0402-Y5V-+80%-20%-25V
0.1uF-0402-Y5V-+80%-20%-25V
U3
AZ1117H-3.3(TR)E1
5V_STB
3.3V_STB
C9
C10
C38
C39
E6
100uF-16V-±20%-6*5.4-105℃
U1
AZ1117H-3.3(TR)E1
3.3VA
C6
E1
100uF-16V-±20%-6*5.4-105℃
0.1uF-0402-Y5V-+80%-20%-25V
5V_STB
+5VIN
Q1
AO3401A
R1
R2
C1
C2
C3
C4
C5
100Kohm-0402-±5%-1/16W
4K7ohm-0402-±5%-1/16W
POW_ON2
R3
Q2
D-MMBT3904-7-F
C18
100Kohm-0402-±5%-1/16W
0.1uF-0402-Y5V-+80%-20%-25V
GZ1608D121T(F)
L21
3.3VA
3.3VD
U2
NC/AZ1117H-3.3(TR)E1
3.3VD
10uF-0805-Y5V-+80%-20%-10V
0.1uF-0402-Y5V-+80%-20%-25V
0.1uF-0402-Y5V-+80%-20%-25V
C11
E5
C12
NC/100uF-16V-±20%-6*5.4-105℃
0.1uF-0402-Y5V-+80%-20%-25V
CN1
5V_STB
5V_STB
GND
GND
5VSB
PWDN
NC/6PIN-2.0-D-H-G
R24
R22
NC/100ohm-0402-±5%-1/16W
NC/1Kohm-0402-±5%-1/16W
MPOW_ON
R23
NC/10Kohm-0402-±5%-1/16W
Q3
NC/D-MMBT3904-7-F
CN18
12VIN
12VIN
12VIN
12VIN
BL_ON
ADJ
NC/10PIN-2.0-D-H-G
D4
NC/SK34A-SMA
5VSB
5V_STB
U4
AZ1117H-1.8(TR)E1
1.8V
1uF-0603-Y5V-+80%-20%-10V
1N4007(M7)FeuossaMS
C107
C23
C25
D9
10uF-0805-X5R-±10%-6.3V
0.1uF-0402-Y5V-+80%-20%-25V
NC/0ohm-1206-±5%-1/4W
1N4007(M7)FeuossaMS
D1
R399
5V_STB
5V_SW
Q4
R10
R13
AO3401A
C31
C32
GND
1N4007(M7)FeuossaMS
D3
0.1uF-0402-Y5V-+80%-20%-25V
Q6
D-MMBT3904-7-F
4K7ohm-0402-±5%-1/16W
100Kohm-0402-±5%-1/16W
1.25VD_C
R15
4k7ohm-0402-±5%-1/16W
NC/1uF-0603-Y5V-+80%-20%-25V
C29
10uF-0805-Y5V-+80%-20%-10V
GND
U6
AZ1117H-ADJ(TR)E1
VCCQ18
R3
C17
C37
E10
C38
R16
R17
1uF-0603-Y5V-+80%-20%-10V
120ohm-0402-±1%-1/16W
56ohm-0402-±5%-1/16W
100uF-16V-±20%-6*5.4-105℃
0.1uF-0402-Y5V-+80%-20%-25V
470uF-16V-±20%-8*12～105℃
0.1uF-0402-Y5V-+80%-20%-25V
+12V
0.01uF-0402-X7R-±10%-50V
C20
0.01uF-0402-X7R-±10%-50V
C21
1uF-0603-Y5V-+80%-20%-10V
C22
U5
MP1482DN
CH8010L-220K-045-G
1.25VD_C
L2
3.3VA
R8
R7
E8
C26
C28
100Kohm-0402-±5%-1/16W
0.1uF-0402-Y5V-+80%-20%-25V
0.01uF-0402-X7R-±10%-50V
2K2ohm-0402-±5%-1/16W
C34
R14
3K3ohm-0402-±1%-1/16W
10K5ohm-0402-±1%-1/16W
R12
470uF-16V-±20%-8*12～105℃
0.1uF-0402-Y5V-+80%-20%-25V
10uF-0805-X5R-±10%-6.3V
R25
NC/0ohm-1206-±5%-1/4W
+12V
+12VOFF
4K7ohm-0402-±5%-1/16W
Q9
AO3401A
C71
0.1uF-0402-Y5V-+80%-20%-25V
R26
R40
R43
100Kohm-0402-±5%-1/16W
390ohm-0402-±5%-1/16W
10Kohm-0402-±5%-1/16W
AMP_POWER
R72
Q13
D-MMBT3904-7-F
R73
10Kohm-0402-±5%-1/16W
0ohm-1206-±5%-1/4W
GND
RR1
GND
CN4
45*41.5*1.6
H1
H2
H3
H4
Location hole
Location hole
Location hole
Location hole
GND
定位孔
M1
MARK
M2
MARK
M3
MARK
M4
M5
MARK
M6
MARK
M7
MARK
M8
MARK
P1
NC/70.5*51.5*16.5
+5VIN
NC/10Kohm-0402-±5%-1/16W
48K7ohm-0402-±5%-1/16W
R30
R31
R29
R32
1Kohm-0402-±5%-1/16W
33ohm-0402-±5%-1/16W
1uF-0603-Y5V-+80%-20%-10V
NC/4K7ohm-0402-±5%-1/16W
C44
C33
L32
MGGB1005M301HT-LF
CN5
12VIN
ADJ
BL_ON
MGGB1005M301HT-LF
6PIN-2.0-D-H-红色-G
BL_ON
R34
Q10
Q11
D-MMBT3904-7-F
D-MMBT3904-7-F
+5VIN
0.1uF-0402-Y5V-+80%-20%-25V
10Kohm-0402-±5%-1/16W
R27
R35
R36
R37
Q12
C47
R33
4K7ohm-0402-±5%-1/16W
NC/1Kohm-0402-±5%-1/16W
NC/10Kohm-0402-±5%-1/16W
NC/4K7ohm-0402-±5%-1/16W
BACKLIGHT_ADJ
NC/10Kohm-0402-±5%-1/16W
NC/D-MMBT3904-7-F
NC/1uF-0603-Y5V-+80%-20%-10V
背光控制电路
PVCC
Q7
VCC-Panel
4K7ohm-0402-±5%-1/16W
100Kohm-0402-±5%-1/16W
R246
AO3401A
F11
C41
R24
GND
100uF-16V-±20%-6*5.4-105℃
0.1uF-0402-Y5V-+80%-20%-25V
PANEL_ON
R27
Q8
22Kohm-0402-±5%-1/16W
D-MMBT3904-7-F
CN22
+12V
PVCC
NC/2PIN-2.54-D-H-M
CN3
P3.3V
PVCC
5V_STB
3PIN-2.54-D-H-M
+5VIN
U19
AZ1084S2-3.3(TR)E1
P3.3V
C72
0.1uF-0402-Y5V-+80%-20%-25V

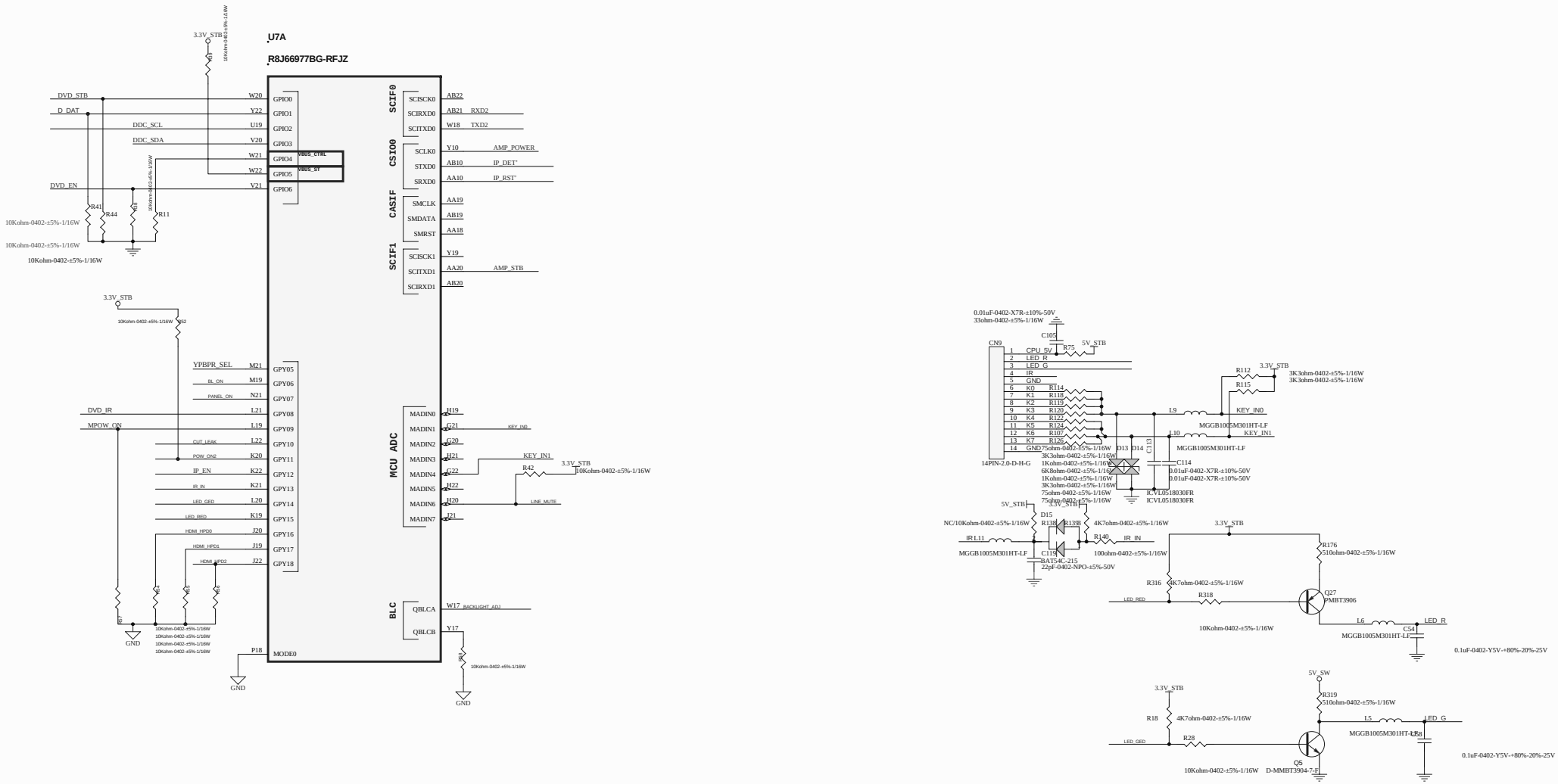

Title	DTV-C7		
Size	Document Number		Rev
A3	Renesas		
Date		Sheet 6 of 35	

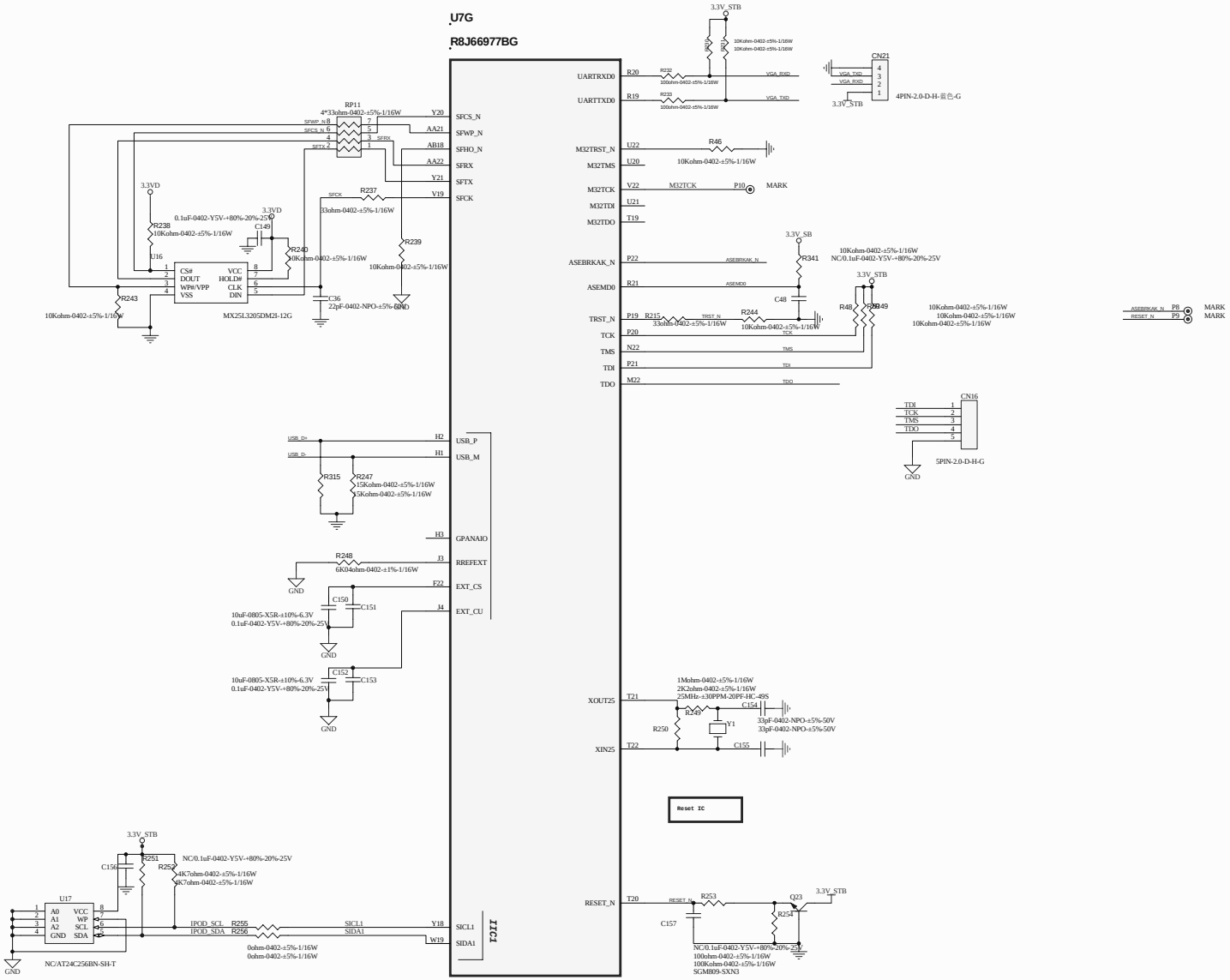

Title	DTV-C7		
Size	Document Number		Rev
A4	Renesas		A4
Date:		Sheet 10 of 15	

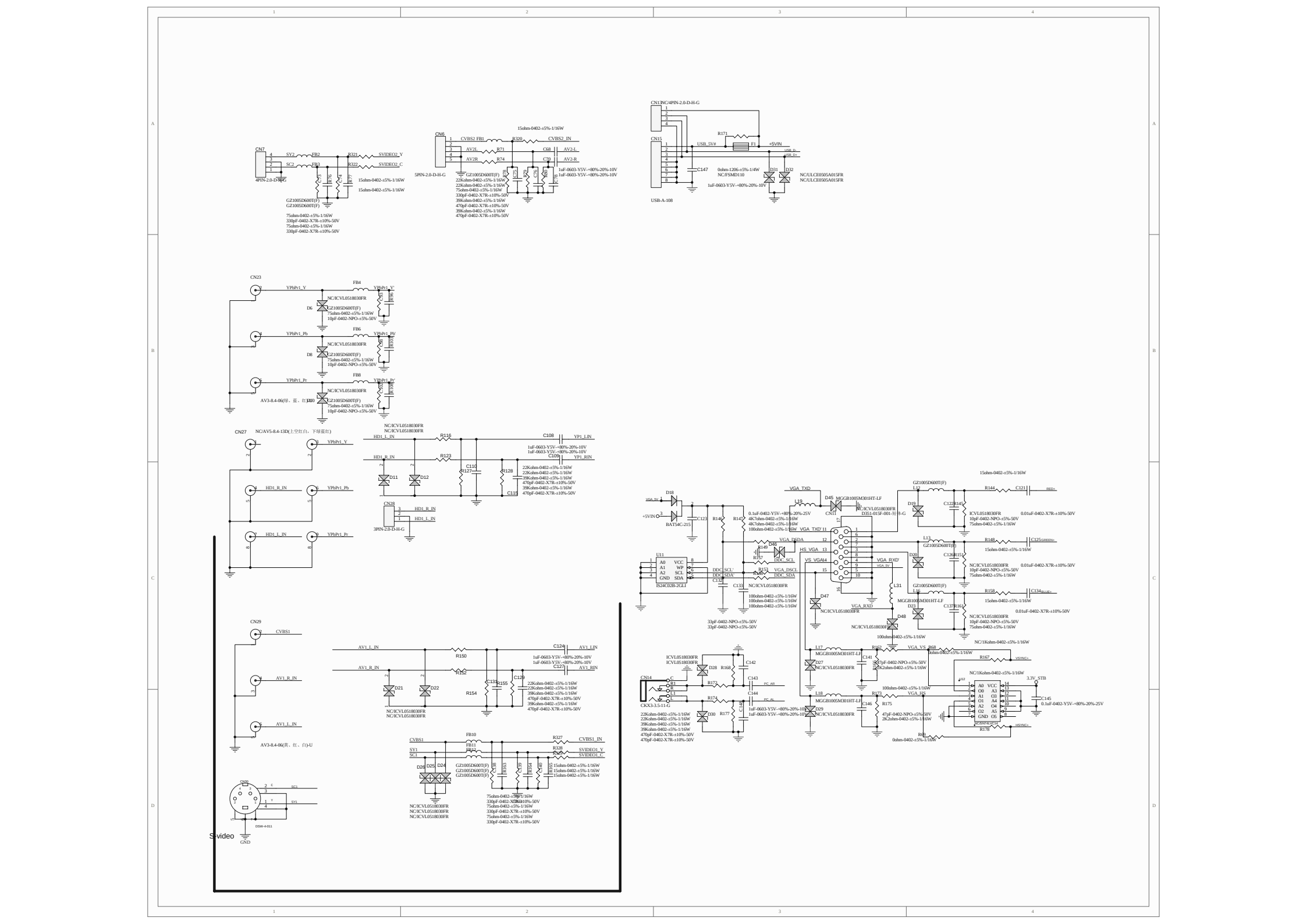
CN7
4PIN-2.0-D-H-G
SY2
SC2
FB2
FB3
R321
R322
SVIDEO2_Y
SVIDEO2_C
C75
R76
C74
R77
15ohm-0402-±5%-1/16W
15ohm-0402-±5%-1/16W
GZ1005D600T(F)
GZ1005D600T(F)
75ohm-0402-±5%-1/16W
330pF-0402-X7R-±10%-50V
75ohm-0402-±5%-1/16W
330pF-0402-X7R-±10%-50V
CN6
5PIN-2.0-D-H-G
CVBS2 FB1
AV2L
AV2R
R320
R71
R74
CVBS2_IN
C68
C70
AV2-L
AV2-R
15ohm-0402-±5%-1/16W
GZ1005D600T(F)
22Kohm-0402-±5%-1/16W
22Kohm-0402-±5%-1/16W
75ohm-0402-±5%-1/16W
330pF-0402-X7R-±10%-50V
39Kohm-0402-±5%-1/16W
470pF-0402-X7R-±10%-50V
39Kohm-0402-±5%-1/16W
470pF-0402-X7R-±10%-50V
C72
C73
C76
R69
C77
1uF-0603-Y5V-+80%-20%-10V
1uF-0603-Y5V-+80%-20%-10V
CN12
NC/4PIN-2.0-D-H-G
CN15
USB-A-108
USB_5V#
R171
F1
+5VIN
USB_D-
USB_D+
C147
0ohm-1206-±5%-1/4W
NC/FSMD110
1uF-0603-Y5V-+80%-20%-10V
D31
D32
NC/ULCE0505A015FR
NC/ULCE0505A015FR
CN23
AV3-8.4-06(绿、蓝、红)-U
YPbPr1_Y
YPbPr1_Pb
YPbPr1_Pr
FB4
FB6
FB8
YPbPr1_Y'
YPbPr1_Pb'
YPbPr1_Pr'
NC/ICVL0518030FR
GZ1005D600T(F)
D6
D8
D10
R68
R69
R70
C69
C71
C78
75ohm-0402-±5%-1/16W
10pF-0402-NPO-±5%-50V
CN27
NC/AV5-8.4-13D(上空红白，下绿蓝红)
YPbPr1_Y
HD1_R_IN
YPbPr1_Pb
HD1_L_IN
YPbPr1_Pr
NC/ICVL0518030FR
NC/ICVL0518030FR
HD1_L_IN
HD1_R_IN
R116
R123
C110
R127
R128
C115
C108
C109
YP1_LIN
YP1_RIN
1uF-0603-Y5V-+80%-20%-10V
1uF-0603-Y5V-+80%-20%-10V
22Kohm-0402-±5%-1/16W
22Kohm-0402-±5%-1/16W
39Kohm-0402-±5%-1/16W
470pF-0402-X7R-±10%-50V
39Kohm-0402-±5%-1/16W
470pF-0402-X7R-±10%-50V
D11
D12
CN28
3PIN-2.0-D-H-G
CN29
AV3-8.4-06(黄、红、白)-U
CVBS1
AV1_R_IN
AV1_L_IN
AV1_L_IN
AV1_R_IN
R150
R152
R154
C131
R155
C129
C124
C127
AV1_LIN
AV1_RIN
1uF-0603-Y5V-+80%-20%-10V
1uF-0603-Y5V-+80%-20%-10V
22Kohm-0402-±5%-1/16W
72Kohm-0402-±5%-1/16W
39Kohm-0402-±5%-1/16W
470pF-0402-X7R-±10%-50V
39Kohm-0402-±5%-1/16W
470pF-0402-X7R-±10%-50V
D21
D22
NC/ICVL0518030FR
NC/ICVL0518030FR
CN30
DSW-4-011
S-video
GND
SC1
SY1
CVBS1
SY1
SC1
FB10
FB11
FB12
R327
R328
R329
CVBS1_IN
SVIDEO1_Y
SVIDEO1_C
D26
D25
D24
R163
R59
R164
R60
R162
15ohm-0402-±5%-1/16W
15ohm-0402-±5%-1/16W
15ohm-0402-±5%-1/16W
GZ1005D600T(F)
GZ1005D600T(F)
GZ1005D600T(F)
75ohm-0402-±5%-1/16W
330pF-0402-X7R-±10%-50V
75ohm-0402-±5%-1/16W
330pF-0402-X7R-±10%-50V
75ohm-0402-±5%-1/16W
330pF-0402-X7R-±10%-50V
NC/ICVL0518030FR
NC/ICVL0518030FR
NC/ICVL0518030FR
VGA_TXD
VGA_RXD
VGA_RXD'
VGA_DSDA
VGA_DSCL
DDC_SCL
DDC_SDA
HS_VGA
VS_VGA
D18
BAT54C-215
+5VIN
VGA_5V
C123
R146
R147
0.1uF-0402-Y5V-+80%-20%-25V
4K7ohm-0402-±5%-1/16W
4K7ohm-0402-±5%-1/16W
100ohm-0402-±5%-1/16W
U11
IS24C02B-2GLI
R149
R150
R151
R153
C132
C133
C130
NC/ICVL0518030FR
100ohm-0402-±5%-1/16W
100ohm-0402-±5%-1/16W
100ohm-0402-±5%-1/16W
33pF-0402-NPO-±5%-50V
33pF-0402-NPO-±5%-50V
D45
MGGB1005M301HT-LF
NC/ICVL0518030FR
CN11
D351-015F-001-短-6-G
L19
L12
GZ1005D600T(F)
15ohm-0402-±5%-1/16W
D19
C122
R145
R144
C121
RED+
ICVL0518030FR
10pF-0402-NPO-±5%-50V
75ohm-0402-±5%-1/16W
0.01uF-0402-X7R-±10%-50V
D46
D20
C126
R156
L13
GZ1005D600T(F)
R148
C125
GREEN+
15ohm-0402-±5%-1/16W
NC/ICVL0518030FR
10pF-0402-NPO-±5%-50V
75ohm-0402-±5%-1/16W
0.01uF-0402-X7R-±10%-50V
L16
GZ1005D600T(F)
R158
C134
BLUE+
15ohm-0402-±5%-1/16W
D47
D23
C137
R161
MGGB1005M301HT-LF
NC/ICVL0518030FR
NC/ICVL0518030FR
10pF-0402-NPO-±5%-50V
75ohm-0402-±5%-1/16W
0.01uF-0402-X7R-±10%-50V
D48
100ohm-0402-±5%-1/16W
L31
MGGB1005M301HT-LF
L17
MGGB1005M301HT-LF
D27
NC/ICVL0518030FR
R162
R168
VGA_VS
NC/1Kohm-0402-±5%-1/16W
0ohm-0402-±5%-1/16W
R167
VSYNC+
C141
27pF-0402-NPO-±5%-50V
2K2ohm-0402-±5%-1/16W
100ohm-0402-±5%-1/16W
L18
MGGB1005M301HT-LF
D29
NC/ICVL0518030FR
R163
R175
VGA_HS
47pF-0402-NPO-±5%-50V
2K2ohm-0402-±5%-1/16W
R165
0ohm-0402-±5%-1/16W
R178
HSYNC+
3.3V_STB
C145
0.1uF-0402-Y5V-+80%-20%-25V
CN14
CKX3-3.5-11-G
ICVL0518030FR
ICVL0518030FR
D28
D30
R168
R172
R174
R177
C142
C143
C144
C146
FC_AR
FC_AL
22Kohm-0402-±5%-1/16W
22Kohm-0402-±5%-1/16W
39Kohm-0402-±5%-1/16W
39Kohm-0402-±5%-1/16W
470pF-0402-X7R-±10%-50V
470pF-0402-X7R-±10%-50V
1uF-0603-Y5V-+80%-20%-10V
1uF-0603-Y5V-+80%-20%-10V
U12
SN74LV4T125

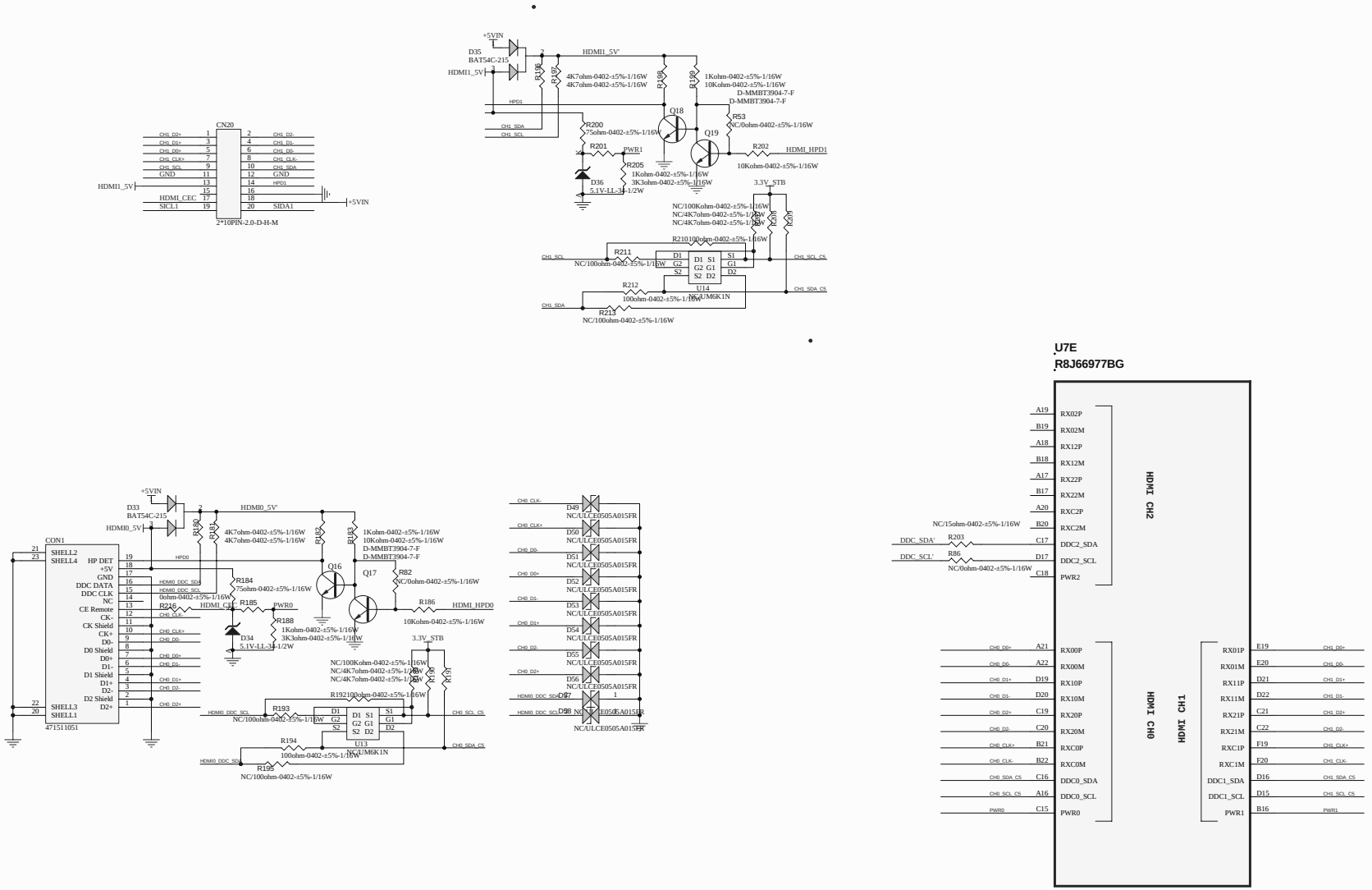

CN20
2*10PIN-2.0-D-H-M
HDMI1_5V
HDMI1_5V'
D35
BAT54C-215
R196
R197
R198
R199
4K7ohm-0402-±5%-1/16W
1Kohm-0402-±5%-1/16W
10Kohm-0402-±5%-1/16W
D-MMBT3904-7-F
Q18
Q19
R53
NC/0ohm-0402-±5%-1/16W
R200
75ohm-0402-±5%-1/16W
R201
PWR1
R205
3K3ohm-0402-±5%-1/16W
D36
5.1V-LL-34-1/2W
R202
HDMI_HPD1
10Kohm-0402-±5%-1/16W
3.3V_STB
NC/100Kohm-0402-±5%-1/16W
NC/4K7ohm-0402-±5%-1/16W
R210
100ohm-0402-±5%-1/16W
R211
NC/100ohm-0402-±5%-1/16W
R212
100ohm-0402-±5%-1/16W
R213
NC/100ohm-0402-±5%-1/16W
U14
NC/UM6K1N
CH1_SCL_CS
CH1_SDA_CS
U7E
R8J66977BG
HDMI CH2
HDMI CH0
HDMI CH1
RX02P
RX02M
RX12P
RX12M
RX22P
RX22M
RXC2P
RXC2M
DDC2_SDA
DDC2_SCL
PWR2
NC/15ohm-0402-±5%-1/16W
R203
R86
NC/0ohm-0402-±5%-1/16W
DDC_SDA'
DDC_SCL'
RX00P
RX00M
RX10P
RX10M
RX20P
RX20M
RXC0P
RXC0M
DDC0_SDA
DDC0_SCL
PWR0
RX01P
RX01M
RX11P
RX11M
RX21P
RX21M
RXC1P
RXC1M
DDC1_SDA
DDC1_SCL
PWR1
CON1
SHELL2
SHELL4
HP DET
+5V
GND
DDC DATA
DDC CLK
NC
CE Remote
CK-
CK Shield
CK+
D0-
D0 Shield
D0+
D1-
D1 Shield
D1+
D2-
D2 Shield
D2+
SHELL3
SHELL1
471511051
D33
BAT54C-215
HDMI0_5V
HDMI0_5V'
R180
R181
R182
R183
4K7ohm-0402-±5%-1/16W
1Kohm-0402-±5%-1/16W
10Kohm-0402-±5%-1/16W
D-MMBT3904-7-F
Q16
Q17
R82
NC/0ohm-0402-±5%-1/16W
R184
75ohm-0402-±5%-1/16W
R216
R185
PWR0
R188
1Kohm-0402-±5%-1/16W
3K3ohm-0402-±5%-1/16W
D34
5.1V-LL-34-1/2W
R186
HDMI_HPD0
10Kohm-0402-±5%-1/16W
3.3V_STB
NC/100Kohm-0402-±5%-1/16W
NC/4K7ohm-0402-±5%-1/16W
R190
R191
R192
100ohm-0402-±5%-1/16W
R193
NC/100ohm-0402-±5%-1/16W
R194
100ohm-0402-±5%-1/16W
R195
NC/100ohm-0402-±5%-1/16W
U13
NC/UM6K1N
D49
D50
D51
D52
D53
D54
D55
D56
D57
D58
NC/ULCE0505A015FR

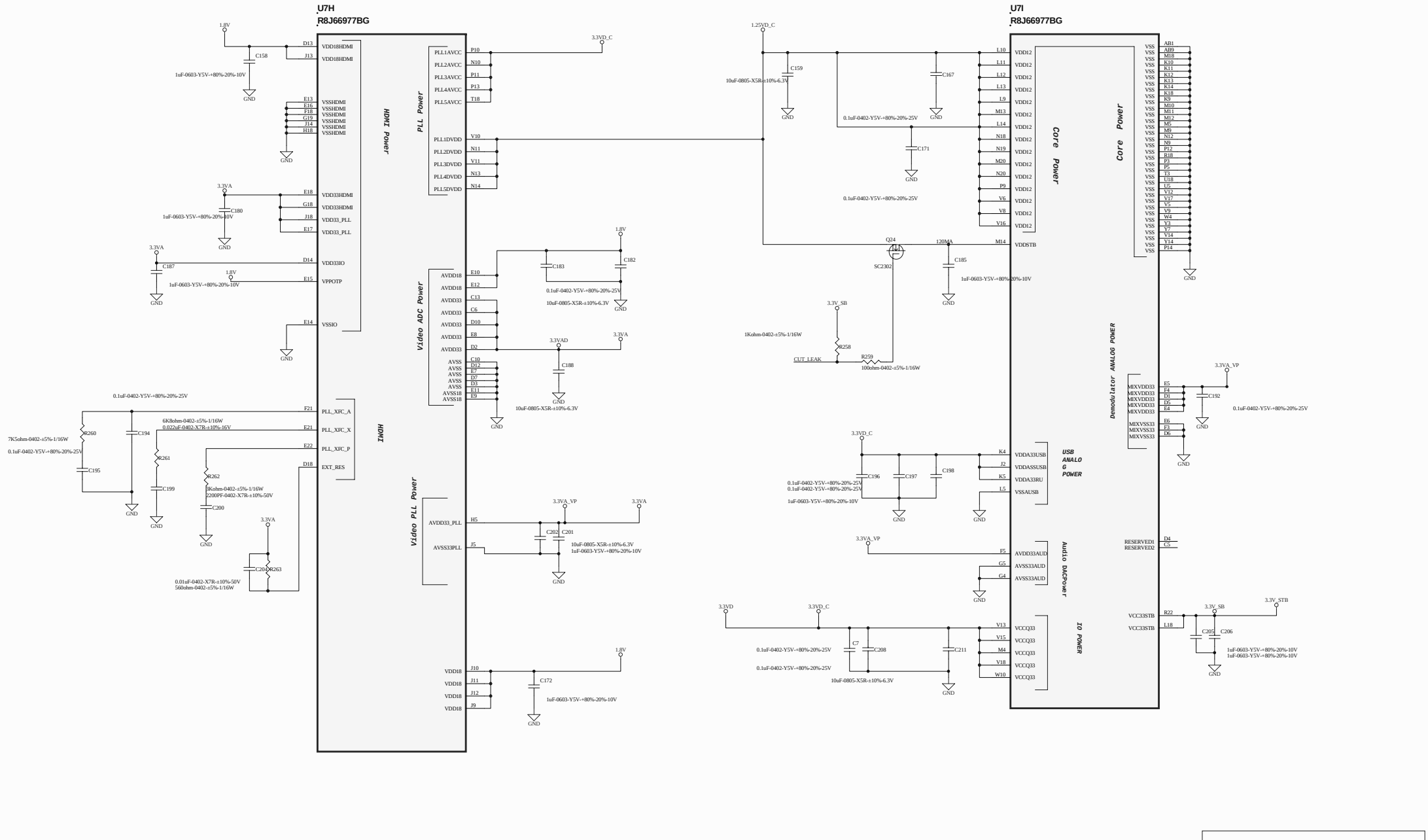
U7H
R8J66977BG
HDMI Power
PLL Power
Video ADC Power
Video PLL Power
HDMI
VDD18HDMI
VSSHDMI
VDD33HDMI
VDD33_PLL
VDD33IO
VPPOTP
VSSIO
PLL_XFC_A
PLL_XFC_X
PLL_XFC_P
EXT_RES
PLL1AVCC
PLL2AVCC
PLL3AVCC
PLL4AVCC
PLL5AVCC
PLL1DVDD
PLL2DVDD
PLL3DVDD
PLL4DVDD
PLL5DVDD
AVDD18
AVDD33
AVSS
AVSS18
AVDD33_PLL
AVSS33PLL
VDD18
U7I
R8J66977BG
Core Power
Demodulator ANALOG POWER
USB ANALOG POWER
Audio DACPower
IO POWER
VDD12
VDDSTB
MXVDD33
MXVSS33
VDDA33USB
VDDASSUSB
VDDA33RU
VSSAUSB
AVDD33AUD
AVSS33AUD
RESERVED1
RESERVED2
VCCQ33
VCC33STB
VSS
1.8V
3.3VD_C
1.25VD_C
3.3VA
3.3VA_VP
3.3VAD
3.3V_SB
3.3V_STB
3.3VD
GND
SC2302
CUT_LEAK
1uF-0603-Y5V-+80%-20%-10V
0.1uF-0402-Y5V-+80%-20%-25V
10uF-0805-X5R-±10%-6.3V
1Kohm-0402-±5%-1/16W
100ohm-0402-±5%-1/16W
7K5ohm-0402-±5%-1/16W
6K8ohm-0402-±5%-1/16W
0.022uF-0402-X7R-±10%-16V
3Kohm-0402-±5%-1/16W
2200PF-0402-X7R-±10%-50V
0.01uF-0402-X7R-±10%-50V
560ohm-0402-±5%-1/16W
1uF-0603-Y5V-+80%-20%-10V
1uF-0603-Y5V-+80%-20%-10V
10uF-0805-X5R-±10%-6.3V
1uF-0603-Y5V-+80%-20%-10V
0.1uF-0402-Y5V-+80%-20%-25V
0.1uF-0402-Y5V-+80%-20%-25V
0.1uF-0402-Y5V-+80%-20%-25V
0.1uF-0402-Y5V-+80%-20%-25V
0.1uF-0402-Y5V-+80%-20%-25V
0.1uF-0402-Y5V-+80%-20%-25V
0.1uF-0402-Y5V-+80%-20%-25V
10uF-0805-X5R-±10%-6.3V
1uF-0603-Y5V-+80%-20%-10V
1uF-0603-Y5V-+80%-20%-10V
1uF-0603-Y5V-+80%-20%-10

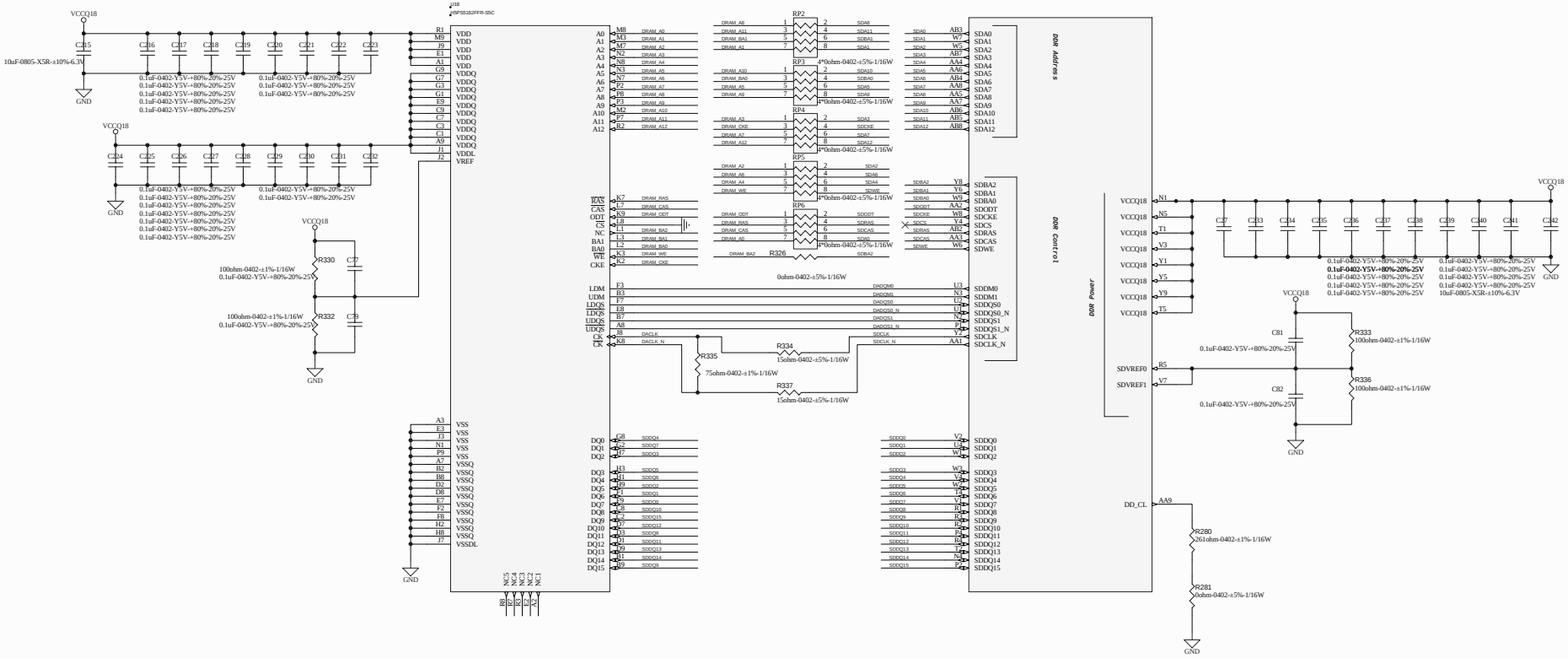
VCCQ18
GND
U18
H5P55162FFR-55C
VDD
VSS
VDDQ
VSSQ
VDDL
VSSDL
VREF
DRAM_A0
DRAM_A1
DRAM_A2
DRAM_A3
DRAM_A4
DRAM_A5
DRAM_A6
DRAM_A7
DRAM_A8
DRAM_A9
DRAM_A10
DRAM_A11
DRAM_A12
DRAM_BA0
DRAM_BA1
DRAM_BA2
DRAM_RAS
DRAM_CAS
DRAM_WE
DRAM_CKE
DRAM_ODT
DACLK
DACLK_N
SDDQ0
SDDQ1
SDDQ2
SDDQ3
SDDQ4
SDDQ5
SDDQ6
SDDQ7
SDDQ8
SDDQ9
SDDQ10
SDDQ11
SDDQ12
SDDQ13
SDDQ14
SDDQ15
NC5
NC4
NC3
NC2
NC1
RP2
RP3
RP4
RP5
RP6
4*0ohm-0402-±5%-1/16W
R326
0ohm-0402-±5%-1/16W
R334
15ohm-0402-±5%-1/16W
R335
75ohm-0402-±1%-1/16W
R337
15ohm-0402-±5%-1/16W
U72
H8366977BG
DDR Address
DDR Control
DDR Power
SDA0
SDA1
SDA2
SDA3
SDA4
SDA5
SDA6
SDA7
SDA8
SDA9
SDA10
SDA11
SDA12
SDBA0
SDBA1
SDBA2
SDCKE
SDCS
SDRAS
SDCAS
SDWE
SDDM0
SDDM1
SDDQS0
SDDQS0_N
SDDQS1
SDDQS1_N
SDCLK
SDCLK_N
SDDQ0
SDDQ1
SDDQ2
SDDQ3
SDDQ4
SDDQ5
SDDQ6
SDDQ7
SDDQ8
SDDQ9
SDDQ10
SDDQ11
SDDQ12
SDDQ13
SDDQ14
SDDQ15
VCCQ18
SDVREF0
SDVREF1
DD_CL
R280
261ohm-0402-±1%-1/16W
R281
0ohm-0402-±5%-1/16W
R330
100ohm-0402-±1%-1/16W
R332
100ohm-0402-±1%-1/16W
R333
100ohm-0402-±1%-1/16W
R336
100ohm-0402-±1%-1/16W
C81
C82
0.1uF-0402-Y5V-+80%-20%-25V
10uF-0805-X5R-±10%-6.3V
Title
PTV-C7
Size
Document Number
Renesas
Rev
Date:
Sheet
of

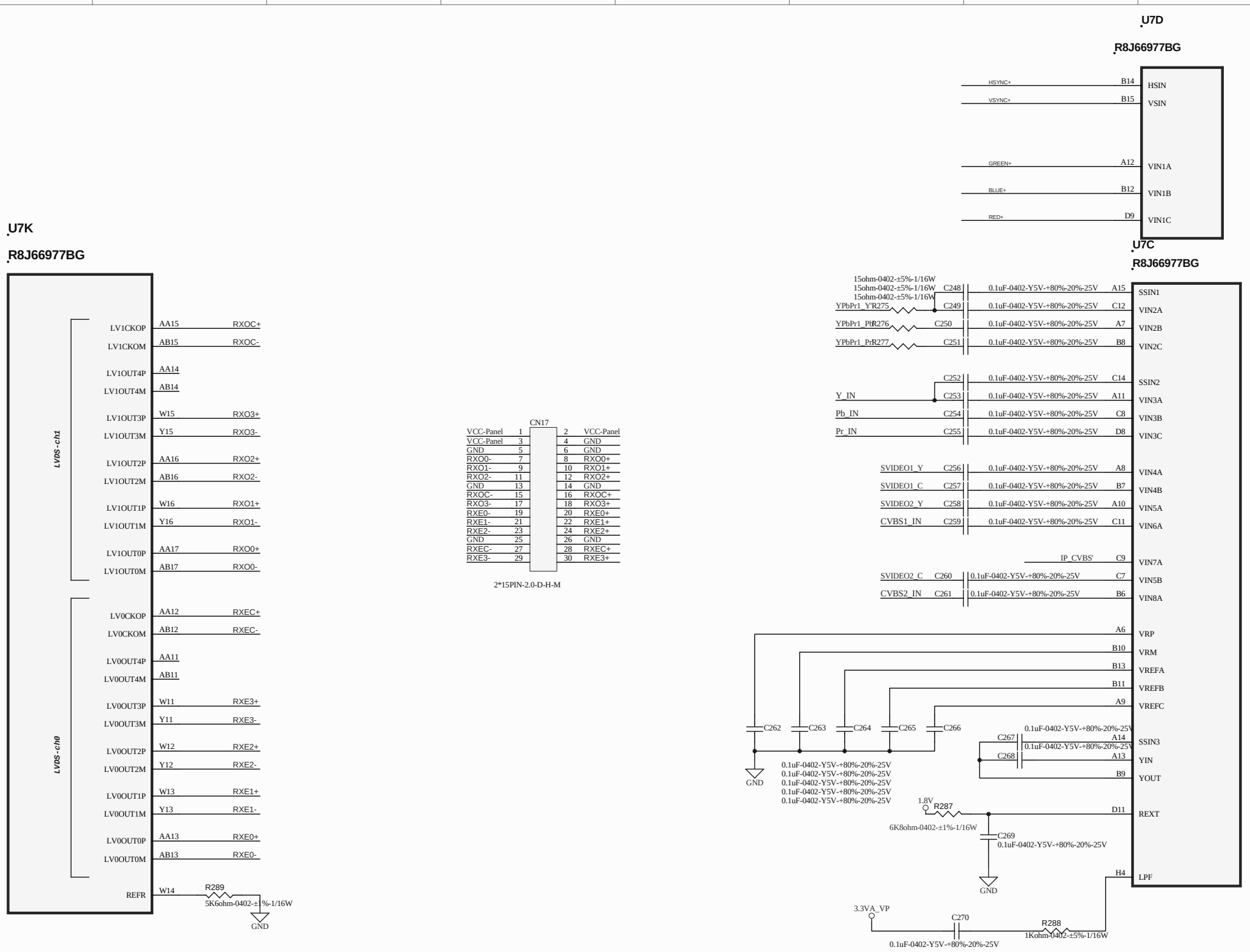
U7K
R8J66977BG
LVDS-ch1
LV1CKOP AA15 RXOC+
LV1CKOM AB15 RXOC-
LV1OUT4P AA14
LV1OUT4M AB14
LV1OUT3P W15 RXO3+
LV1OUT3M Y15 RXO3-
LV1OUT2P AA16 RXO2+
LV1OUT2M AB16 RXO2-
LV1OUT1P W16 RXO1+
LV1OUT1M Y16 RXO1-
LV1OUT0P AA17 RXO0+
LV1OUT0M AB17 RXO0-
LVDS-ch0
LV0CKOP AA12 RXEC+
LV0CKOM AB12 RXEC-
LV0OUT4P AA11
LV0OUT4M AB11
LV0OUT3P W11 RXE3+
LV0OUT3M Y11 RXE3-
LV0OUT2P W12 RXE2+
LV0OUT2M Y12 RXE2-
LV0OUT1P W13 RXE1+
LV0OUT1M Y13 RXE1-
LV0OUT0P AA13 RXE0+
LV0OUT0M AB13 RXE0-
REFR W14
R289
5K6ohm-0402-±1%-1/16W
GND
CN17
VCC-Panel 1 2 VCC-Panel
VCC-Panel 3 4 GND
GND 5 6 GND
RXO0- 7 8 RXO0+
RXO1- 9 10 RXO1+
RXO2- 11 12 RXO2+
GND 13 14 GND
RXOC- 15 16 RXOC+
RXO3- 17 18 RXO3+
RXE0- 19 20 RXE0+
RXE1- 21 22 RXE1+
RXE2- 23 24 RXE2+
GND 25 26 GND
RXEC- 27 28 RXEC+
RXE3- 29 30 RXE3+
2*15PIN-2.0-D-H-M
U7D
R8J66977BG
HSYNC+ B14 HSIN
VSYNC+ B15 VSIN
GREEN+ A12 VIN1A
BLUE+ B12 VIN1B
RED+ D9 VIN1C
U7C
R8J66977BG
15ohm-0402-±5%-1/16W
15ohm-0402-±5%-1/16W
15ohm-0402-±5%-1/16W
YPbPr1_Y'R275 C248 0.1uF-0402-Y5V-+80%-20%-25V A15 SSIN1
YPbPr1_PbR276 C249 0.1uF-0402-Y5V-+80%-20%-25V C12 VIN2A
YPbPr1_PrR277 C250 0.1uF-0402-Y5V-+80%-20%-25V A7 VIN2B
C251 0.1uF-0402-Y5V-+80%-20%-25V B8 VIN2C
C252 0.1uF-0402-Y5V-+80%-20%-25V C14 SSIN2
Y_IN C253 0.1uF-0402-Y5V-+80%-20%-25V A11 VIN3A
Pb_IN C254 0.1uF-0402-Y5V-+80%-20%-25V C8 VIN3B
Pr_IN C255 0.1uF-0402-Y5V-+80%-20%-25V D8 VIN3C
SVIDEO1_Y C256 0.1uF-0402-Y5V-+80%-20%-25V A8 VIN4A
SVIDEO1_C C257 0.1uF-0402-Y5V-+80%-20%-25V B7 VIN4B
SVIDEO2_Y C258 0.1uF-0402-Y5V-+80%-20%-25V A10 VIN5A
CVBS1_IN C259 0.1uF-0402-Y5V-+80%-20%-25V C11 VIN6A
IP_CVBS' C9 VIN7A
SVIDEO2_C C260 0.1uF-0402-Y5V-+80%-20%-25V C7 VIN5B
CVBS2_IN C261 0.1uF-0402-Y5V-+80%-20%-25V B6 VIN8A
A6 VRP
B10 VRM
B13 VREFA
B11 VREFB
A9 VREFC
C262 C263 C264 C265 C266
0.1uF-0402-Y5V-+80%-20%-25V
0.1uF-0402-Y5V-+80%-20%-25V
0.1uF-0402-Y5V-+80%-20%-25V
0.1uF-0402-Y5V-+80%-20%-25V
0.1uF-0402-Y5V-+80%-20%-25V
GND
C267 0.1uF-0402-Y5V-+80%-20%-25V A14 SSIN3
C268 0.1uF-0402-Y5V-+80%-20%-25V A13 YIN
B9 YOUT
1.8V
R287
6K8ohm-0402-±1%-1/16W
D11 REXT
C269
0.1uF-0402-Y5V-+80%-20%-25V
GND
H4 LPF
3.3VA_VP
C270
0.1uF-0402-Y5V-+80%-20%-25V
R288
1Kohm-0402-±5%-1/16W

U7L

R8J66977BG

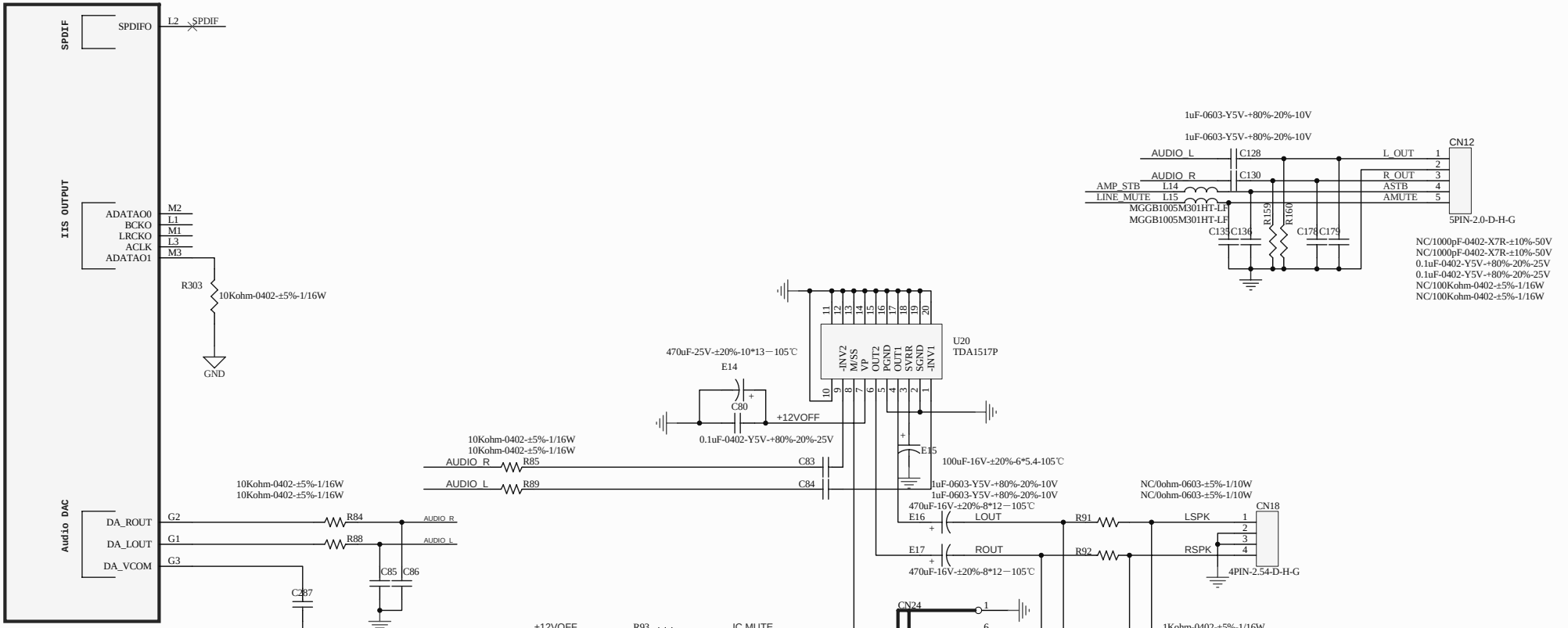

U7F

R8J66977BG

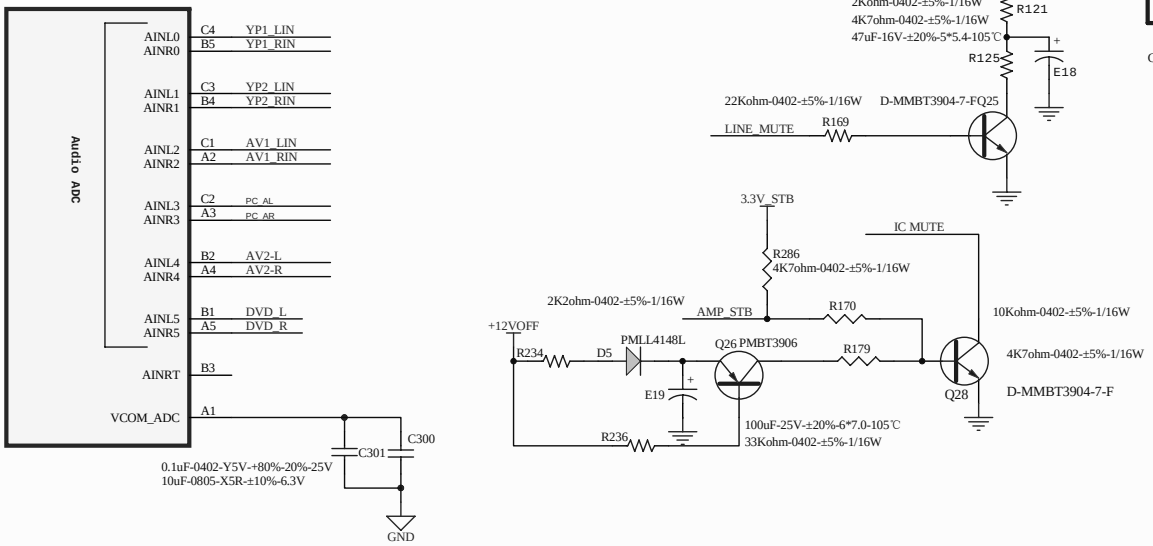

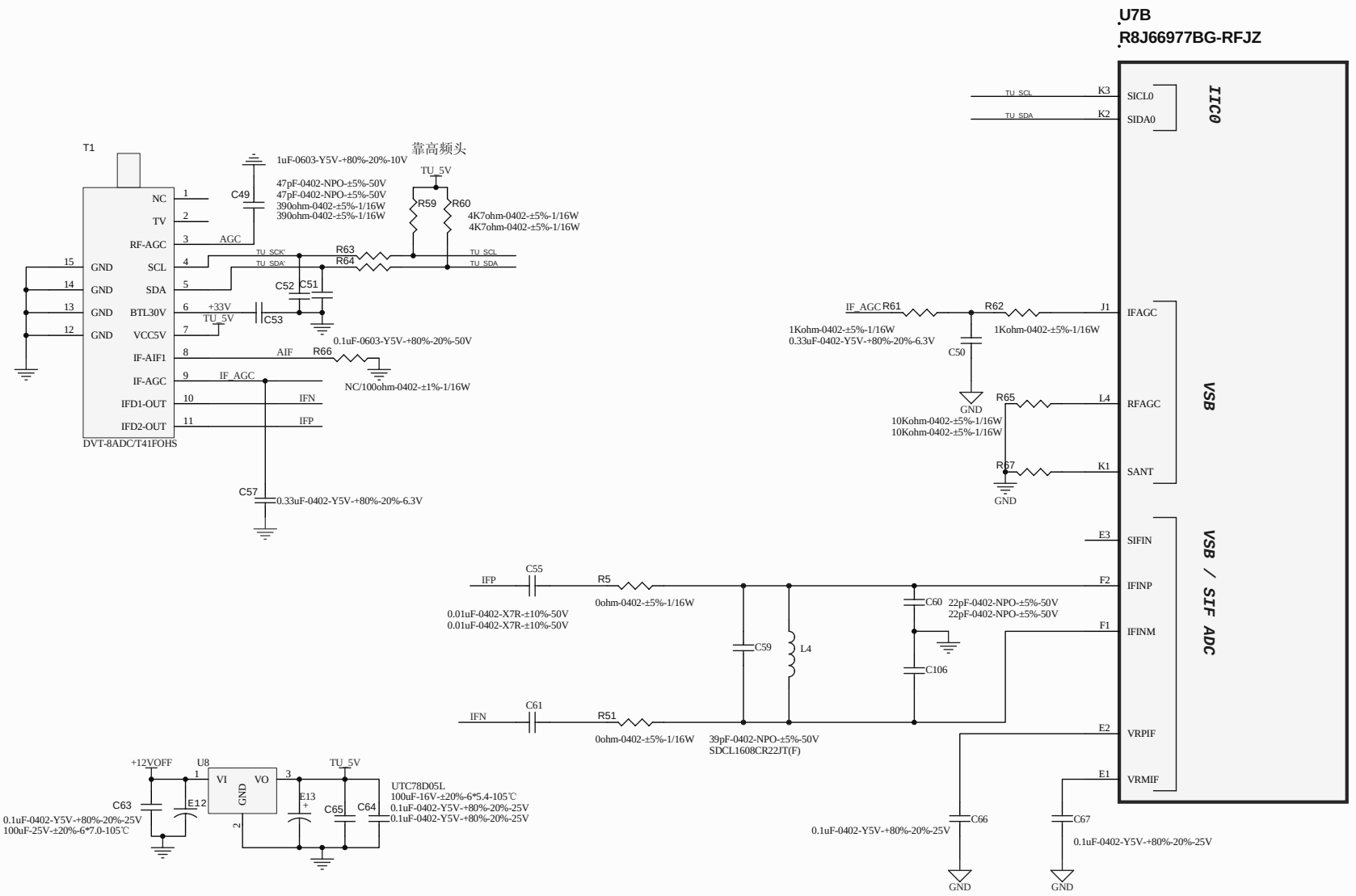
U7B
R8J66977BG-RFJZ
IIC0
VSB
VSB / SIF ADC
SICL0
SIDA0
IFAGC
RFAGC
SANT
SIFIN
IFINP
IFINM
VRPIF
VRMIF
K3
K2
J1
L4
K1
E3
F2
F1
E2
E1
TU_SCL
TU_SDA
IF_AGC
R61
R62
1Kohm-0402-±5%-1/16W
0.33uF-0402-Y5V-+80%-20%-6.3V
C50
GND
R65
10Kohm-0402-±5%-1/16W
R67
C66
0.1uF-0402-Y5V-+80%-20%-25V
C67
T1
靠高频头
1uF-0603-Y5V-+80%-20%-10V
C49
47pF-0402-NPO-±5%-50V
390ohm-0402-±5%-1/16W
TU_5V
R59
R60
4K7ohm-0402-±5%-1/16W
R63
R64
C52
C51
C53
+33V
0.1uF-0603-Y5V-+80%-20%-50V
AIF
R66
NC/100ohm-0402-±1%-1/16W
C57
0.33uF-0402-Y5V-+80%-20%-6.3V
NC
TV
RF-AGC
SCL
SDA
BTL30V
VCC5V
IF-AIF1
IF-AGC
IFD1-OUT
IFD2-OUT
GND
AGC
IFN
IFP
DVT-8ADC/T41FOHS
C55
R5
0ohm-0402-±5%-1/16W
0.01uF-0402-X7R-±10%-50V
C59
L4
C60
22pF-0402-NPO-±5%-50V
C106
C61
R51
39pF-0402-NPO-±5%-50V
SDCL1608CR22JT(F)
+12VOFF
U8
VI
VO
GND
UTC78D05L
100uF-16V-±20%-6*5.4-105℃
C63
E12
E13
C65
C64
0.1uF-0402-Y5V-+80%-20%-25V
100uF-25V-±20%-6*7.0-105℃

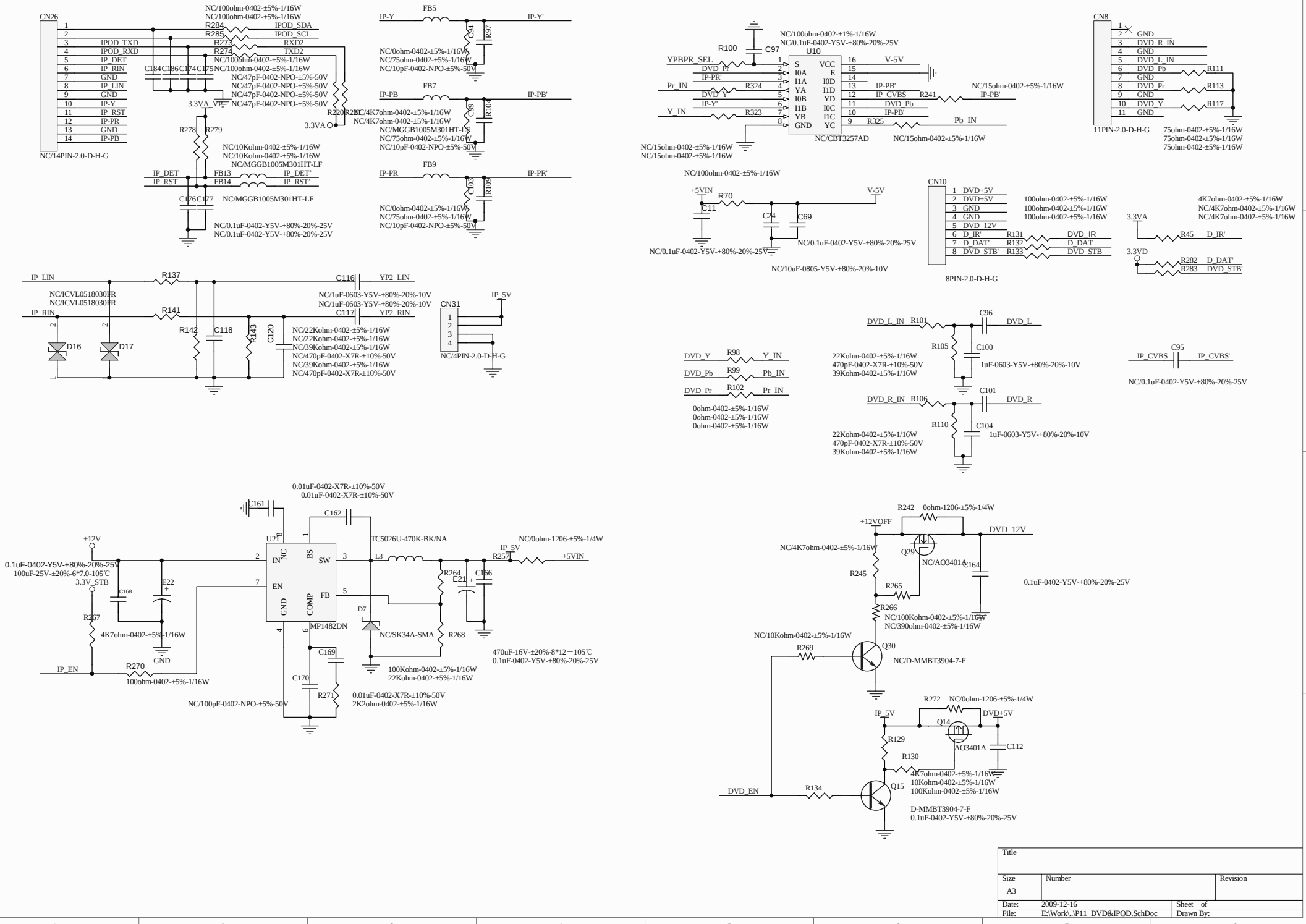
CN26
NC/14PIN-2.0-D-H-G
IPOD_TXD
IPOD_RXD
IP_DET
IP_RIN
IP_LIN
IP-Y
IP_RST
IP-PR
IP-PB
R284 IPOD_SDA
R285 IPOD_SCL
R273 RXD2
R274 TXD2
NC/100ohm-0402-±5%-1/16W
NC/47pF-0402-NPO-±5%-50V
C184 C186 C174 C175
3.3VA_VP
R220 R221
3.3VA
R278 R279
NC/10Kohm-0402-±5%-1/16W
NC/MGGB1005M301HT-LF
FB13 FB14
C176 C177
NC/0.1uF-0402-Y5V-+80%-20%-25V
FB5 FB7 FB9
C94 C99 C103
R97 R104 R109
NC/0ohm-0402-±5%-1/16W
NC/75ohm-0402-±5%-1/16W
NC/10pF-0402-NPO-±5%-50V
NC/4K7ohm-0402-±5%-1/16W
NC/MGGB1005M301HT-LS
R100 C97
U10
NC/CBT3257AD
YPBPR_SEL
DVD_Pr
IP-PR'
Pr_IN
R324
DVD_Y
IP-Y'
Y_IN
R323
S VCC
I0A E
I1A I0D
YA I1D
I0B YD
I1B I0C
YB I1C
GND YC
V-5V
IP-PB'
IP_CVBS
DVD_Pb
R241
R325
Pb_IN
NC/15ohm-0402-±5%-1/16W
NC/15ohm-0402-±1%-1/16W
NC/0.1uF-0402-Y5V-+80%-20%-25V
CN8
11PIN-2.0-D-H-G
GND
DVD_R_IN
DVD_L_IN
DVD_Pb
DVD_Pr
DVD_Y
R111 R113 R117
75ohm-0402-±5%-1/16W
CN10
8PIN-2.0-D-H-G
DVD+5V
GND
DVD_12V
D_IR'
D_DAT'
DVD_STB'
R131 R132 R133
DVD_IR
D_DAT
DVD_STB
100ohm-0402-±5%-1/16W
4K7ohm-0402-±5%-1/16W
NC/4K7ohm-0402-±5%-1/16W
3.3VA
3.3VD
R45 D_IR'
R282 D_DAT'
R283 DVD_STB'
+5VIN
R70
V-5V
C11 C24 C69
NC/10uF-0805-Y5V-+80%-20%-10V
IP_LIN
IP_RIN
R137 R141
C116 C117
YP2_LIN
YP2_RIN
NC/ICVL05180301R
NC/1uF-0603-Y5V-+80%-20%-10V
R142 C118 R143 C120
D16 D17
NC/22Kohm-0402-±5%-1/16W
NC/39Kohm-0402-±5%-1/16W
NC/470pF-0402-X7R-±10%-50V
CN31
NC/4PIN-2.0-D-H-G
IP_5V
DVD_Y R98 Y_IN
DVD_Pb R99 Pb_IN
DVD_Pr R102 Pr_IN
0ohm-0402-±5%-1/16W
DVD_L_IN R101 C96 DVD_L
R105 C100
22Kohm-0402-±5%-1/16W
470pF-0402-X7R-±10%-50V
39Kohm-0402-±5%-1/16W
1uF-0603-Y5V-+80%-20%-10V
DVD_R_IN R106 C101 DVD_R
R110 C104
IP_CVBS C95 IP_CVBS'
NC/0.1uF-0402-Y5V-+80%-20%-25V
0.01uF-0402-X7R-±10%-50V
C161 C162
U21
MP1482DN
TC5026U-470K-BK/NA
NC/0ohm-1206-±5%-1/4W
+12V
0.1uF-0402-Y5V-+80%-20%-25V
100uF-25V-±20%-6*7.0-105℃
3.3V_STB
C168 E22
R267
4K7ohm-0402-±5%-1/16W
GND
IP_EN
R270
100ohm-0402-±5%-1/16W
NC IN BS SW EN GND COMP FB
L3
R257
+5VIN
R264 E21 C166
D7
NC/SK34A-SMA
R268
100Kohm-0402-±5%-1/16W
22Kohm-0402-±5%-1/16W
470uF-16V-±20%-8*12－105℃
0.1uF-0402-Y5V-+80%-20%-25V
C169
C170
R271
0.01uF-0402-X7R-±10%-50V
2K2ohm-0402-±5%-1/16W
NC/100pF-0402-NPO-±5%-50V
R242 0ohm-1206-±5%-1/4W
+12VOFF
DVD_12V
NC/4K7ohm-0402-±5%-1/16W
Q29
NC/AO3401A
C164
0.1uF-0402-Y5V-+80%-20%-25V
R245
R265
R266
NC/100Kohm-0402-±5%-1/16W
NC/390ohm-0402-±5%-1/16W
NC/10Kohm-0402-±5%-1/16W
R269
Q30
NC/D-MMBT3904-7-F
R272 NC/0ohm-1206-±5%-1/4W
IP_5V
DVD+5V
Q14
AO3401A
C112
R129
R130
4K7ohm-0402-±5%-1/16W
10Kohm-0402-±5%-1/16W
100Kohm-0402-±5%-1/16W
DVD_EN
R134
Q15
D-MMBT3904-7-F
0.1uF-0402-Y5V-+80%-20%-25V
Title
Size
A3
Number
Revision
Date: 2009-12-16
Sheet of
File: E:\Work\..\P11_DVD&IPOD.SchDoc
Drawn By: