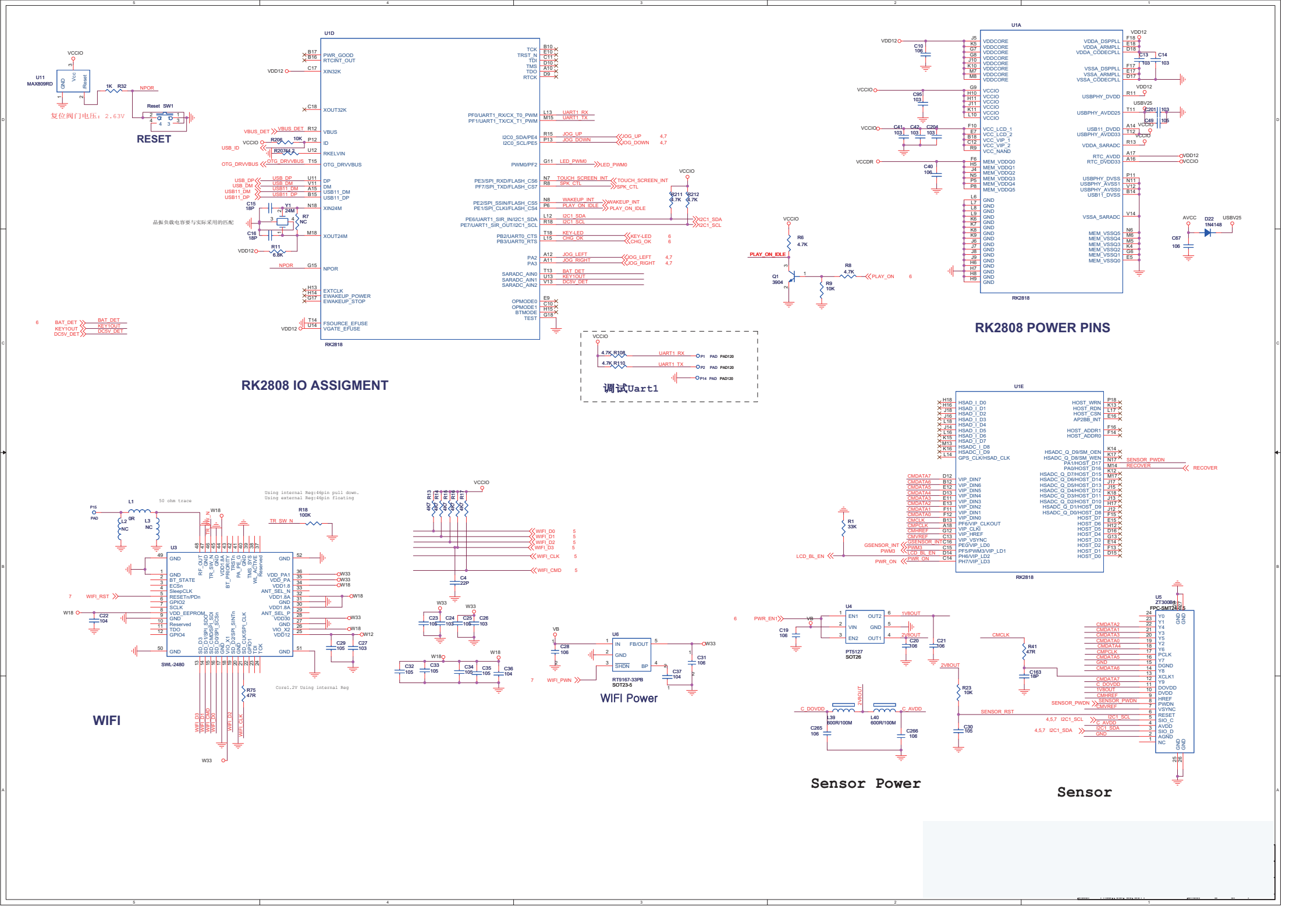
RESET
复位阀门电压：2.63V
RK2808 IO ASSIGMENT
RK2808 POWER PINS
调试Uart1
WIFI
WIFI Power
Sensor Power
Sensor

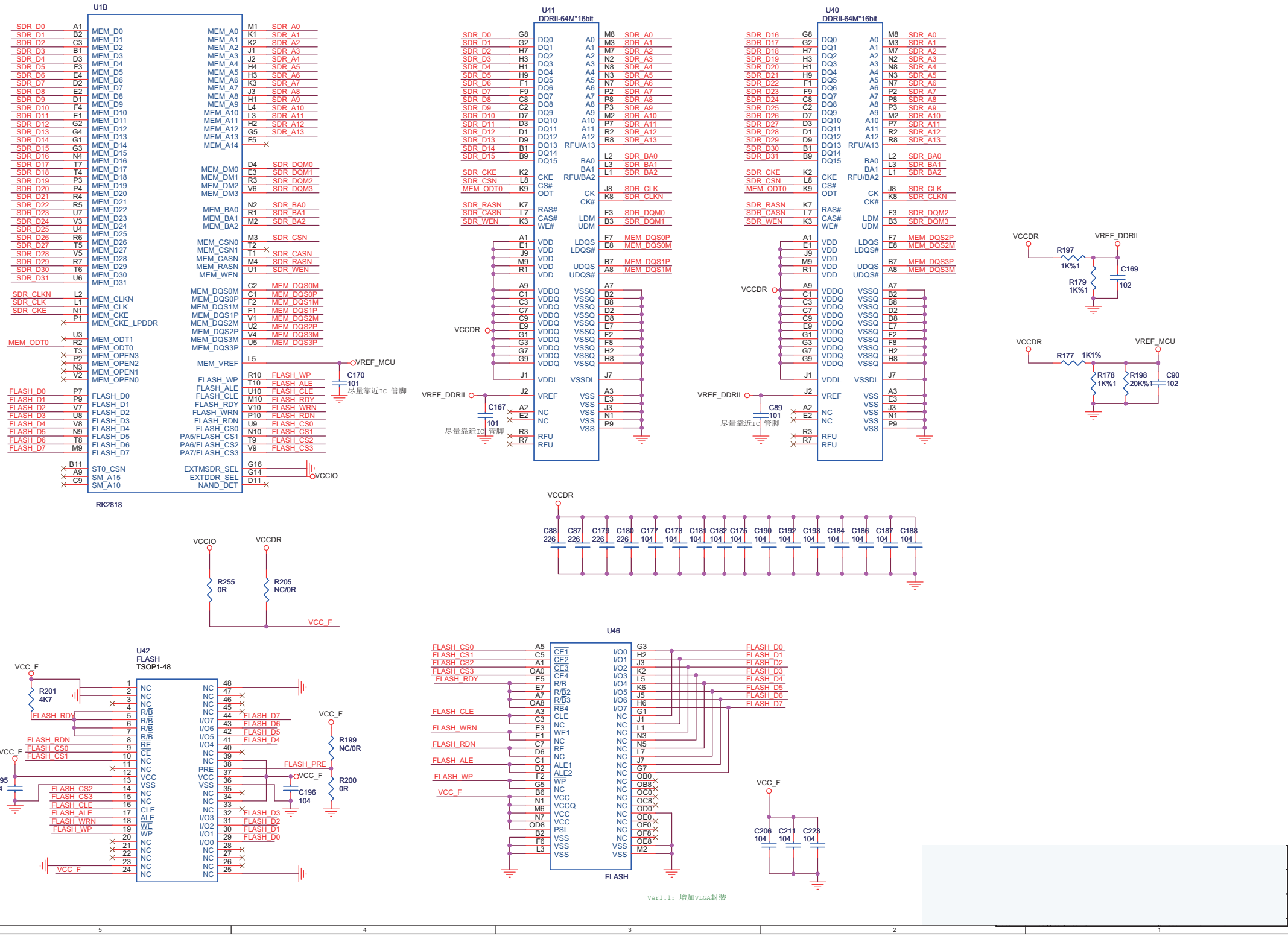
U1B
RK2818
U41
DDRII-64M*16bit
U40
DDRII-64M*16bit
U42
FLASH
TSOP1-48
U46
FLASH
VCCDR
VREF_DDRII
VREF_MCU
VCCIO
VCC_F
R255 0R
R205 NC/0R
R199 NC/0R
R200 0R
R201 4K7
R197 1K%1
R179 1K%1
C169 102
R177 1K1%
R178 1K%1
R198 20K%1
C90 102
C170 101
C167 101
C89 101
C88 226
C87 226
C179 226
C180 226
C177 104
C178 104
C181 104
C182 104
C175 104
C190 104
C192 104
C193 104
C184 104
C186 104
C187 104
C188 104
C195 104
C196 104
C206 104
C211 104
C223 104
尽量靠近IC 管脚
Ver1.1: 增加VLGA封装

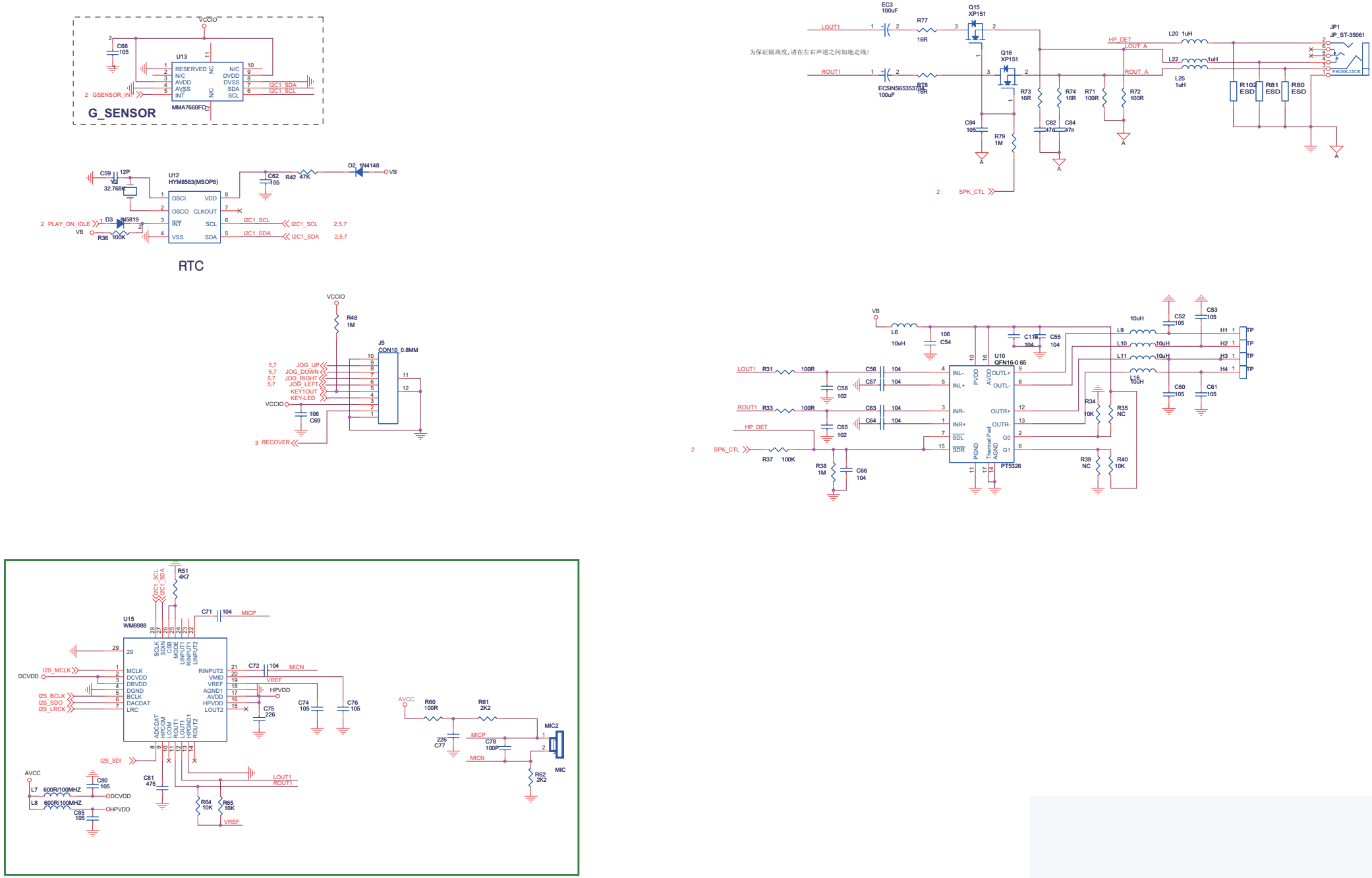
G_SENSOR
U13
MMA7660FC
RTC
U12
HYM8563(MSOP8)
U15
WM8988
U10
QFN16-0.65
PT5326
J5
CON10 0.8MM
JP1
JP_ST-35061
PHONEJACK
为保证隔离度，请在左右声道之间加地走线！
VCCIO
VB
AVCC
MIC
MIC2
MICP
MICN
VREF
HPVDD
DCVDD
I2S_MCLK
I2S_BCLK
I2S_SDO
I2S_LRCK
I2S_SDI
I2C1_SCL
I2C1_SDA
GSENSOR_INT
PLAY_ON_IDLE
RECOVER
JOG_UP
JOG_DOWN
JOG_RIGHT
JOG_LEFT
KEY1OUT
KEY-LED
LOUT1
ROUT1
HP_DET
SPK_CTL
LOUT_A
ROUT_A

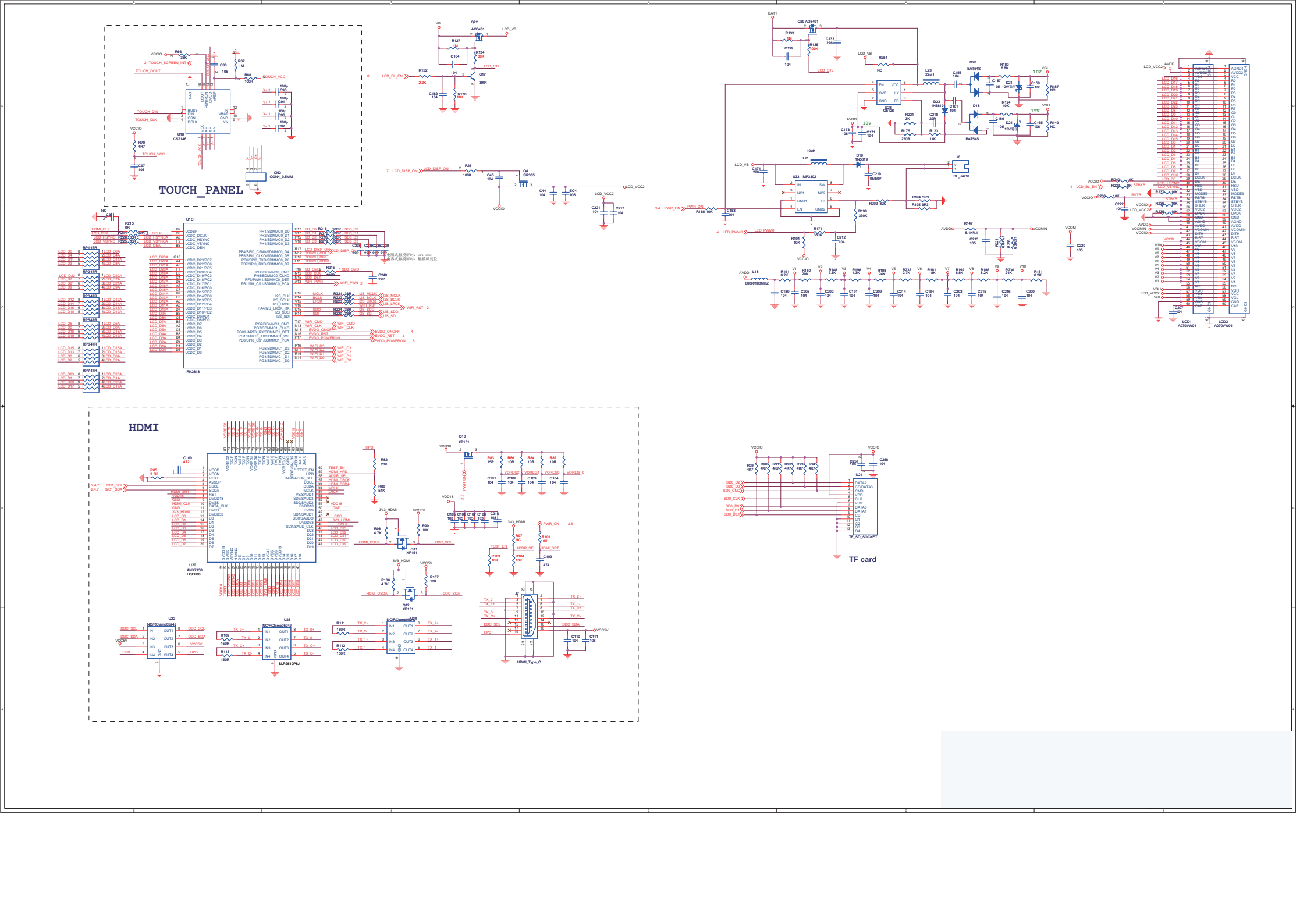
TOUCH_PANEL
HDMI
TF card

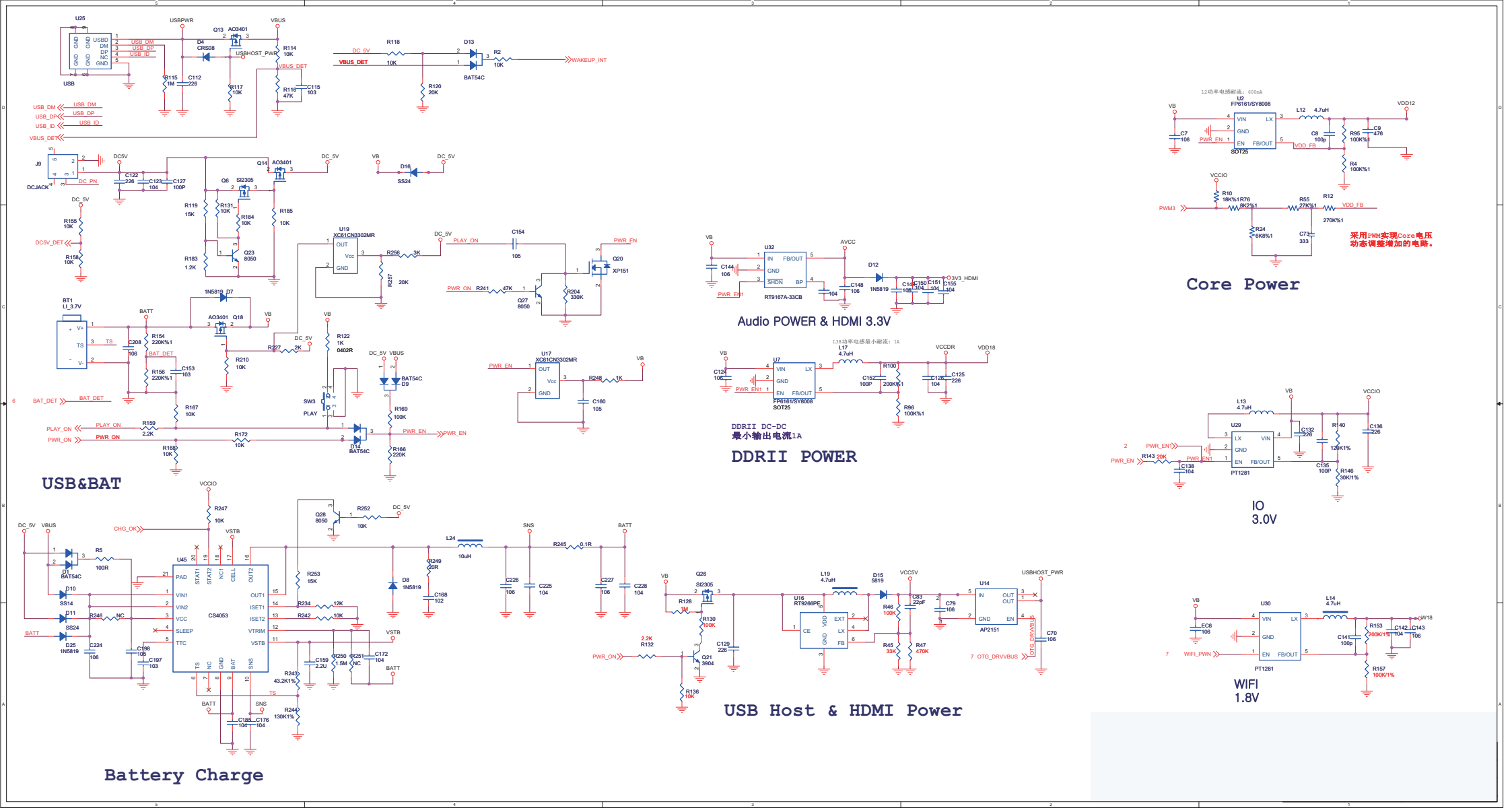
USB&BAT
Battery Charge
Audio POWER & HDMI 3.3V
DDRII POWER
DDRII DC-DC
最小输出电流1A
USB Host & HDMI Power
Core Power
采用PWM实现Core电压
动态调整增加的电路。
IO
3.0V
WIFI
1.8V

Version	Date	Author	Change Note	Approved
V1.0	2010.09.06	Kim	First edition	

GPIO

GPIO	FUNCTION	GPIO	FUNCTION	GPIO	FUNCTION	GPIO	FUNCTION
PA0	RECOVER	PB7	TOUCH_DOUT	PF3	SD0_DET	PG0	EVDO_ONOFF
PA1	SENSOR_PWDN	PE0	GSENSOR_INT	PF4	NAND_DETECT	PG1	EVDO_RST
PA2	JOG_LEFT	PE1	PLAY_ON_IDLE	PF5	PWM3(VDD ajust)	PG2	WIFI_CMD
PA3	JOG_RIGHT	PE2	WAKEUP_INT	PF7	SPK_CTL	PG3	WIFI_D0
PA4	WIFI_RST	PE3	TOUCH_SCREEN_INT	PH0	SD0_CMD	PG4	WIFI_D1
PB0	EVDO_POWERON	PE4	JOG_UP	PH1	SD_D0	PG5	WIFI_D2
PB1	WIFI_PWN	PE5	JOG_DOWN	PH2	SD_D1	PG6	WIFI_D3
PB2	KEY-LED	PE6	I2C1_SDA	PH3	SD_D2	PG7	WIFI_CLK
PB3	CHG_OK	PE7	I2C1_SCL	PH4	SD_D3	AIN0	BAT_DET
PB4	LCD_DISP_ON	PF0	UART1_RX	PH5	SD0_CLK	AIN1	AD KEY
PB5	TOUCH_CLK	PF1	UART1_TX	PH6	LCD_BL_EN	AIN2	DC5V_DET
PB6	TOUCH_DIN	PF2	LED_PWM0	PH7	PWR_ON		

I2C1
设备:
1:Sensor
2:G_SENSOR MMA7660FC
3:RTC HYM8563 Address: read 0XA3H write 0XA2H
4:CODEC WM8988 Address:0X34H
5:HDMI ANX7150

备注：1.红色字体的IO，不能更改！！！
2.RK2818的PA口和PE口可以做中断输入口！