Schematic Diagram

Page Index

01. Index Page
02. CPU-1
03. CPU-2
04. GMCH-1
05. GMCH-2
06. GMCH-3
07. GMCH-4
08. GMCH-5
09. SO-DIMM
10. ICH7M-1
11. ICH7M-2
12. ICH7M-3
13. ICH7M-4
14. ICH7M-5
15. CLOCK GEN
16. VGA
17. LVDS
18. SSD
19. MINI PCIE
20. LAN
21. AUDIO
22. MODEM
23. USB
24. CARD READER
25. EC-1
26. EC-2
27. DC RAIL
28. SYSTEM CHARGE
29. SYSTEM VR
30. CHIP VR
31. DDR VR
32. CPU VR
33. OTHER VR
34. MODIFY HISTORY
.

Title <Title>		
Size C	Document Number <Doc>	Rev <RevCode>
Date: Wednesday, February 18, 2009	Sheet 1 of 40	

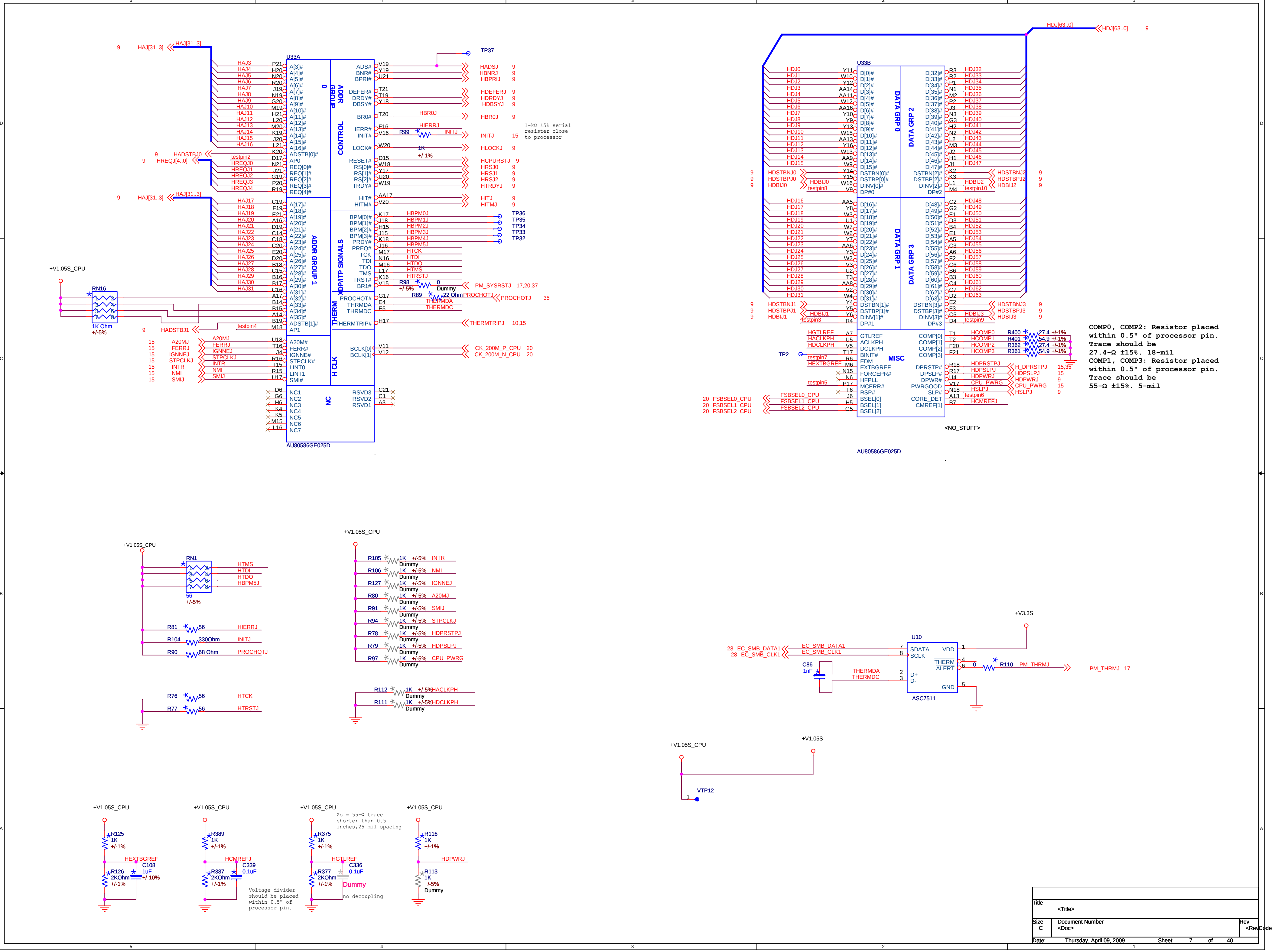
U33A
U33B
AU80586GE025D
ADDR GROUP 0
CONTROL
ADDR GROUP 1
XDP/ITP SIGNALS
THERM
H CLK
NC
DATA GRP 0
DATA GRP 1
DATA GRP 2
DATA GRP 3
MISC
HAJ[31..3]
HREQJ[4..0]
HADSTBJ0
HADSTBJ1
HDJ[63..0]
TP37
TP36
TP35
TP34
TP33
TP32
TP2
VTP12
HADSJ
HBNRJ
HBPRIJ
HDEFERJ
HDRDYJ
HDBSYJ
HBR0J
HIERRJ
INITJ
HLOCKJ
HCPURSTJ
HRSJ0
HRSJ1
HRSJ2
HTRDYJ
HITJ
HITMJ
PM_SYSRSTJ
PROCHOTJ
THERMDA
THERMDC
THERMTRIPJ
CK_200M_P_CPU
CK_200M_N_CPU
A20MJ
FERRJ
IGNNEJ
STPCLKJ
INTR
NMI
SMIJ
R98
R89
R99
RN16
1K Ohm
+/-5%
+V1.05S_CPU
FSBSEL0_CPU
FSBSEL1_CPU
FSBSEL2_CPU
HCOMP0
HCOMP1
HCOMP2
HCOMP3
R400
R401
R362
R361
27.4 +/-1%
54.9 +/-1%
HDPRSTPJ
HDPSLPJ
HDPWRJ
CPU_PWRG
HSLPJ
HCMREFJ
H_DPRSTPJ
<NO_STUFF>
RN1
HTMS
HTDI
HTDO
HBPM5J
R81
R104
R90
R76
R77
R105
R106
R127
R80
R91
R94
R78
R79
R97
R112
R111
HACLKPH
HDCLKPH
U10
ASC7511
SDATA
SCLK
VDD
THERM
ALERT
D+
D-
GND
EC_SMB_DATA1
EC_SMB_CLK1
C86
1nF
R110
PM_THRMJ
+V3.3S
+V1.05S
R125
R126
C108
R389
R387
C339
R375
R377
C336
R116
R113
HEXTBGREF
HCMREFJ
HGTLREF
Dummy

1-kΩ ±5% serial resistor close to processor

COMP0, COMP2: Resistor placed within 0.5" of processor pin. Trace should be 27.4-Ω ±15%. 18-mil
COMP1, COMP3: Resistor placed within 0.5" of processor pin. Trace should be 55-Ω ±15%. 5-mil

Zo = 55-Ω trace shorter than 0.5 inches,25 mil spacing

Voltage divider should be placed within 0.5" of processor pin.

no decoupling

Title
<Title>

Size C
Document Number <Doc>
Rev <RevCode>

Date: Thursday, April 09, 2009
Sheet 7 of 40

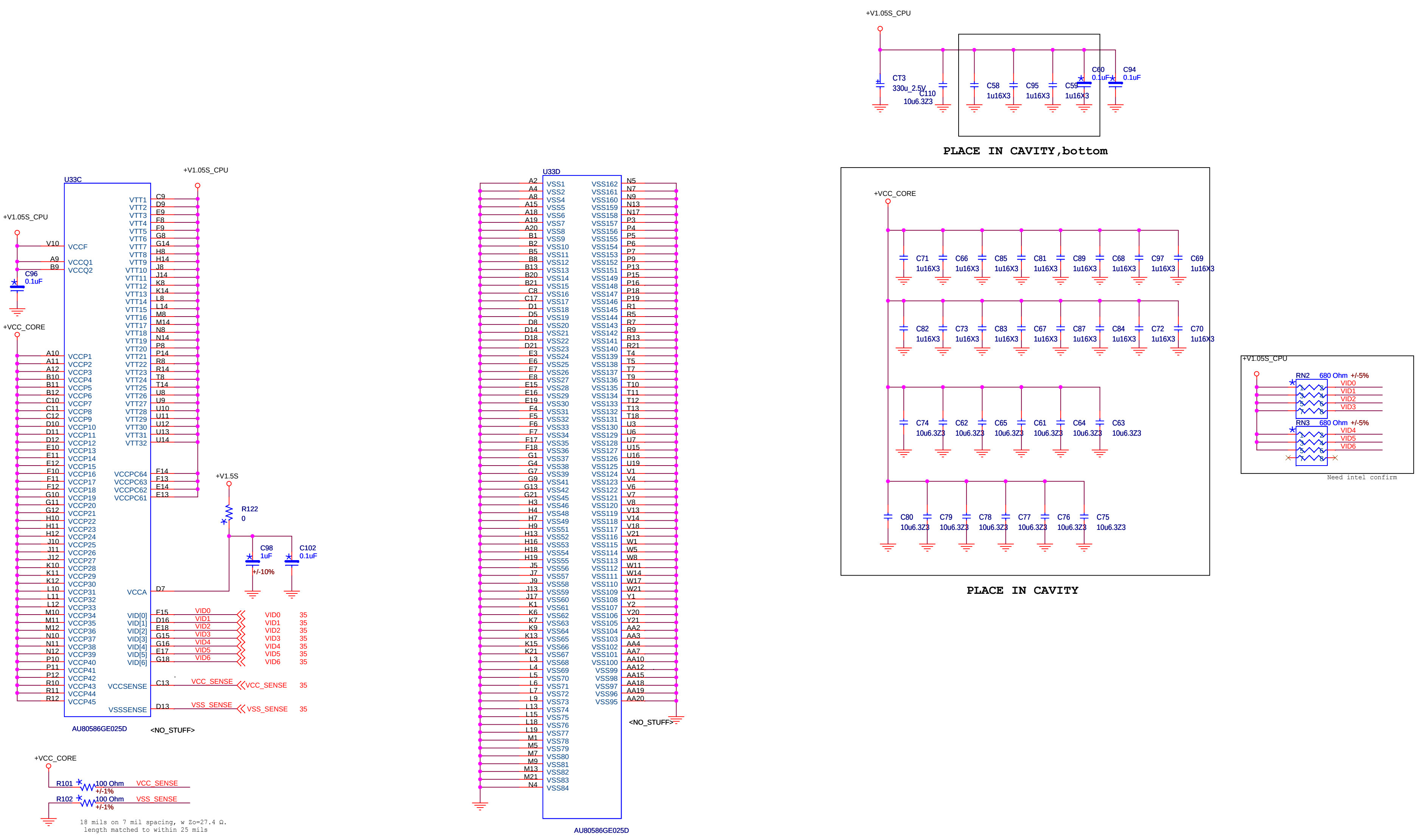
+V1.05S_CPU
U33C
VTT1 C9
VTT2 D9
VTT3 E9
VTT4 F8
VTT5 F9
VTT6 G8
VTT7 G14
VTT8 H8
VTT9 H14
VTT10 J8
VTT11 J14
VTT12 K8
VTT13 K14
VTT14 L8
VTT15 L14
VTT16 M8
VTT17 M14
VTT18 N8
VTT19 N14
VTT20 P8
VTT21 P14
VTT22 R8
VTT23 R14
VTT24 T8
VTT25 T14
VTT26 U8
VTT27 U9
VTT28 U10
VTT29 U11
VTT30 U12
VTT31 U13
VTT32 U14
VCCPC64 F14
VCCPC63 F13
VCCPC62 E14
VCCPC61 E13
+V1.05S_CPU
V10 VCCF
A9 VCCQ1
B9 VCCQ2
C96
0.1uF
+VCC_CORE
A10 VCCP1
A11 VCCP2
A12 VCCP3
B10 VCCP4
B11 VCCP5
B12 VCCP6
C10 VCCP7
C11 VCCP8
C12 VCCP9
D10 VCCP10
D11 VCCP11
D12 VCCP12
E10 VCCP13
E11 VCCP14
E12 VCCP15
F10 VCCP16
F11 VCCP17
F12 VCCP18
G10 VCCP19
G11 VCCP20
G12 VCCP21
H10 VCCP22
H11 VCCP23
H12 VCCP24
J10 VCCP25
J11 VCCP26
J12 VCCP27
K10 VCCP28
K11 VCCP29
K12 VCCP30
L10 VCCP31
L11 VCCP32
L12 VCCP33
M10 VCCP34
M11 VCCP35
M12 VCCP36
N10 VCCP37
N11 VCCP38
N12 VCCP39
P10 VCCP40
P11 VCCP41
P12 VCCP42
R10 VCCP43
R11 VCCP44
R12 VCCP45
+V1.5S
R122
0
C98
1uF
+/-10%
C102
0.1uF
VCCA D7
VID[0] F15 VID0 VID0 35
VID[1] D16 VID1 VID1 35
VID[2] E18 VID2 VID2 35
VID[3] G15 VID3 VID3 35
VID[4] G16 VID4 VID4 35
VID[5] E17 VID5 VID5 35
VID[6] G18 VID6 VID6 35
VCCSENSE C13 VCC_SENSE VCC_SENSE 35
VSSSENSE D13 VSS_SENSE VSS_SENSE 35
AU80586GE025D
<NO_STUFF>
+VCC_CORE
R101 100 Ohm +/-1% VCC_SENSE
R102 100 Ohm +/-1% VSS_SENSE
18 mils on 7 mil spacing, w Zo=27.4 Ω.
length matched to within 25 mils
U33D
A2 VSS1
A4 VSS2
A8 VSS4
A15 VSS5
A18 VSS6
A19 VSS7
A20 VSS8
B1 VSS9
B2 VSS10
B5 VSS11
B8 VSS12
B13 VSS13
B20 VSS14
B21 VSS15
C8 VSS16
C17 VSS17
D1 VSS18
D5 VSS19
D8 VSS20
D14 VSS21
D18 VSS22
D21 VSS23
E3 VSS24
E6 VSS25
E7 VSS26
E8 VSS27
E15 VSS28
E16 VSS29
E19 VSS30
F4 VSS31
F5 VSS32
F6 VSS33
F7 VSS34
F17 VSS35
F18 VSS36
G1 VSS37
G4 VSS38
G7 VSS39
G9 VSS41
G13 VSS42
G21 VSS45
H3 VSS46
H4 VSS48
H7 VSS49
H9 VSS51
H13 VSS52
H16 VSS53
H18 VSS54
H19 VSS55
J5 VSS56
J7 VSS57
J9 VSS58
J13 VSS59
J17 VSS60
K1 VSS61
K6 VSS62
K7 VSS63
K9 VSS64
K13 VSS65
K15 VSS66
K21 VSS67
L3 VSS68
L4 VSS69
L5 VSS70
L6 VSS71
L7 VSS72
L9 VSS73
L13 VSS74
L15 VSS75
L18 VSS76
L19 VSS77
M1 VSS78
M5 VSS79
M7 VSS80
M9 VSS81
M13 VSS82
M21 VSS83
N4 VSS84
VSS162 N5
VSS161 N7
VSS160 N9
VSS159 N13
VSS158 N17
VSS157 P3
VSS156 P4
VSS155 P5
VSS154 P6
VSS153 P7
VSS152 P9
VSS151 P13
VSS149 P15
VSS148 P16
VSS147 P18
VSS146 P19
VSS145 R1
VSS144 R5
VSS143 R7
VSS142 R9
VSS141 R13
VSS140 R21
VSS139 T4
VSS138 T5
VSS137 T7
VSS136 T9
VSS135 T10
VSS134 T11
VSS133 T12
VSS132 T13
VSS131 T18
VSS130 U3
VSS129 U6
VSS128 U7
VSS127 U15
VSS126 U16
VSS125 U19
VSS124 V1
VSS123 V4
VSS122 V6
VSS121 V7
VSS120 V8
VSS119 V13
VSS118 V14
VSS117 V18
VSS116 V21
VSS115 W1
VSS114 W5
VSS113 W8
VSS112 W11
VSS111 W14
VSS110 W17
VSS109 W21
VSS108 Y1
VSS107 Y2
VSS106 Y20
VSS105 Y21
VSS104 AA2
VSS103 AA3
VSS102 AA4
VSS101 AA7
VSS100 AA10
VSS99 AA12
VSS98 AA15
VSS97 AA18
VSS96 AA19
VSS95 AA20
<NO_STUFF>
AU80586GE025D
+V1.05S_CPU
CT3 330u_2.5V
C110 10u6.3Z3
C58 1u16X3
C95 1u16X3
C59 1u16X3
C60 0.1uF
C94 0.1uF
PLACE IN CAVITY,bottom
+VCC_CORE
C71 1u16X3
C66 1u16X3
C85 1u16X3
C81 1u16X3
C89 1u16X3
C68 1u16X3
C97 1u16X3
C69 1u16X3
C82 1u16X3
C73 1u16X3
C83 1u16X3
C67 1u16X3
C87 1u16X3
C84 1u16X3
C72 1u16X3
C70 1u16X3
C74 10u6.3Z3
C62 10u6.3Z3
C65 10u6.3Z3
C61 10u6.3Z3
C64 10u6.3Z3
C63 10u6.3Z3
C80 10u6.3Z3
C79 10u6.3Z3
C78 10u6.3Z3
C77 10u6.3Z3
C76 10u6.3Z3
C75 10u6.3Z3
PLACE IN CAVITY
+V1.05S_CPU
RN2 680 Ohm +/-5%
1 2 VID0
3 4 VID1
5 6 VID2
7 8 VID3
RN3 680 Ohm +/-5%
1 2 VID4
3 4 VID5
5 6 VID6
7 8
Need intel confirm

Title
<Title>

Size C
Document Number
<Doc>
Rev
<RevCode>

Date: Saturday, March 28, 2009 Sheet 8 of 40

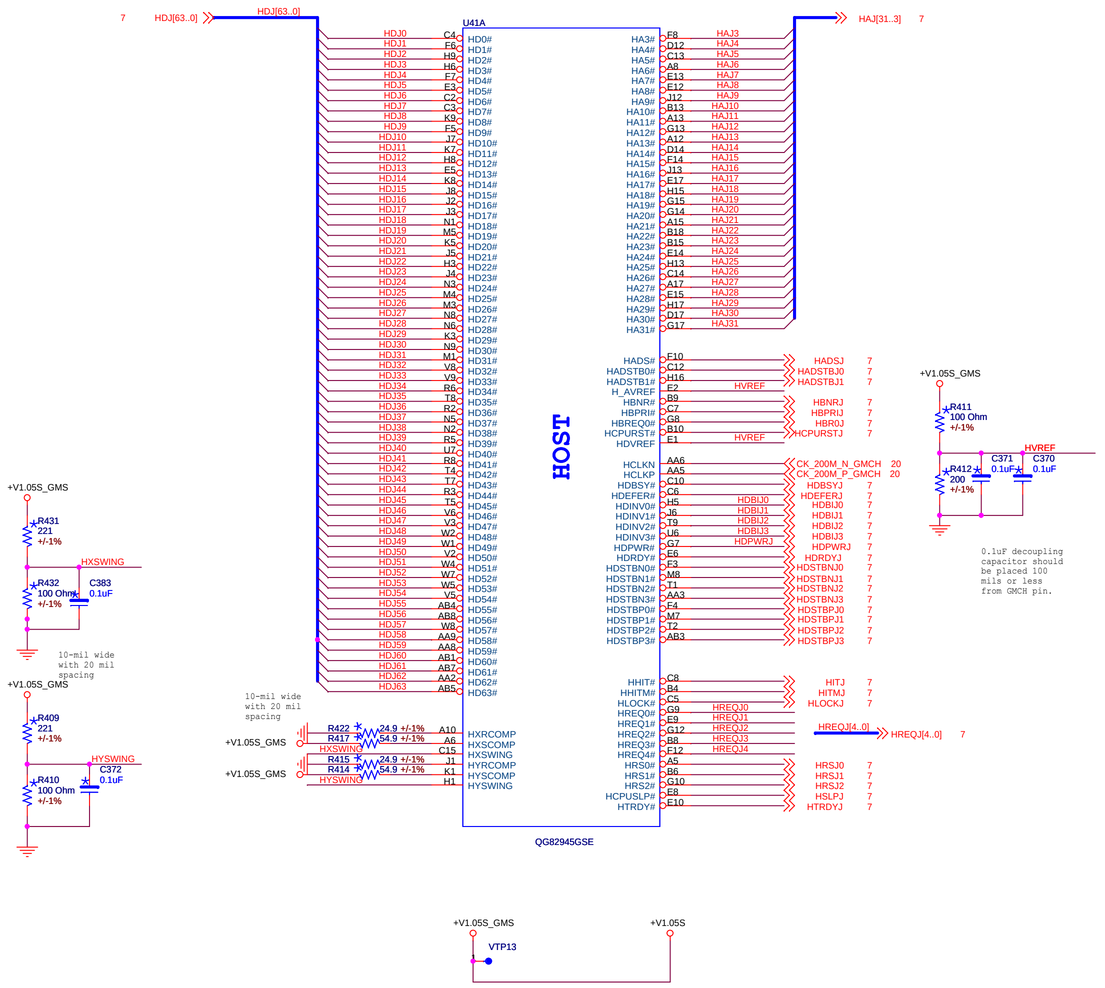

HOST
U41A
QG82945GSE
7 HDJ[63..0]
HDJ[63..0]
HAJ[31..3] 7
HDJ0 C4 HD0#
HDJ1 F6 HD1#
HDJ2 H9 HD2#
HDJ3 H6 HD3#
HDJ4 F7 HD4#
HDJ5 E3 HD5#
HDJ6 C2 HD6#
HDJ7 C3 HD7#
HDJ8 K9 HD8#
HDJ9 F5 HD9#
HDJ10 J7 HD10#
HDJ11 K7 HD11#
HDJ12 H8 HD12#
HDJ13 E5 HD13#
HDJ14 K8 HD14#
HDJ15 J8 HD15#
HDJ16 J2 HD16#
HDJ17 J3 HD17#
HDJ18 N1 HD18#
HDJ19 M5 HD19#
HDJ20 K5 HD20#
HDJ21 J5 HD21#
HDJ22 H3 HD22#
HDJ23 J4 HD23#
HDJ24 N3 HD24#
HDJ25 M4 HD25#
HDJ26 M3 HD26#
HDJ27 N8 HD27#
HDJ28 N6 HD28#
HDJ29 K3 HD29#
HDJ30 N9 HD30#
HDJ31 M1 HD31#
HDJ32 V8 HD32#
HDJ33 V9 HD33#
HDJ34 R6 HD34#
HDJ35 T8 HD35#
HDJ36 R2 HD36#
HDJ37 N5 HD37#
HDJ38 N2 HD38#
HDJ39 R5 HD39#
HDJ40 U7 HD40#
HDJ41 R8 HD41#
HDJ42 T4 HD42#
HDJ43 T7 HD43#
HDJ44 R3 HD44#
HDJ45 T5 HD45#
HDJ46 V6 HD46#
HDJ47 V3 HD47#
HDJ48 W2 HD48#
HDJ49 W1 HD49#
HDJ50 V2 HD50#
HDJ51 W4 HD51#
HDJ52 W7 HD52#
HDJ53 W5 HD53#
HDJ54 V5 HD54#
HDJ55 AB4 HD55#
HDJ56 AB8 HD56#
HDJ57 W8 HD57#
HDJ58 AA9 HD58#
HDJ59 AA8 HD59#
HDJ60 AB1 HD60#
HDJ61 AB7 HD61#
HDJ62 AA2 HD62#
HDJ63 AB5 HD63#
HA3# F8 HAJ3
HA4# D12 HAJ4
HA5# C13 HAJ5
HA6# A8 HAJ6
HA7# E13 HAJ7
HA8# E12 HAJ8
HA9# J12 HAJ9
HA10# B13 HAJ10
HA11# A13 HAJ11
HA12# G13 HAJ12
HA13# A12 HAJ13
HA14# D14 HAJ14
HA15# F14 HAJ15
HA16# J13 HAJ16
HA17# E17 HAJ17
HA18# H15 HAJ18
HA19# G15 HAJ19
HA20# G14 HAJ20
HA21# A15 HAJ21
HA22# B18 HAJ22
HA23# B15 HAJ23
HA24# F14 HAJ24
HA25# H13 HAJ25
HA26# C14 HAJ26
HA27# A17 HAJ27
HA28# E15 HAJ28
HA29# H17 HAJ29
HA30# D17 HAJ30
HA31# G17 HAJ31
HADS# F10 HADSJ 7
HADSTB0# C12 HADSTBJ0 7
HADSTB1# H16 HADSTBJ1 7
H_AVREF E2 HVREF
HBNR# B9 HBNRJ 7
HBPRI# C7 HBPRIJ 7
HBREQ0# G8 HBR0J 7
HCPURST# B10 HCPURSTJ 7
HDVREF E1 HVREF
HCLKN AA6 CK_200M_N_GMCH 20
HCLKP AA5 CK_200M_P_GMCH 20
HDBSY# C10 HDBSYJ 7
HDEFER# C6 HDEFERJ 7
HDINV0# H5 HDBIJ0 HDBIJ0 7
HDINV1# J6 HDBIJ1 HDBIJ1 7
HDINV2# T9 HDBIJ2 HDBIJ2 7
HDINV3# U6 HDBIJ3 HDBIJ3 7
HDPWR# G7 HDPWRJ HDPWRJ 7
HDRDY# E6 HDRDYJ 7
HDSTBN0# F3 HDSTBNJ0 7
HDSTBN1# M8 HDSTBNJ1 7
HDSTBN2# T1 HDSTBNJ2 7
HDSTBN3# AA3 HDSTBNJ3 7
HDSTBP0# F4 HDSTBPJ0 7
HDSTBP1# M7 HDSTBPJ1 7
HDSTBP2# T2 HDSTBPJ2 7
HDSTBP3# AB3 HDSTBPJ3 7
HHIT# C8 HITJ 7
HHITM# B4 HITMJ 7
HLOCK# C5 HLOCKJ 7
HREQ0# G9 HREQJ0
HREQ1# F9 HREQJ1
HREQ2# G12 HREQJ2
HREQ3# B8 HREQJ3
HREQ4# F12 HREQJ4
HREQJ[4..0]
HREQJ[4..0] 7
HRS0# A5 HRSJ0 7
HRS1# B6 HRSJ1 7
HRS2# G10 HRSJ2 7
HCPUSLP# F8 HSLPJ 7
HTRDY# E10 HTRDYJ 7
HXRCOMP A10
HXSCOMP A6
HXSWING C15
HYRCOMP J1
HYSCOMP K1
HYSWING H1
+V1.05S_GMS
R422 24.9 +/-1%
R417 54.9 +/-1%
HXSWING
+V1.05S_GMS
R415 24.9 +/-1%
R414 54.9 +/-1%
HYSWING
+V1.05S_GMS
R411 100 Ohm +/-1%
HVREF
C371 0.1uF
C370 0.1uF
R412 200 +/-1%
+V1.05S_GMS
R431 221 +/-1%
HXSWING
R432 100 Ohm +/-1%
C383 0.1uF
+V1.05S_GMS
R409 221 +/-1%
HYSWING
R410 100 Ohm +/-1%
C372 0.1uF
+V1.05S_GMS
+V1.05S
VTP13

10-mil wide with 20 mil spacing

10-mil wide with 20 mil spacing

0.1uF decoupling capacitor should be placed 100 mils or less from GMCH pin.

Title <Title>		
Size C	Document Number <Doc>	Rev <RevCode>
Date: Saturday, March 28, 2009	Sheet 9 of 40	

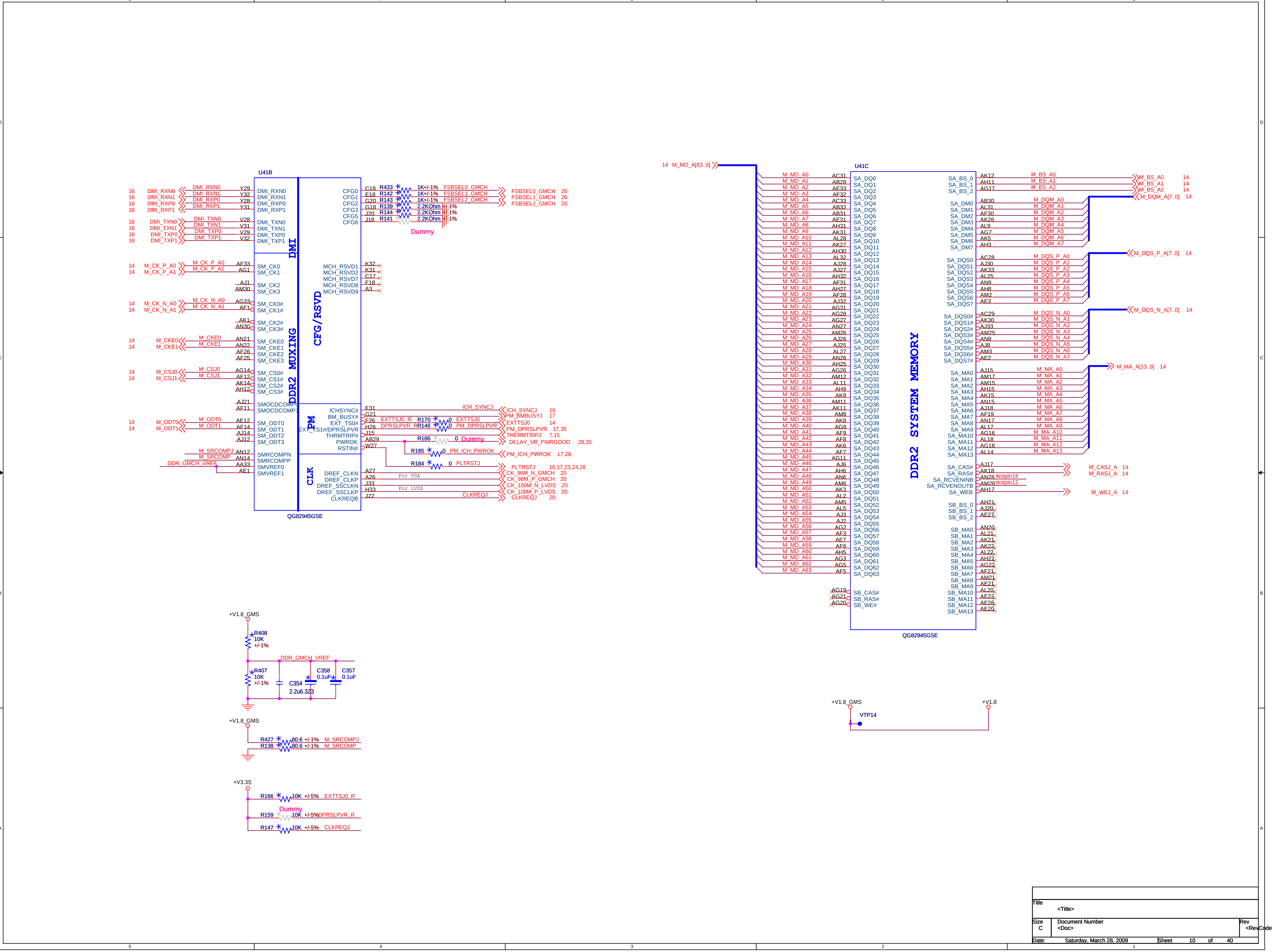
U41B
DMI
DDR2 MUXING
CFG/RSVD
PM
CLK
QG82945GSE
16 DMI_RXN0
16 DMI_RXN1
16 DMI_RXP0
16 DMI_RXP1
16 DMI_TXN0
16 DMI_TXN1
16 DMI_TXP0
16 DMI_TXP1
14 M_CK_P_A0
14 M_CK_P_A1
14 M_CK_N_A0
14 M_CK_N_A1
14 M_CKE0
14 M_CKE1
14 M_CSJ0
14 M_CSJ1
14 M_ODT0
14 M_ODT1
M_SRCOMPJ
M_SRCOMP
DDR_GMCH_VREF
SM_CK0
SM_CK1
SM_CK2
SM_CK3
SM_CK0#
SM_CK1#
SM_CK2#
SM_CK3#
SM_CKE0
SM_CKE1
SM_CKE2
SM_CKE3
SM_CS0#
SM_CS1#
SM_CS2#
SM_CS3#
SMOCDCOMP0
SMOCDCOMP1
SM_ODT0
SM_ODT1
SM_ODT2
SM_ODT3
SMRCOMPN
SMRCOMPP
SMVREF0
SMVREF1
CFG0
CFG1
CFG2
CFG3
CFG5
CFG6
MCH_RSVD1
MCH_RSVD2
MCH_RSVD7
MCH_RSVD8
MCH_RSVD9
ICHSYNC#
BM_BUSY#
EXT_TS0#
EXT_TS1#/DPRSLPVR
THRMTRIP#
PWROK
RSTIN#
DREF_CLKN
DREF_CLKP
DREF_SSCLKN
DREF_SSCLKP
CLKREQB
R433 1K+/-1% FSBSEL0_GMCH
R142 1K+/-1% FSBSEL1_GMCH
R143 1K+/-1% FSBSEL2_GMCH
R139 2.2KOhm +/-1%
R144 2.2KOhm +/-1%
R141 2.2KOhm +/-1%
Dummy
FSBSEL0_GMCH 20
FSBSEL1_GMCH 20
FSBSEL2_GMCH 20
ICH_SYNCJ
ICH_SYNCJ 16
PM_BMBUSYJ 17
EXTTSJ0_R
R170 0 EXTTSJ0
EXTTSJ0 14
DPRSLPVR_R
R146 0 PM_DPRSLPVR
PM_DPRSLPVR 17,35
THERMTRIPJ 7,15
R186 0 Dummy
DELAY_VR_PWRGOOD 28,35
R185 0 PM_ICH_PWROK
PM_ICH_PWROK 17,28
R184 0 PLTRSTJ
PLTRSTJ 16,17,23,24,28
CK_96M_N_GMCH 20
CK_96M_P_GMCH 20
CK_100M_N_LVDS 20
CK_100M_P_LVDS 20
CLKREQJ 20
For VGA
For LVDS
+V1.8_GMS
R408 10K +/-1%
R407 10K +/-1%
DDR_GMCH_VREF
C358 0.1uF
C357 0.1uF
C354 2.2u6.3Z3
+V1.8_GMS
R427 80.6 +/-1% M_SRCOMPJ
R138 80.6 +/-1% M_SRCOMP
+V3.3S
R166 10K +/-5% EXTTSJ0_R
R159 Dummy 10K +/-5% DPRSLPVR_R
R147 10K +/-5% CLKREQJ
14 M_MD_A[63..0]
U41C
DDR2 SYSTEM MEMORY
QG82945GSE
M_MD_A0 … M_MD_A63
SA_DQ0 … SA_DQ63
SA_BS_0
SA_BS_1
SA_BS_2
SA_DM0 … SA_DM7
SA_DQS0 … SA_DQS7
SA_DQS0# … SA_DQS7#
SA_MA0 … SA_MA13
SA_CAS#
SA_RAS#
SA_RCVENINB
SA_RCVENOUTB
SA_WEB
SB_BS_0
SB_BS_1
SB_BS_2
SB_MA0 … SB_MA13
SB_CAS#
SB_RAS#
SB_WE#
M_BS_A0 14
M_BS_A1 14
M_BS_A2 14
M_DQM_A[7..0] 14
M_DQM_A0 … M_DQM_A7
M_DQS_P_A[7..0] 14
M_DQS_P_A0 … M_DQS_P_A7
M_DQS_N_A[7..0] 14
M_DQS_N_A0 … M_DQS_N_A7
M_MA_A[13..0] 14
M_MA_A0 … M_MA_A13
M_CASJ_A 14
M_RASJ_A 14
testpin14
testpin12
M_WEJ_A 14
+V1.8_GMS
+V1.8
VTP14

Title
<Title>
Size C
Document Number
<Doc>
Rev
<RevCode>
Date: Saturday, March 28, 2009
Sheet 10 of 40

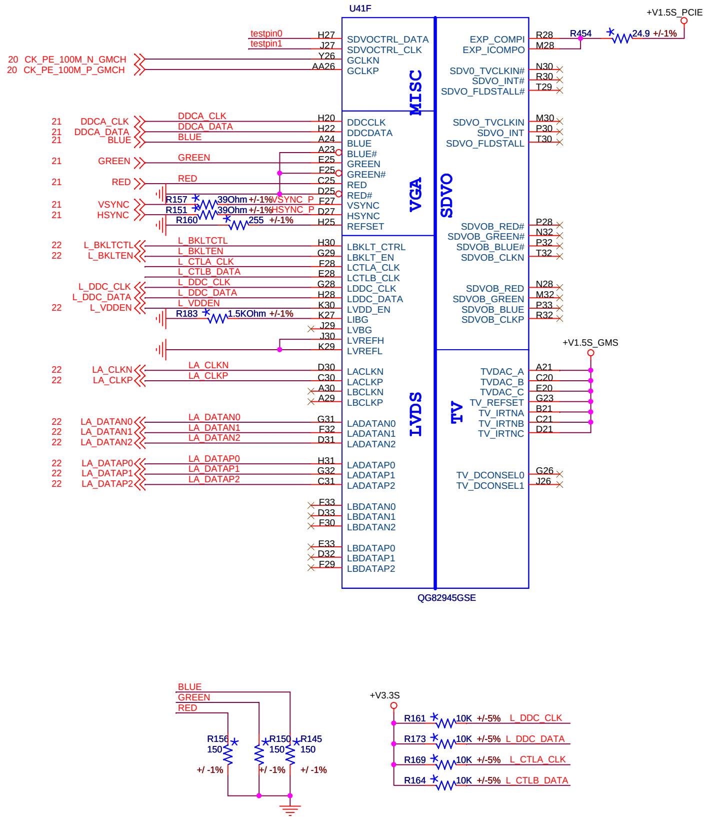
U41F
QG82945GSE
MISC
VGA
LVDS
SDVO
TV
testpin0 H27 SDVOCTRL_DATA
testpin1 J27 SDVOCTRL_CLK
20 CK_PE_100M_N_GMCH Y26 GCLKN
20 CK_PE_100M_P_GMCH AA26 GCLKP
21 DDCA_CLK H20 DDCCLK
21 DDCA_DATA H22 DDCDATA
21 BLUE A24 BLUE
A23 BLUE#
21 GREEN E25 GREEN
F25 GREEN#
21 RED C25 RED
D25 RED#
21 VSYNC R157 39Ohm +/-1% VSYNC_P F27 VSYNC
21 HSYNC R151 39Ohm +/-1% HSYNC_P D27 HSYNC
R160 255 +/-1% H25 REFSET
22 L_BKLTCTL H30 LBKLT_CTRL
22 L_BKLTEN G29 LBKLT_EN
L_CTLA_CLK F28 LCTLA_CLK
L_CTLB_DATA E28 LCTLB_CLK
L_DDC_CLK G28 LDDC_CLK
L_DDC_DATA H28 LDDC_DATA
22 L_VDDEN K30 LVDD_EN
R183 1.5KOhm +/-1% K27 LIBG
J29 LVBG
J30 LVREFH
K29 LVREFL
22 LA_CLKN D30 LACLKN
22 LA_CLKP C30 LACLKP
A30 LBCLKN
A29 LBCLKP
22 LA_DATAN0 G31 LADATAN0
22 LA_DATAN1 F32 LADATAN1
22 LA_DATAN2 D31 LADATAN2
22 LA_DATAP0 H31 LADATAP0
22 LA_DATAP1 G32 LADATAP1
22 LA_DATAP2 C31 LADATAP2
E33 LBDATAN0
D33 LBDATAN1
F30 LBDATAN2
E33 LBDATAP0
D32 LBDATAP1
F29 LBDATAP2
EXP_COMPI R28
EXP_ICOMPO M28
R454 24.9 +/-1%
+V1.5S_PCIE
SDV0_TVCLKIN# N30
SDVO_INT# R30
SDVO_FLDSTALL# T29
SDVO_TVCLKIN M30
SDVO_INT P30
SDVO_FLDSTALL T30
SDVOB_RED# P28
SDVOB_GREEN# N32
SDVOB_BLUE# P32
SDVOB_CLKN T32
SDVOB_RED N28
SDVOB_GREEN M32
SDVOB_BLUE P33
SDVOB_CLKP R32
+V1.5S_GMS
TVDAC_A A21
TVDAC_B C20
TVDAC_C E20
TV_REFSET G23
TV_IRTNA B21
TV_IRTNB C21
TV_IRTNC D21
TV_DCONSEL0 G26
TV_DCONSEL1 J26
BLUE
GREEN
RED
R156 150 +/ -1%
R150 150 +/ -1%
R145 150 +/ -1%
+V3.3S
R161 10K +/-5% L_DDC_CLK
R173 10K +/-5% L_DDC_DATA
R169 10K +/-5% L_CTLA_CLK
R164 10K +/-5% L_CTLB_DATA

Title
<Title>

Size C
Document Number
<Doc>
Rev
<RevCode>

Date: Saturday, March 28, 2009 Sheet 11 of 40

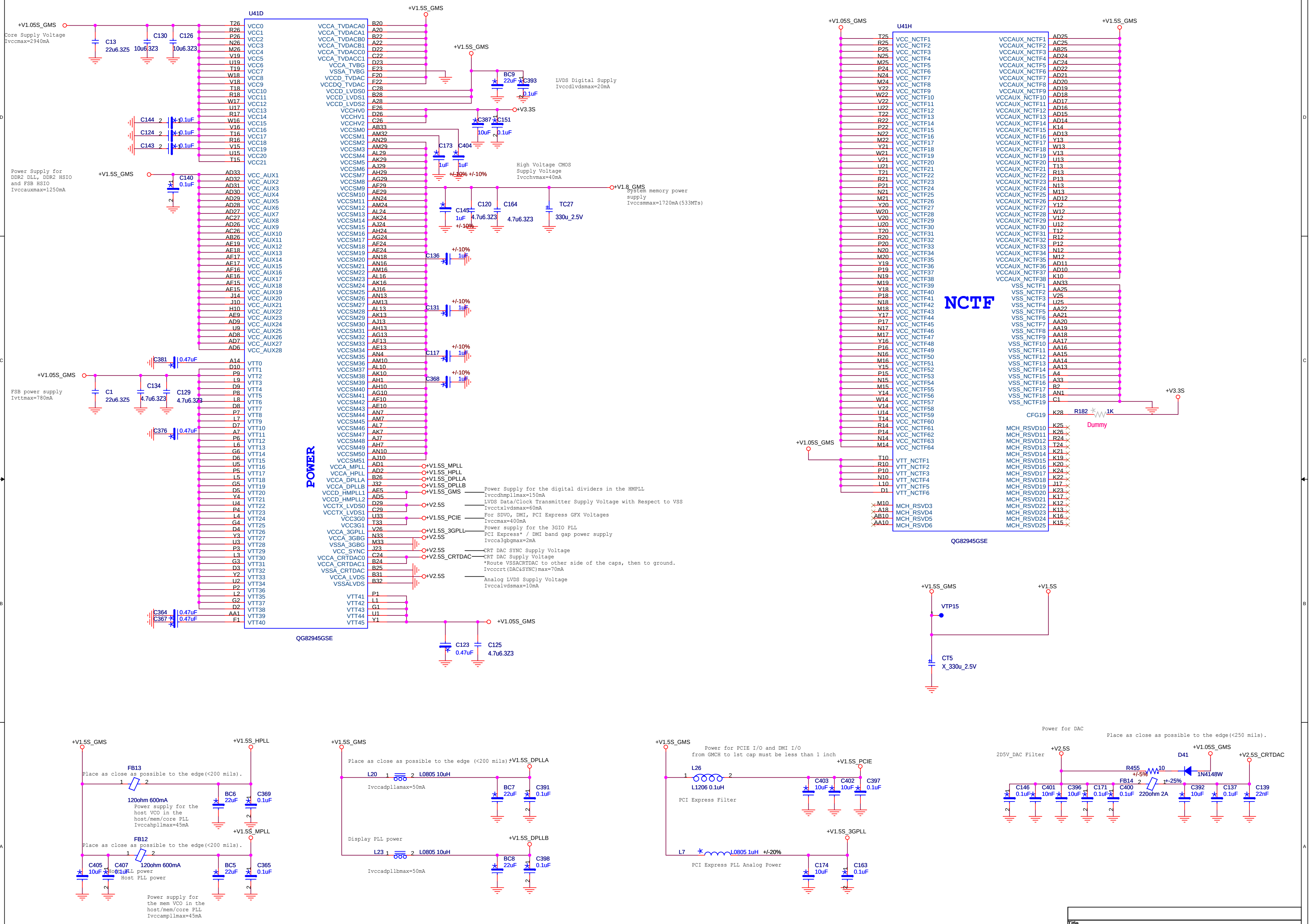
U41D
POWER
QG82945GSE
Core Supply Voltage
Ivccmax=2940mA
+V1.05S_GMS
C13 22u6.3Z5
C130 10u6.3Z3
C126 10u6.3Z3
C144 0.1uF
C124 0.1uF
C143 0.1uF
Power Supply for DDR2 DLL, DDR2 HSIO and FSB HSIO
Ivccauxmax=1250mA
+V1.5S_GMS
C140 0.1uF
C381 0.47uF
FSB power supply
Ivttmax=780mA
C1 22u6.3Z5
C134 4.7u6.3Z3
C129 4.7u6.3Z3
C376 0.47uF
C364 0.47uF
C367 0.47uF
BC9 22uF
C393 0.1uF
LVDS Digital Supply
Ivccdlvdsmax=20mA
+V3.3S
C387 10uF
C151 0.1uF
C173 1uF
C404 1uF
+/-10%
High Voltage CMOS Supply Voltage
Ivcchvmax=40mA
+V1.8_GMS
System memory power supply
Ivccsmmax=1720mA(533MTs)
C145 1uF
C120 4.7u6.3Z3
C164 4.7u6.3Z3
TC27 330u_2.5V
C136 1uF
C131 1uF
C117 1uF
C368 1uF
+V1.5S_MPLL
+V1.5S_HPLL
+V1.5S_DPLLA
+V1.5S_DPLLB
+V2.5S
+V1.5S_PCIE
+V1.5S_3GPLL
+V2.5S_CRTDAC
Power Supply for the digital dividers in the HMPLL
Ivccdhmpllmax=150mA
LVDS Data/Clock Transmitter Supply Voltage with Respect to VSS
Ivcctxlvdsmax=60mA
For SDVO, DMI, PCI Express GFX Voltages
Ivccmax=400mA
Power supply for the 3GIO PLL
PCI Express* / DMI band gap power supply
Ivcca3gbgmax=2mA
CRT DAC SYNC Supply Voltage
CRT DAC Supply Voltage
*Route VSSACRTDAC to other side of the caps, then to ground.
Ivccrt(DAC&SYNC)max=70mA
Analog LVDS Supply Voltage
Ivccalvdsmax=10mA
C123 0.47uF
C125 4.7u6.3Z3
U41H
NCTF
QG82945GSE
CFG19
R182 1K
Dummy
+V3.3S
VTP15
+V1.5S
CT5 X_330u_2.5V
+V1.5S_HPLL
FB13 120ohm 600mA
Place as close as possible to the edge(<200 mils).
BC6 22uF
C369 0.1uF
Power supply for the host VCO in the host/mem/core PLL
Ivccahpllmax=45mA
FB12 120ohm 600mA
C405 10uF
C407 0.1uF
Host PLL power
BC5 22uF
C365 0.1uF
Power supply for the mem VCO in the host/mem/core PLL
Ivccampllmax=45mA
Place as close as possible to the edge (<200 mils).
L20 L0805 10uH
Ivccadpllamax=50mA
BC7 22uF
C391 0.1uF
Display PLL power
L23 L0805 10uH
Ivccadpllbmax=50mA
BC8 22uF
C398 0.1uF
Power for PCIE I/O and DMI I/O from GMCH to 1st cap must be less than 1 inch
L26 L1206 0.1uH
C403 10uF
C402 10uF
C397 0.1uF
PCI Express Filter
L7 L0805 1uH +/-20%
C174 10uF
C163 0.1uF
PCI Express PLL Analog Power
Power for DAC
Place as close as possible to the edge(<250 mils).
2D5V_DAC Filter
R455 10 +/-5%
D41 1N4148W
C146 0.1uF
C401 10nF
C396 10uF
C171 0.1uF
C400 0.1uF
FB14 220ohm 2A +/-25%
C392 10uF
C137 0.1uF
C139 22nF

Title	<Title>		
Size C	Document Number <Doc>		Rev <RevCode>
Date: Wednesday, February 18, 2009	Sheet 12 of 40		

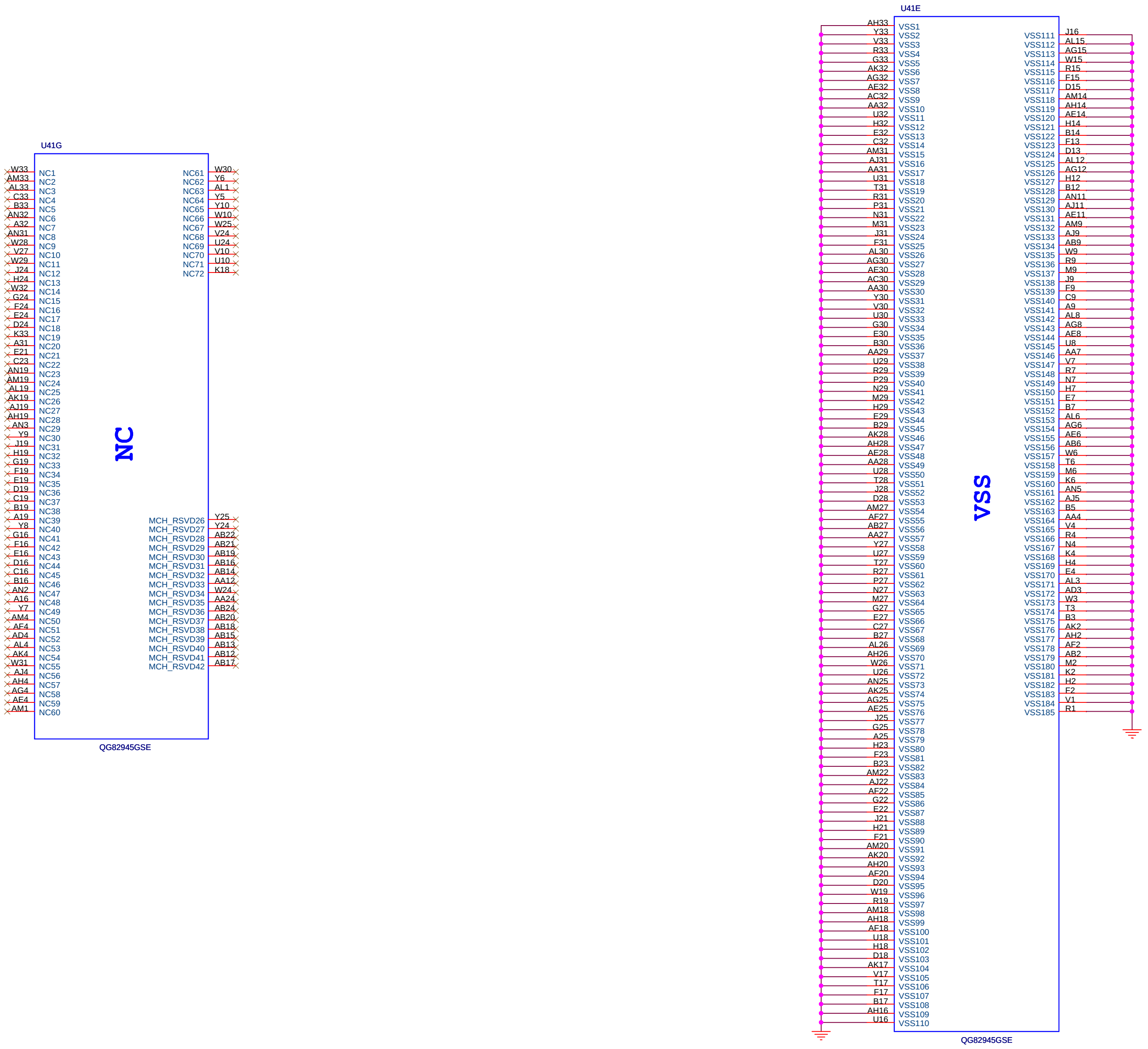
U41G
NC
W33 NC1
AM33 NC2
AL33 NC3
C33 NC4
B33 NC5
AN32 NC6
A32 NC7
AN31 NC8
W28 NC9
V27 NC10
W29 NC11
J24 NC12
H24 NC13
W32 NC14
G24 NC15
F24 NC16
E24 NC17
D24 NC18
K33 NC19
A31 NC20
E21 NC21
C23 NC22
AN19 NC23
AM19 NC24
AL19 NC25
AK19 NC26
AJ19 NC27
AH19 NC28
AN3 NC29
Y9 NC30
J19 NC31
H19 NC32
G19 NC33
F19 NC34
E19 NC35
D19 NC36
C19 NC37
B19 NC38
A19 NC39
Y8 NC40
G16 NC41
F16 NC42
E16 NC43
D16 NC44
C16 NC45
B16 NC46
AN2 NC47
A16 NC48
Y7 NC49
AM4 NC50
AF4 NC51
AD4 NC52
AL4 NC53
AK4 NC54
W31 NC55
AJ4 NC56
AH4 NC57
AG4 NC58
AE4 NC59
AM1 NC60
NC61 W30
NC62 Y6
NC63 AL1
NC64 Y5
NC65 Y10
NC66 W10
NC67 W25
NC68 V24
NC69 U24
NC70 V10
NC71 U10
NC72 K18
MCH_RSVD26 Y25
MCH_RSVD27 Y24
MCH_RSVD28 AB22
MCH_RSVD29 AB21
MCH_RSVD30 AB19
MCH_RSVD31 AB16
MCH_RSVD32 AB14
MCH_RSVD33 AA12
MCH_RSVD34 W24
MCH_RSVD35 AA24
MCH_RSVD36 AB24
MCH_RSVD37 AB20
MCH_RSVD38 AB18
MCH_RSVD39 AB15
MCH_RSVD40 AB13
MCH_RSVD41 AB12
MCH_RSVD42 AB17
QG82945GSE
U41E
VSS
AH33 VSS1
Y33 VSS2
V33 VSS3
R33 VSS4
G33 VSS5
AK32 VSS6
AG32 VSS7
AE32 VSS8
AC32 VSS9
AA32 VSS10
U32 VSS11
H32 VSS12
E32 VSS13
C32 VSS14
AM31 VSS15
AJ31 VSS16
AA31 VSS17
U31 VSS18
T31 VSS19
R31 VSS20
P31 VSS21
N31 VSS22
M31 VSS23
J31 VSS24
F31 VSS25
AL30 VSS26
AG30 VSS27
AE30 VSS28
AC30 VSS29
AA30 VSS30
Y30 VSS31
V30 VSS32
U30 VSS33
G30 VSS34
E30 VSS35
B30 VSS36
AA29 VSS37
U29 VSS38
R29 VSS39
P29 VSS40
N29 VSS41
M29 VSS42
H29 VSS43
E29 VSS44
B29 VSS45
AK28 VSS46
AH28 VSS47
AF28 VSS48
AA28 VSS49
U28 VSS50
T28 VSS51
J28 VSS52
D28 VSS53
AM27 VSS54
AF27 VSS55
AB27 VSS56
AA27 VSS57
Y27 VSS58
U27 VSS59
T27 VSS60
R27 VSS61
P27 VSS62
N27 VSS63
M27 VSS64
G27 VSS65
E27 VSS66
C27 VSS67
B27 VSS68
AL26 VSS69
AH26 VSS70
W26 VSS71
U26 VSS72
AN25 VSS73
AK25 VSS74
AG25 VSS75
AE25 VSS76
J25 VSS77
G25 VSS78
A25 VSS79
H23 VSS80
F23 VSS81
B23 VSS82
AM22 VSS83
AJ22 VSS84
AF22 VSS85
G22 VSS86
E22 VSS87
J21 VSS88
H21 VSS89
F21 VSS90
AM20 VSS91
AK20 VSS92
AH20 VSS93
AF20 VSS94
D20 VSS95
W19 VSS96
R19 VSS97
AM18 VSS98
AH18 VSS99
AF18 VSS100
U18 VSS101
H18 VSS102
D18 VSS103
AK17 VSS104
V17 VSS105
T17 VSS106
F17 VSS107
B17 VSS108
AH16 VSS109
U16 VSS110
VSS111 J16
VSS112 AL15
VSS113 AG15
VSS114 W15
VSS115 R15
VSS116 F15
VSS117 D15
VSS118 AM14
VSS119 AH14
VSS120 AE14
VSS121 H14
VSS122 B14
VSS123 F13
VSS124 D13
VSS125 AL12
VSS126 AG12
VSS127 H12
VSS128 B12
VSS129 AN11
VSS130 AJ11
VSS131 AE11
VSS132 AM9
VSS133 AJ9
VSS134 AB9
VSS135 W9
VSS136 R9
VSS137 M9
VSS138 J9
VSS139 F9
VSS140 C9
VSS141 A9
VSS142 AL8
VSS143 AG8
VSS144 AE8
VSS145 U8
VSS146 AA7
VSS147 V7
VSS148 R7
VSS149 N7
VSS150 H7
VSS151 E7
VSS152 B7
VSS153 AL6
VSS154 AG6
VSS155 AE6
VSS156 AB6
VSS157 W6
VSS158 T6
VSS159 M6
VSS160 K6
VSS161 AN5
VSS162 AJ5
VSS163 B5
VSS164 AA4
VSS165 V4
VSS166 R4
VSS167 N4
VSS168 K4
VSS169 H4
VSS170 E4
VSS171 AL3
VSS172 AD3
VSS173 W3
VSS174 T3
VSS175 B3
VSS176 AK2
VSS177 AH2
VSS178 AF2
VSS179 AB2
VSS180 M2
VSS181 K2
VSS182 H2
VSS183 F2
VSS184 V1
VSS185 R1
QG82945GSE

Title
<Title>

Size
C
Document Number
<Doc>
Rev
<RevCode>

Date: Wednesday, February 18, 2009 Sheet 13 of 40

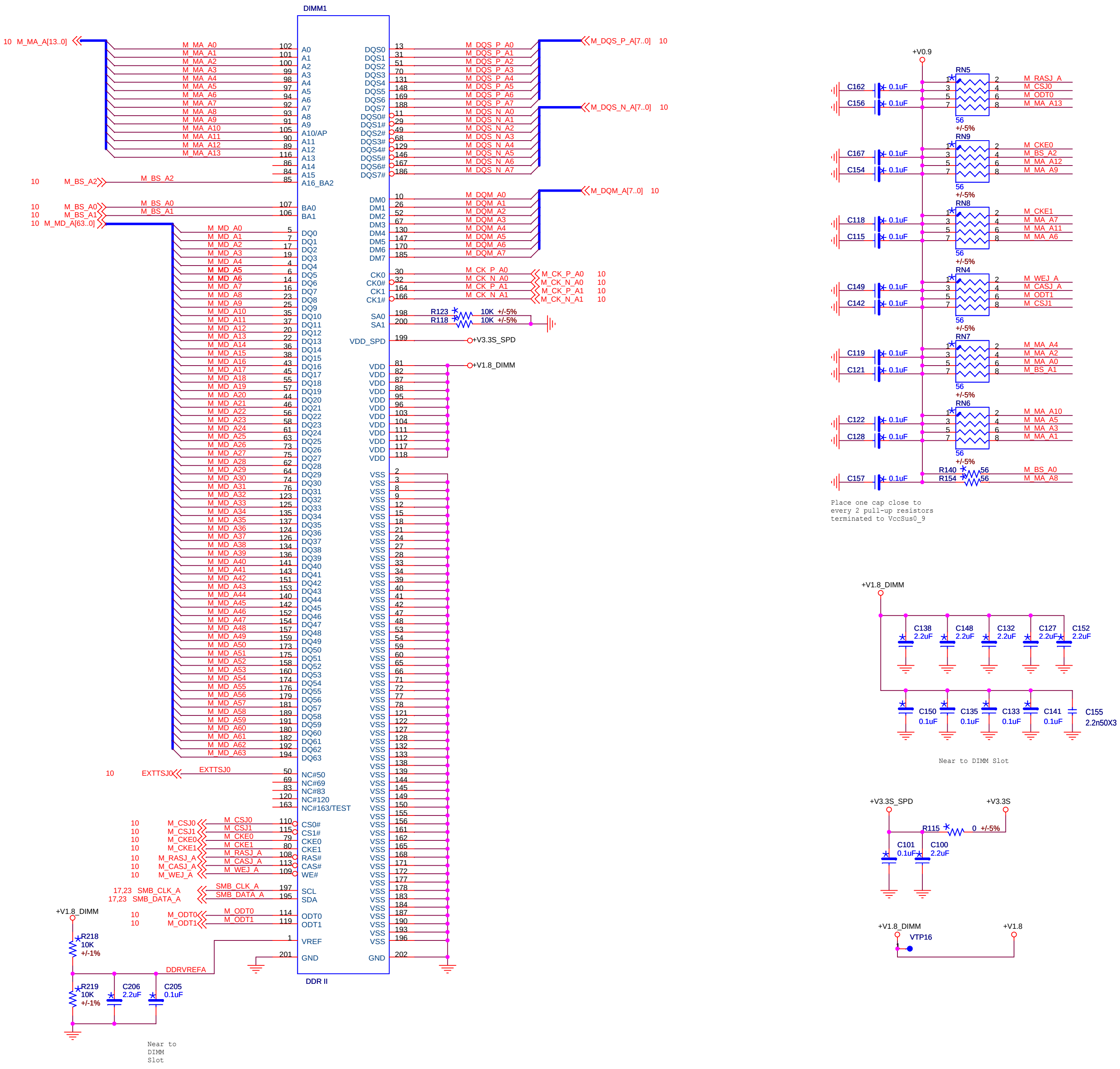
DIMM1
DDR II
10 M_MA_A[13..0]
M_MA_A0 … M_MA_A13
A0
A1
A2
A3
A4
A5
A6
A7
A8
A9
A10/AP
A11
A12
A13
A14
A15
A16_BA2
10 M_BS_A2
M_BS_A2
10 M_BS_A0
10 M_BS_A1
M_BS_A0
M_BS_A1
BA0
BA1
10 M_MD_A[63..0]
M_MD_A0 … M_MD_A63
DQ0 … DQ63
10 EXTTSJ0
EXTTSJ0
NC#50
NC#69
NC#83
NC#120
NC#163/TEST
10 M_CSJ0
10 M_CSJ1
10 M_CKE0
10 M_CKE1
10 M_RASJ_A
10 M_CASJ_A
10 M_WEJ_A
CS0#
CS1#
CKE0
CKE1
RAS#
CAS#
WE#
17,23 SMB_CLK_A
17,23 SMB_DATA_A
SCL
SDA
10 M_ODT0
10 M_ODT1
ODT0
ODT1
VREF
GND
+V1.8_DIMM
R218 10K +/-1%
R219 10K +/-1%
C206 2.2uF
C205 0.1uF
DDRVREFA
DQS0 … DQS7
DQS0# … DQS7#
M_DQS_P_A0 … M_DQS_P_A7
M_DQS_P_A[7..0] 10
M_DQS_N_A0 … M_DQS_N_A7
M_DQS_N_A[7..0] 10
DM0 … DM7
M_DQM_A0 … M_DQM_A7
M_DQM_A[7..0] 10
CK0
CK0#
CK1
CK1#
M_CK_P_A0 10
M_CK_N_A0 10
M_CK_P_A1 10
M_CK_N_A1 10
SA0
SA1
R123 10K +/-5%
R118 10K +/-5%
VDD_SPD
+V3.3S_SPD
VDD
+V1.8_DIMM
VSS
GND
+V0.9
RN5 56 +/-5%
C162 0.1uF
C156 0.1uF
M_RASJ_A
M_CSJ0
M_ODT0
M_MA_A13
RN9 56 +/-5%
C167 0.1uF
C154 0.1uF
M_CKE0
M_BS_A2
M_MA_A12
M_MA_A9
RN8 56 +/-5%
C118 0.1uF
C115 0.1uF
M_CKE1
M_MA_A7
M_MA_A11
M_MA_A6
RN4 56 +/-5%
C149 0.1uF
C142 0.1uF
M_WEJ_A
M_CASJ_A
M_ODT1
M_CSJ1
RN7 56 +/-5%
C119 0.1uF
C121 0.1uF
M_MA_A4
M_MA_A2
M_MA_A0
M_BS_A1
RN6 56 +/-5%
C122 0.1uF
C128 0.1uF
M_MA_A10
M_MA_A5
M_MA_A3
M_MA_A1
R140 56
R154 56
C157 0.1uF
M_BS_A0
M_MA_A8
+V1.8_DIMM
C138 2.2uF
C148 2.2uF
C132 2.2uF
C127 2.2uF
C152 2.2uF
C150 0.1uF
C135 0.1uF
C133 0.1uF
C141 0.1uF
C155 2.2n50X3
+V3.3S_SPD
+V3.3S
R115 0 +/-5%
C101 0.1uF
C100 2.2uF
+V1.8_DIMM
VTP16
+V1.8

Place one cap close to
every 2 pull-up resistors
terminated to VccSus0_9

Near to DIMM Slot

Near to
DIMM
Slot

Title	<Title>	
Size C	Document Number <Doc>	Rev <RevCode>
Date: Saturday, March 28, 2009	Sheet 14 of 40	

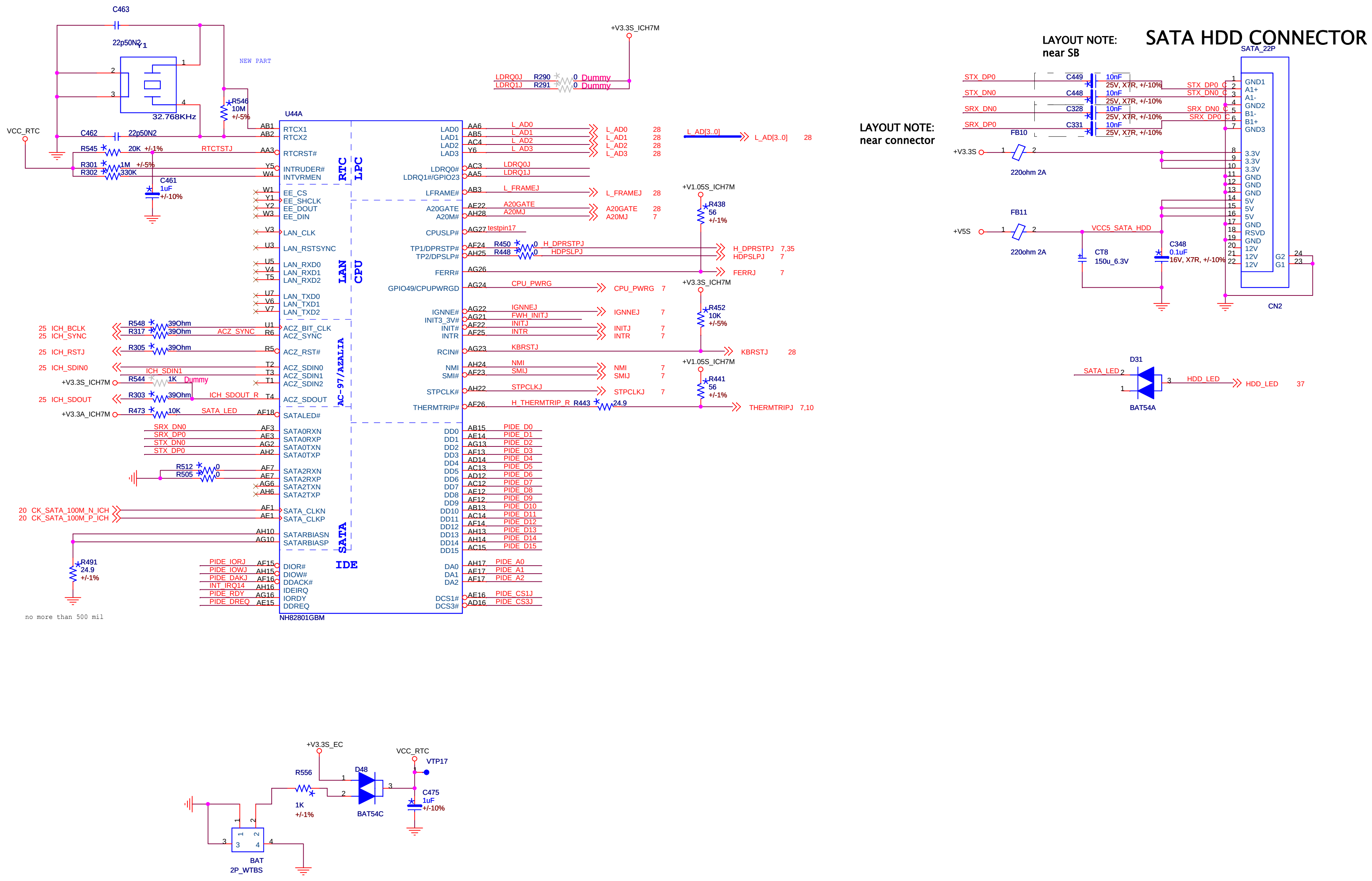
SATA HDD CONNECTOR
LAYOUT NOTE:
near SB
LAYOUT NOTE:
near connector
SATA_22P
CN2
GND1
A1+
A1-
GND2
B1-
B1+
GND3
3.3V
3.3V
3.3V
GND
GND
GND
5V
5V
5V
GND
RSVD
GND
12V
12V
12V
G2
G1
STX_DP0
STX_DN0
SRX_DN0
SRX_DP0
C449
C448
C328
C331
10nF
25V, X7R, +/-10%
FB10
FB11
220ohm 2A
+V3.3S
+V5S
VCC5_SATA_HDD
CT8
150u_6.3V
C348
0.1uF
16V, X7R, +/-10%
D31
BAT54A
SATA_LED
HDD_LED
HDD_LED 37
C463
22p50N2
Y1
32.768KHz
NEW PART
R546
10M
+/-5%
VCC_RTC
C462
22p50N2
R545
20K +/-1%
RTCTSTJ
R301
1M +/-5%
R302
330K
C461
1uF
+/-10%
U44A
NH82801GBM
RTCX1
RTCX2
RTCRST#
INTRUDER#
INTVRMEN
EE_CS
EE_SHCLK
EE_DOUT
EE_DIN
LAN_CLK
LAN_RSTSYNC
LAN_RXD0
LAN_RXD1
LAN_RXD2
LAN_TXD0
LAN_TXD1
LAN_TXD2
ACZ_BIT_CLK
ACZ_SYNC
ACZ_RST#
ACZ_SDIN0
ACZ_SDIN1
ACZ_SDIN2
ACZ_SDOUT
SATALED#
SATA0RXN
SATA0RXP
SATA0TXN
SATA0TXP
SATA2RXN
SATA2RXP
SATA2TXN
SATA2TXP
SATA_CLKN
SATA_CLKP
SATARBIASN
SATARBIASP
DIOR#
DIOW#
DDACK#
IDEIRQ
IORDY
DDREQ
RTC
LPC
LAN
CPU
AC-97/AZALIA
SATA
IDE
LAD0
LAD1
LAD2
LAD3
LDRQ0#
LDRQ1#/GPIO23
LFRAME#
A20GATE
A20M#
CPUSLP#
TP1/DPRSTP#
TP2/DPSLP#
FERR#
GPIO49/CPUPWRGD
IGNNE#
INIT3_3V#
INIT#
INTR
RCIN#
NMI
SMI#
STPCLK#
THERMTRIP#
DD0
DD1
DD2
DD3
DD4
DD5
DD6
DD7
DD8
DD9
DD10
DD11
DD12
DD13
DD14
DD15
DA0
DA1
DA2
DCS1#
DCS3#
+V3.3S_ICH7M
LDRQ0J
LDRQ1J
R290
R291
0 Dummy
L_AD0 28
L_AD1 28
L_AD2 28
L_AD3 28
L_AD[3..0]
L_AD[3..0] 28
L_FRAMEJ 28
A20GATE 28
A20MJ 7
testpin17
+V1.05S_ICH7M
R438
56
+/-1%
R450
R448
0
H_DPRSTPJ
HDPSLPJ
H_DPRSTPJ 7,35
HDPSLPJ 7
FERRJ 7
CPU_PWRG 7
R452
10K
+/-5%
IGNNEJ 7
FWH_INITJ
INITJ 7
INTR 7
KBRSTJ 28
R441
56
+/-1%
NMI 7
SMIJ 7
STPCLKJ 7
H_THERMTRIP_R
R443
24.9
THERMTRIPJ 7,10
PIDE_D0
PIDE_D1
PIDE_D2
PIDE_D3
PIDE_D4
PIDE_D5
PIDE_D6
PIDE_D7
PIDE_D8
PIDE_D9
PIDE_D10
PIDE_D11
PIDE_D12
PIDE_D13
PIDE_D14
PIDE_D15
PIDE_A0
PIDE_A1
PIDE_A2
PIDE_CS1J
PIDE_CS3J
PIDE_IORJ
PIDE_IOWJ
PIDE_DAKJ
INT_IRQ14
PIDE_RDY
PIDE_DREQ
25 ICH_BCLK
25 ICH_SYNC
25 ICH_RSTJ
25 ICH_SDIN0
25 ICH_SDOUT
R548
R317
R305
39Ohm
ACZ_SYNC
ICH_SDIN1
+V3.3S_ICH7M
R544
1K Dummy
R303
ICH_SDOUT_R
+V3.3A_ICH7M
R473
10K
SRX_DN0
SRX_DP0
STX_DN0
STX_DP0
R512
R505
20 CK_SATA_100M_N_ICH
20 CK_SATA_100M_P_ICH
R491
24.9
+/-1%
no more than 500 mil
+V3.3S_EC
VCC_RTC
VTP17
R556
1K
+/-1%
D48
BAT54C
C475
1uF
+/-10%
BAT
2P_WTBS

check with battary if 1 2 pin is correct
check with ME's sample

Title
<Title>

Size C
Document Number <Doc>
Rev <RevCode>

Date: Saturday, March 28, 2009
Sheet 15 of 40

Layout note: PCIE AC coupling caps need
to be within 250 mils of the driver.

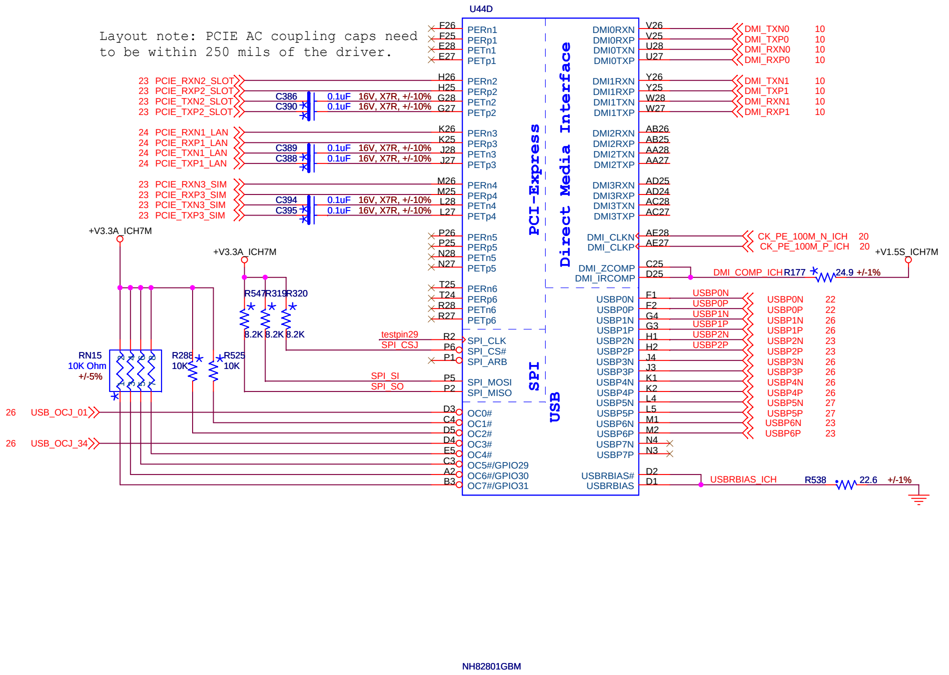
U44D
PCI-Express
Direct Media Interface
SPI
USB
F26 PERn1
F25 PERp1
E28 PETn1
E27 PETp1
H26 PERn2
H25 PERp2
G28 PETn2
G27 PETp2
K26 PERn3
K25 PERp3
J28 PETn3
J27 PETp3
M26 PERn4
M25 PERp4
L28 PETn4
L27 PETp4
P26 PERn5
P25 PERp5
N28 PETn5
N27 PETp5
T25 PERn6
T24 PERp6
R28 PETn6
R27 PETp6
23 PCIE_RXN2_SLOT
23 PCIE_RXP2_SLOT
23 PCIE_TXN2_SLOT
23 PCIE_TXP2_SLOT
C386 0.1uF 16V, X7R, +/-10%
C390 0.1uF 16V, X7R, +/-10%
24 PCIE_RXN1_LAN
24 PCIE_RXP1_LAN
24 PCIE_TXN1_LAN
24 PCIE_TXP1_LAN
C389 0.1uF 16V, X7R, +/-10%
C388 0.1uF 16V, X7R, +/-10%
23 PCIE_RXN3_SIM
23 PCIE_RXP3_SIM
23 PCIE_TXN3_SIM
23 PCIE_TXP3_SIM
C394 0.1uF 16V, X7R, +/-10%
C395 0.1uF 16V, X7R, +/-10%
DMI0RXN V26 DMI_TXN0 10
DMI0RXP V25 DMI_TXP0 10
DMI0TXN U28 DMI_RXN0 10
DMI0TXP U27 DMI_RXP0 10
DMI1RXN Y26 DMI_TXN1 10
DMI1RXP Y25 DMI_TXP1 10
DMI1TXN W28 DMI_RXN1 10
DMI1TXP W27 DMI_RXP1 10
DMI2RXN AB26
DMI2RXP AB25
DMI2TXN AA28
DMI2TXP AA27
DMI3RXN AD25
DMI3RXP AD24
DMI3TXN AC28
DMI3TXP AC27
DMI_CLKN AE28 CK_PE_100M_N_ICH 20
DMI_CLKP AE27 CK_PE_100M_P_ICH 20
DMI_ZCOMP C25
DMI_IRCOMP D25
DMI_COMP_ICH R177 24.9 +/-1%
+V1.5S_ICH7M
+V3.3A_ICH7M
+V3.3A_ICH7M
R547 R319 R320
8.2K 8.2K 8.2K
testpin29
SPI_CSJ
SPI_SI
SPI_SO
R2 SPI_CLK
P6 SPI_CS#
P1 SPI_ARB
P5 SPI_MOSI
P2 SPI_MISO
RN15 10K Ohm +/-5%
R285 10K
R525 10K
26 USB_OCJ_01
26 USB_OCJ_34
D3 OC0#
C4 OC1#
D5 OC2#
D4 OC3#
E5 OC4#
C3 OC5#/GPIO29
A2 OC6#/GPIO30
B3 OC7#/GPIO31
USBP0N F1 USBP0N USBP0N 22
USBP0P F2 USBP0P USBP0P 22
USBP1N G4 USBP1N USBP1N 26
USBP1P G3 USBP1P USBP1P 26
USBP2N H1 USBP2N USBP2N 23
USBP2P H2 USBP2P USBP2P 23
USBP3N J4 USBP3N 26
USBP3P J3 USBP3P 26
USBP4N K1 USBP4N 26
USBP4P K2 USBP4P 26
USBP5N L4 USBP5N 27
USBP5P L5 USBP5P 27
USBP6N M1 USBP6N 23
USBP6P M2 USBP6P 23
USBP7N N4
USBP7P N3
USBRBIAS# D2
USBRBIAS D1
USBRBIAS_ICH R538 22.6 +/-1%
NH82801GBM

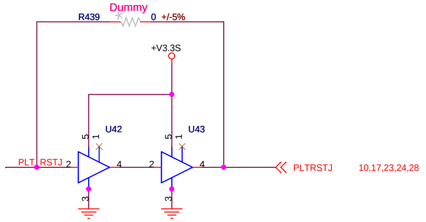
Dummy
R439 0 +/-5%
+V3.3S
U42
U43
5 1
2 4
3
PLT_RSTJ
PLTRSTJ 10,17,23,24,28

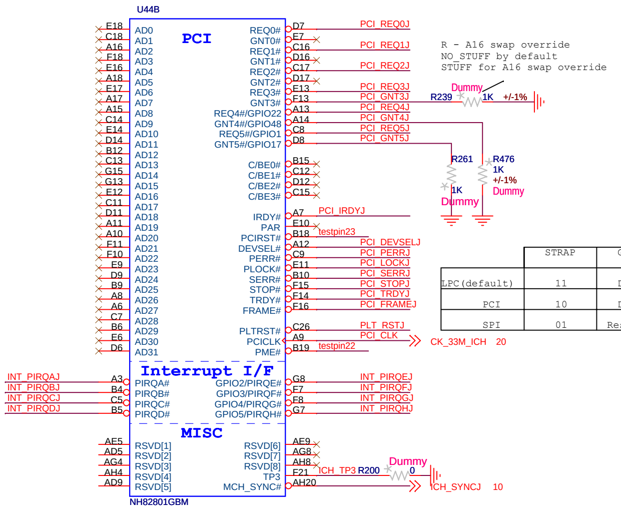
U44B
PCI
E18 AD0
C18 AD1
A16 AD2
F18 AD3
E16 AD4
A18 AD5
E17 AD6
A17 AD7
A15 AD8
C14 AD9
E14 AD10
D14 AD11
B12 AD12
C13 AD13
G15 AD14
G13 AD15
E12 AD16
C11 AD17
D11 AD18
A11 AD19
A10 AD20
F11 AD21
F10 AD22
E9 AD23
D9 AD24
B9 AD25
A8 AD26
A6 AD27
C7 AD28
B6 AD29
E6 AD30
D6 AD31
REQ0# D7 PCI_REQ0J
GNT0# E7
REQ1# C16 PCI_REQ1J
GNT1# D16
REQ2# C17 PCI_REQ2J
GNT2# D17
REQ3# E13 PCI_REQ3J
GNT3# F13 PCI_GNT3J
REQ4#/GPIO22 A13 PCI_REQ4J
GNT4#/GPIO48 A14 PCI_GNT4J
REQ5#/GPIO1 C8 PCI_REQ5J
GNT5#/GPIO17 D8 PCI_GNT5J
C/BE0# B15
C/BE1# C12
C/BE2# D12
C/BE3# C15
IRDY# A7 PCI_IRDYJ
PAR E10
PCIRST# B18 testpin23
DEVSEL# A12 PCI_DEVSELJ
PERR# C9 PCI_PERRJ
PLOCK# E11 PCI_LOCKJ
SERR# B10 PCI_SERRJ
STOP# F15 PCI_STOPJ
TRDY# F14 PCI_TRDYJ
FRAME# F16 PCI_FRAMEJ
PLTRST# C26 PLT_RSTJ
PCICLK A9 PCI_CLK CK_33M_ICH 20
PME# B19 testpin22
R - A16 swap override
NO_STUFF by default
STUFF for A16 swap override
Dummy
R239 1K +/-1%
R261 1K Dummy
R476 1K +/-1% Dummy
Interrupt I/F
INT_PIRQAJ A3 PIRQA#
INT_PIRQBJ B4 PIRQB#
INT_PIRQCJ C5 PIRQC#
INT_PIRQDJ B5 PIRQD#
GPIO2/PIRQE# G8 INT_PIRQEJ
GPIO3/PIRQF# F7 INT_PIRQFJ
GPIO4/PIRQG# F8 INT_PIRQGJ
GPIO5/PIRQH# G7 INT_PIRQHJ
MISC
AE5 RSVD[1]
AD5 RSVD[2]
AG4 RSVD[3]
AH4 RSVD[4]
AD9 RSVD[5]
RSVD[6] AF9
RSVD[7] AG8
RSVD[8] AH8
TP3 F21 ICH_TP3 R200 0 Dummy
MCH_SYNC# AH20 ICH_SYNCJ 10
NH82801GBM

	STRAP	GNT5J	GNT4J
LPC(default)	11	Dummy	Dummy
PCI	10	Dummy	Reserve
SPI	01	Reserve	Dummy

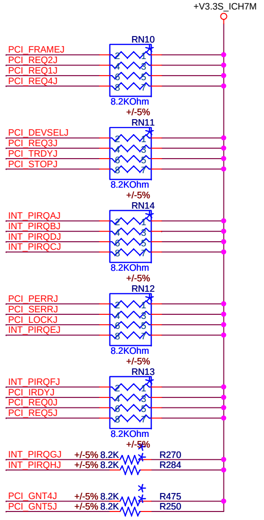
+V3.3S_ICH7M
RN10
PCI_FRAMEJ
PCI_REQ2J
PCI_REQ1J
PCI_REQ4J
8.2KOhm +/-5%
RN11
PCI_DEVSELJ
PCI_REQ3J
PCI_TRDYJ
PCI_STOPJ
8.2KOhm +/-5%
RN14
INT_PIRQAJ
INT_PIRQBJ
INT_PIRQDJ
INT_PIRQCJ
8.2KOhm +/-5%
RN12
PCI_PERRJ
PCI_SERRJ
PCI_LOCKJ
INT_PIRQEJ
8.2KOhm +/-5%
RN13
INT_PIRQFJ
PCI_IRDYJ
PCI_REQ0J
PCI_REQ5J
8.2KOhm +/-5%
INT_PIRQGJ +/-5% 8.2K R270
INT_PIRQHJ +/-5% 8.2K R284
PCI_GNT4J +/-5% 8.2K R475
PCI_GNT5J +/-5% 8.2K R250

Title
<Title>

Size C
Document Number <Doc>
Rev <RevCode>

Date: Saturday, March 28, 2009 Sheet 16 of 40

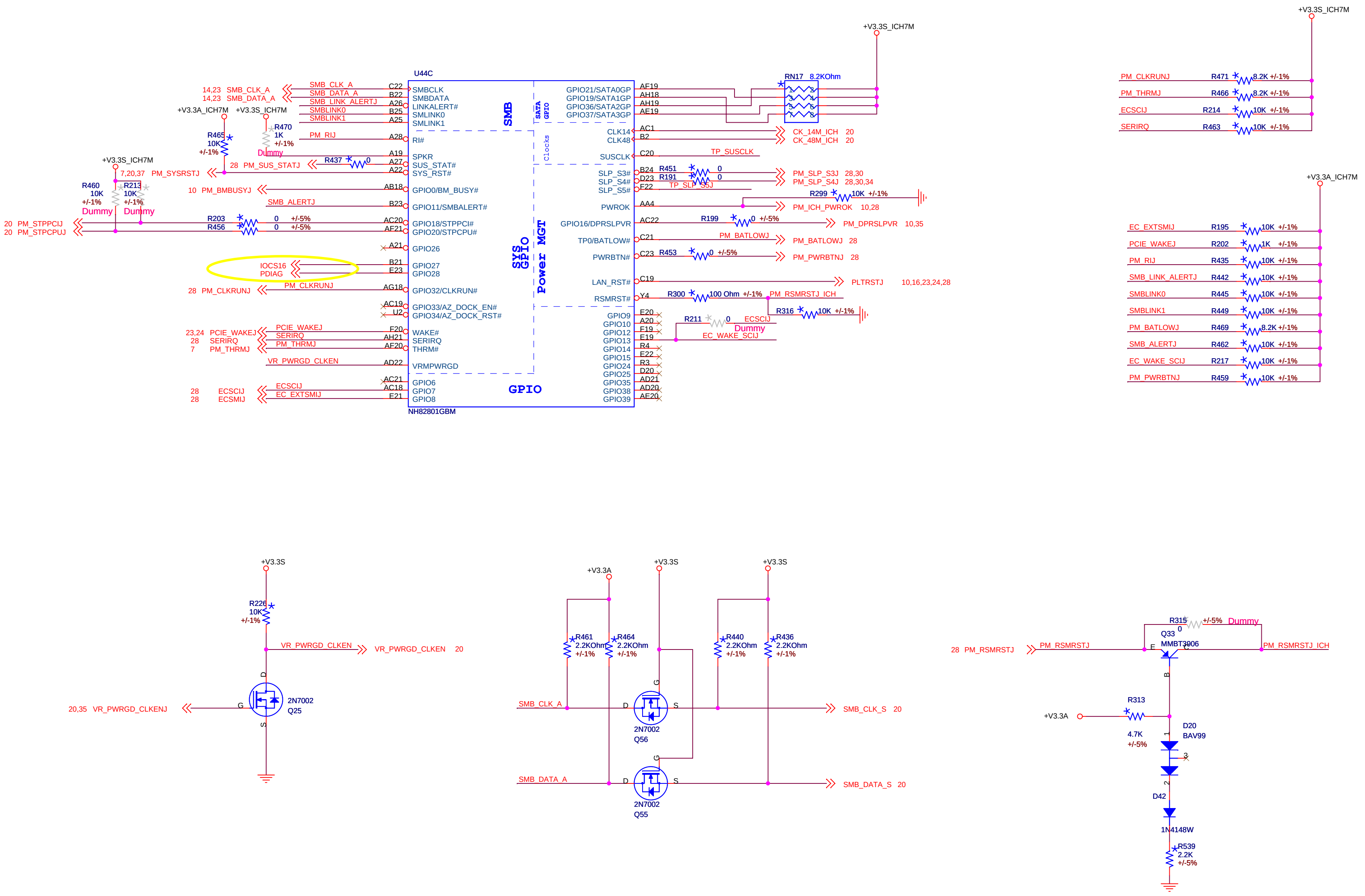
U44C
NH82801GBM
SMB
SATA GPIO
Clocks
SYS GPIO
Power MGT
GPIO
14,23 SMB_CLK_A
14,23 SMB_DATA_A
SMB_CLK_A C22 SMBCLK
SMB_DATA_A B22 SMBDATA
SMB_LINK_ALERTJ A26 LINKALERT#
SMBLINK0 B25 SMLINK0
SMBLINK1 A25 SMLINK1
PM_RIJ A28 RI#
A19 SPKR
A27 SUS_STAT#
A22 SYS_RST#
AB18 GPIO0/BM_BUSY#
SMB_ALERTJ B23 GPIO11/SMBALERT#
AC20 GPIO18/STPPCI#
AF21 GPIO20/STPCPU#
A21 GPIO26
B21 GPIO27
E23 GPIO28
IOCS16
PDIAG
PM_CLKRUNJ AG18 GPIO32/CLKRUN#
AC19 GPIO33/AZ_DOCK_EN#
U2 GPIO34/AZ_DOCK_RST#
PCIE_WAKEJ F20 WAKE#
SERIRQ AH21 SERIRQ
PM_THRMJ AF20 THRM#
VR_PWRGD_CLKEN AD22 VRMPWRGD
AC21 GPIO6
ECSCIJ AC18 GPIO7
EC_EXTSMIJ F21 GPIO8
+V3.3A_ICH7M
+V3.3S_ICH7M
R465 10K +/-1%
R470 1K +/-1% Dummy
R437 0
28 PM_SUS_STATJ
7,20,37 PM_SYSRSTJ
R460 10K +/-1% Dummy
R213 10K +/-1% Dummy
10 PM_BMBUSYJ
20 PM_STPPCIJ
20 PM_STPCPUJ
R203 0 +/-5%
R456 0 +/-5%
28 PM_CLKRUNJ
23,24 PCIE_WAKEJ
28 SERIRQ
7 PM_THRMJ
28 ECSCIJ
28 ECSMIJ
GPIO21/SATA0GP AF19
GPIO19/SATA1GP AH18
GPIO36/SATA2GP AH19
GPIO37/SATA3GP AE19
RN17 8.2KOhm
+V3.3S_ICH7M
CLK14 AC1 CK_14M_ICH 20
CLK48 B2 CK_48M_ICH 20
SUSCLK C20 TP_SUSCLK
SLP_S3# B24 R451 0 PM_SLP_S3J 28,30
SLP_S4# D23 R191 0 PM_SLP_S4J 28,30,34
SLP_S5# F22 TP_SLP_S5J
R299 10K +/-1%
PWROK AA4 PM_ICH_PWROK 10,28
GPIO16/DPRSLPVR AC22 R199 0 +/-5% PM_DPRSLPVR 10,35
TP0/BATLOW# C21 PM_BATLOWJ PM_BATLOWJ 28
PWRBTN# C23 R453 0 +/-5% PM_PWRBTNJ 28
LAN_RST# C19 PLTRSTJ 10,16,23,24,28
RSMRST# Y4 R300 100 Ohm +/-1% PM_RSMRST_ICH
R316 10K +/-1%
GPIO9 E20
GPIO10 A20 R211 0 ECSCIJ Dummy
GPIO12 F19 EC_WAKE_SCIJ
GPIO13 E19
GPIO14 R4
GPIO15 E22
GPIO24 R3
GPIO25 D20
GPIO35 AD21
GPIO38 AD20
GPIO39 AE20
+V3.3S_ICH7M
PM_CLKRUNJ R471 8.2K +/-1%
PM_THRMJ R466 8.2K +/-1%
ECSCIJ R214 10K +/-1%
SERIRQ R463 10K +/-1%
+V3.3A_ICH7M
EC_EXTSMIJ R195 10K +/-1%
PCIE_WAKEJ R202 1K +/-1%
PM_RIJ R435 10K +/-1%
SMB_LINK_ALERTJ R442 10K +/-1%
SMBLINK0 R445 10K +/-1%
SMBLINK1 R449 10K +/-1%
PM_BATLOWJ R469 8.2K +/-1%
SMB_ALERTJ R462 10K +/-1%
EC_WAKE_SCIJ R217 10K +/-1%
PM_PWRBTNJ R459 10K +/-1%
+V3.3S
R226 10K +/-1%
VR_PWRGD_CLKEN
VR_PWRGD_CLKEN 20
D G S
2N7002 Q25
20,35 VR_PWRGD_CLKENJ
+V3.3A
+V3.3S
+V3.3S
R461 2.2KOhm +/-1%
R464 2.2KOhm +/-1%
R440 2.2KOhm +/-1%
R436 2.2KOhm +/-1%
SMB_CLK_A
SMB_DATA_A
2N7002 Q56
2N7002 Q55
SMB_CLK_S 20
SMB_DATA_S 20
R315 0 +/-5% Dummy
Q33 MMBT3906
E C B
28 PM_RSMRSTJ
PM_RSMRSTJ
PM_RSMRSTJ_ICH
R313 4.7K +/-5%
+V3.3A
D20 BAV99
1 2 3
D42 1N4148W
R539 2.2K +/-5%

Title		
<Title>		
Size C	Document Number <Doc>	Rev <RevCode>
Date: Saturday, March 28, 2009	Sheet 17 of 40	

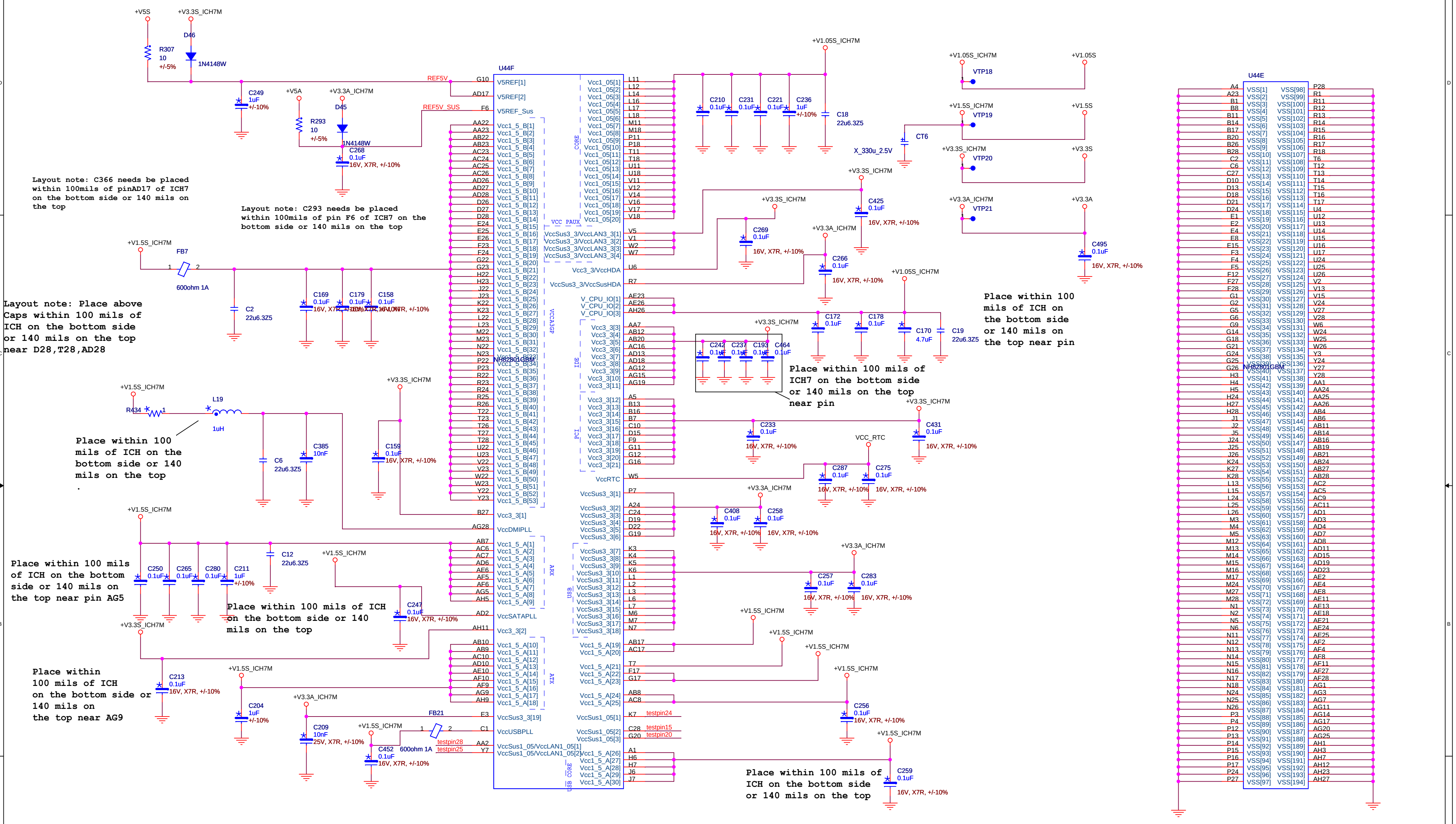
+V5S
+V3.3S_ICH7M
R307
10
+/-5%
D46
1N4148W
C249
1uF
+/-10%
+V5A
+V3.3A_ICH7M
D45
R293
10
+/-5%
1N4148W
C268
0.1uF
16V, X7R, +/-10%
REF5V
REF5V_SUS
U44F
G10
AD17
F6
V5REF[1]
V5REF[2]
V5REF_Sus
Vcc1_5_B[1]
Vcc1_5_B[53]
Vcc1_05[1]
Vcc1_05[20]
CORE
VCC PAUX
VccSus3_3/VccLAN3_3[1]
VccSus3_3/VccLAN3_3[4]
Vcc3_3/VccHDA
VccSus3_3/VccSusHDA
V_CPU_IO[1]
V_CPU_IO[2]
V_CPU_IO[3]
VCCA3GP
Vcc3_3[3]
Vcc3_3[21]
IDE
PCI
VccRTC
VccSus3_3[1]
VccSus3_3[18]
USB
Vcc3_3[1]
VccDMIPLL
Vcc1_5_A[1]
Vcc1_5_A[25]
ARX
ATX
VccSATAPLL
Vcc3_3[2]
VccSus3_3[19]
VccUSBPLL
VccSus1_05/VccLAN1_05[1]
VccSus1_05/VccLAN1_05[2]
VccSus1_05[1]
VccSus1_05[2]
VccSus1_05[3]
NH82801GBM
+V1.05S_ICH7M
C210
0.1uF
C231
0.1uF
C221
0.1uF
C236
1uF
+/-10%
C18
22u6.3Z5
+V1.05S_ICH7M
+V1.05S
VTP18
+V1.5S_ICH7M
+V1.5S
VTP19
CT6
X_330u_2.5V
+V3.3S_ICH7M
+V3.3S
VTP20
+V3.3A_ICH7M
+V3.3A
VTP21
C495
0.1uF
16V, X7R, +/-10%
C425
0.1uF
16V, X7R, +/-10%
C269
0.1uF
16V, X7R, +/-10%
C266
0.1uF
16V, X7R, +/-10%
C172
0.1uF
C178
0.1uF
C170
4.7uF
C19
22u6.3Z5
C242
0.1uF
C237
0.1uF
C193
0.1uF
C464
0.1uF
C233
0.1uF
16V, X7R, +/-10%
C431
0.1uF
16V, X7R, +/-10%
VCC_RTC
C287
0.1uF
C275
0.1uF
16V, X7R, +/-10%
C408
0.1uF
C258
0.1uF
16V, X7R, +/-10%
C257
0.1uF
C283
0.1uF
16V, X7R, +/-10%
C256
0.1uF
16V, X7R, +/-10%
C259
0.1uF
16V, X7R, +/-10%
testpin24
testpin15
testpin20
testpin28
testpin25
+V1.5S_ICH7M
FB7
600ohm 1A
C2
22u6.3Z5
C169
0.1uF
C179
0.1uF
C158
0.1uF
16V, X7R, +/-10%
R434
L19
1uH
C6
22u6.3Z5
C385
10nF
C159
0.1uF
16V, X7R, +/-10%
C250
0.1uF
C265
0.1uF
C280
0.1uF
C211
1uF
+/-10%
C12
22u6.3Z5
C247
0.1uF
16V, X7R, +/-10%
C213
0.1uF
16V, X7R, +/-10%
C204
1uF
+/-10%
C209
10nF
25V, X7R, +/-10%
C452
0.1uF
16V, X7R, +/-10%
FB21
600ohm 1A
U44E
VSS[1]
VSS[194]
NH82801GBM

Layout note: C366 needs be placed within 100mils of pinAD17 of ICH7 on the bottom side or 140 mils on the top

Layout note: C293 needs be placed within 100mils of pin F6 of ICH7 on the bottom side or 140 mils on the top

Layout note: Place above Caps within 100 mils of ICH on the bottom side or 140 mils on the top near D28,T28,AD28

Place within 100 mils of ICH on the bottom side or 140 mils on the top near pin

Place within 100 mils of ICH7 on the bottom side or 140 mils on the top near pin

Place within 100 mils of ICH on the bottom side or 140 mils on the top .

Place within 100 mils of ICH on the bottom side or 140 mils on the top near pin AG5

Place within 100 mils of ICH on the bottom side or 140 mils on the top

Place within 100 mils of ICH on the bottom side or 140 mils on the top near AG9

Place within 100 mils of ICH on the bottom side or 140 mils on the top

Title	<Title>	
Size C	Document Number <Doc>	Rev <RevCode>
Date: Wednesday, February 18, 2009	Sheet 18 of 40	

Title <Title>		
Size C	Document Number <Doc>	Rev <RevCode>
Date: Wednesday, February 18, 2009	Sheet 19 of 40	

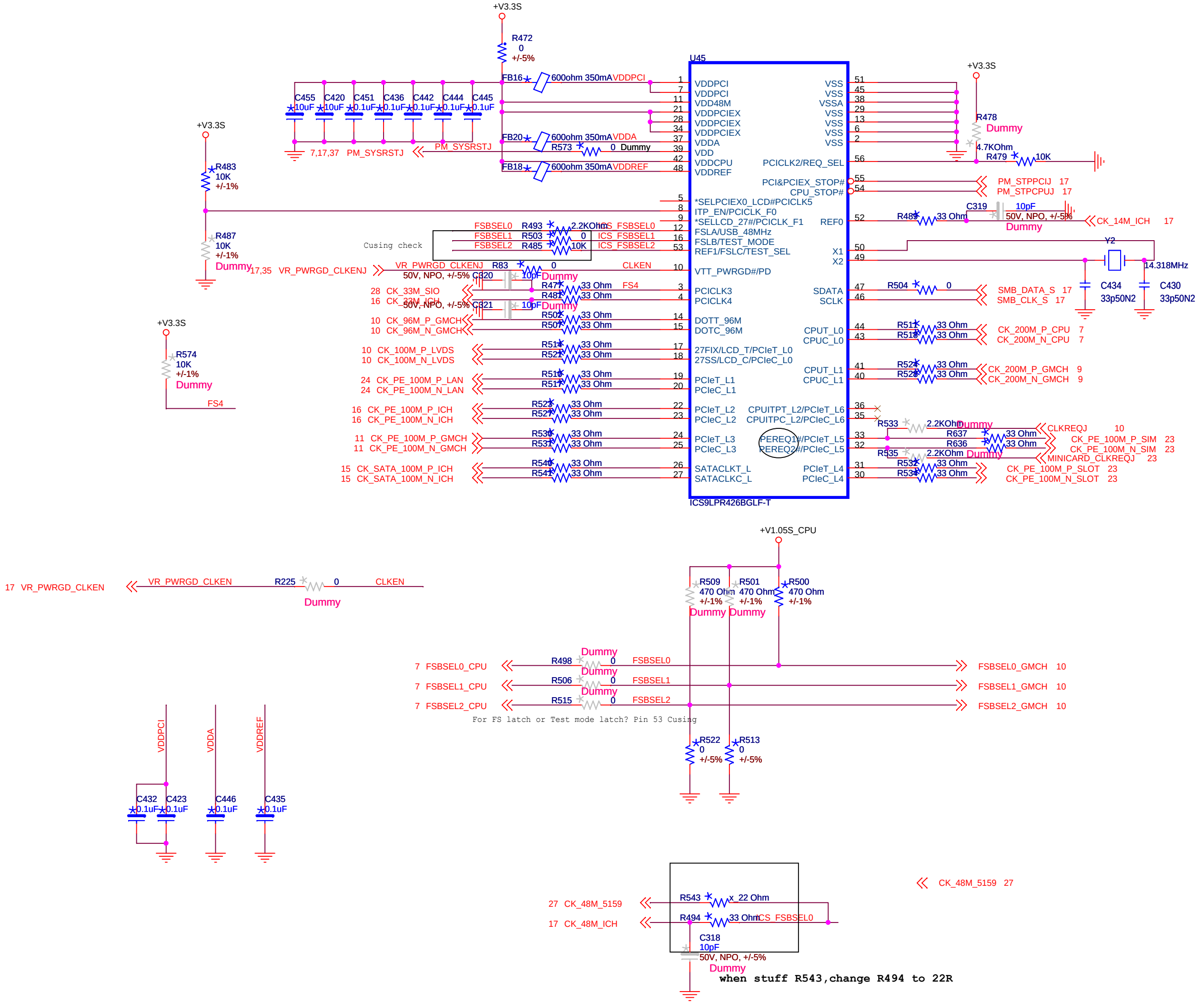
+V3.3S
R472
0
+/-5%
U45
FB16
600ohm 350mA VDDPCI
FB20
600ohm 350mA VDDA
R573
0 Dummy
FB18
600ohm 350mA VDDREF
C455 10uF
C420 10uF
C451 0.1uF
C436 0.1uF
C442 0.1uF
C444 0.1uF
C445 0.1uF
7,17,37 PM_SYSRSTJ
PM_SYSRSTJ
VDDPCI
VDDPCI
VDD48M
VDDPCIEX
VDDPCIEX
VDDPCIEX
VDDA
VDD
VDDCPU
VDDREF
VSS
VSS
VSSA
VSS
VSS
VSS
VSS
+V3.3S
R478
Dummy
4.7KOhm
R479
10K
PCICLK2/REQ_SEL
PCI&PCIEX_STOP#
CPU_STOP#
PM_STPPCIJ 17
PM_STPCPUJ 17
*SELPCIEX0_LCD#PCICLK5
ITP_EN/PCICLK_F0
*SELLCD_27#/PCICLK_F1
FSLA/USB_48MHz
FSLB/TEST_MODE
REF1/FSLC/TEST_SEL
REF0
R486
33 Ohm
C319
10pF
50V, NPO, +/-5%
Dummy
CK_14M_ICH 17
X1
X2
Y2
14.318MHz
C434
33p50N2
C430
33p50N2
+V3.3S
R483
10K
+/-1%
R487
10K
+/-1%
Dummy
Cusing check
FSBSEL0
FSBSEL1
FSBSEL2
R493
R503
R485
2.2KOhm
0
10K
ICS_FSBSEL0
ICS_FSBSEL1
ICS_FSBSEL2
17,35 VR_PWRGD_CLKENJ
VR_PWRGD_CLKENJ
R83
0
CLKEN
VTT_PWRGD#/PD
C320
10pF
50V, NPO, +/-5%
Dummy
C321
10pF
Dummy
28 CK_33M_SIO
16 CK_33M_ICH
R479
R481
33 Ohm
FS4
PCICLK3
PCICLK4
SDATA
SCLK
R504
0
SMB_DATA_S 17
SMB_CLK_S 17
10 CK_96M_P_GMCH
10 CK_96M_N_GMCH
R502
R501
DOTT_96M
DOTC_96M
CPUT_L0
CPUC_L0
R517
R518
CK_200M_P_CPU 7
CK_200M_N_CPU 7
10 CK_100M_P_LVDS
10 CK_100M_N_LVDS
27FIX/LCD_T/PCIeT_L0
27SS/LCD_C/PCIeC_L0
CPUT_L1
CPUC_L1
R521
R523
CK_200M_P_GMCH 9
CK_200M_N_GMCH 9
24 CK_PE_100M_P_LAN
24 CK_PE_100M_N_LAN
PCIeT_L1
PCIeC_L1
16 CK_PE_100M_P_ICH
16 CK_PE_100M_N_ICH
PCIeT_L2
PCIeC_L2
CPUITPT_L2/PCIeT_L6
CPUITPC_L2/PCIeC_L6
R533
2.2KOhm
Dummy
CLKREQJ 10
R637
R636
CK_PE_100M_P_SIM 23
CK_PE_100M_N_SIM 23
11 CK_PE_100M_P_GMCH
11 CK_PE_100M_N_GMCH
PCIeT_L3
PCIeC_L3
PEREQ1#/PCIeT_L5
PEREQ2#/PCIeC_L5
R535
2.2KOhm
Dummy
MINICARD_CLKREQJ 23
15 CK_SATA_100M_P_ICH
15 CK_SATA_100M_N_ICH
SATACLKT_L
SATACLKC_L
PCIeT_L4
PCIeC_L4
R539
R534
CK_PE_100M_P_SLOT 23
CK_PE_100M_N_SLOT 23
ICS9LPR426BGLF-T
+V3.3S
R574
10K
+/-1%
Dummy
FS4
17 VR_PWRGD_CLKEN
VR_PWRGD_CLKEN
R225
0
CLKEN
Dummy
+V1.05S_CPU
R509
470 Ohm
+/-1%
Dummy
R501
470 Ohm
+/-1%
Dummy
R500
470 Ohm
+/-1%
7 FSBSEL0_CPU
R498
0
Dummy
FSBSEL0
FSBSEL0_GMCH 10
7 FSBSEL1_CPU
R506
0
Dummy
FSBSEL1
FSBSEL1_GMCH 10
7 FSBSEL2_CPU
R515
0
Dummy
FSBSEL2
FSBSEL2_GMCH 10
For FS latch or Test mode latch? Pin 53 Cusing
R522
0
+/-5%
R513
0
+/-5%
VDDPCI
VDDA
VDDREF
C432 0.1uF
C423 0.1uF
C446 0.1uF
C435 0.1uF
CK_48M_5159 27
27 CK_48M_5159
17 CK_48M_ICH
R543
x_22 Ohm
R494
33 Ohm
ICS_FSBSEL0
C318
10pF
50V, NPO, +/-5%
Dummy
when stuff R543,change R494 to 22R

Title	<Title>	
Size C	Document Number <Doc>	Rev <RevCode>
Date: Saturday, March 28, 2009	Sheet 20 of 40	

RGB routing
1. from GMCH to the first 150 ohm resistor: 12 mils(min. 6 mils spacing)
2. from the first 150 ohm res. to the second 150 ohm resistor: 7 mils
3. from the second 150 ohm resistor to connector: 4 mils
4. spacing minimum 6 mils, 30 mils spacing is recommended
5. R,G,B should be length matched to 200 mils, max. length is 8400 mils
6. R,G,B signals should be ground referenced

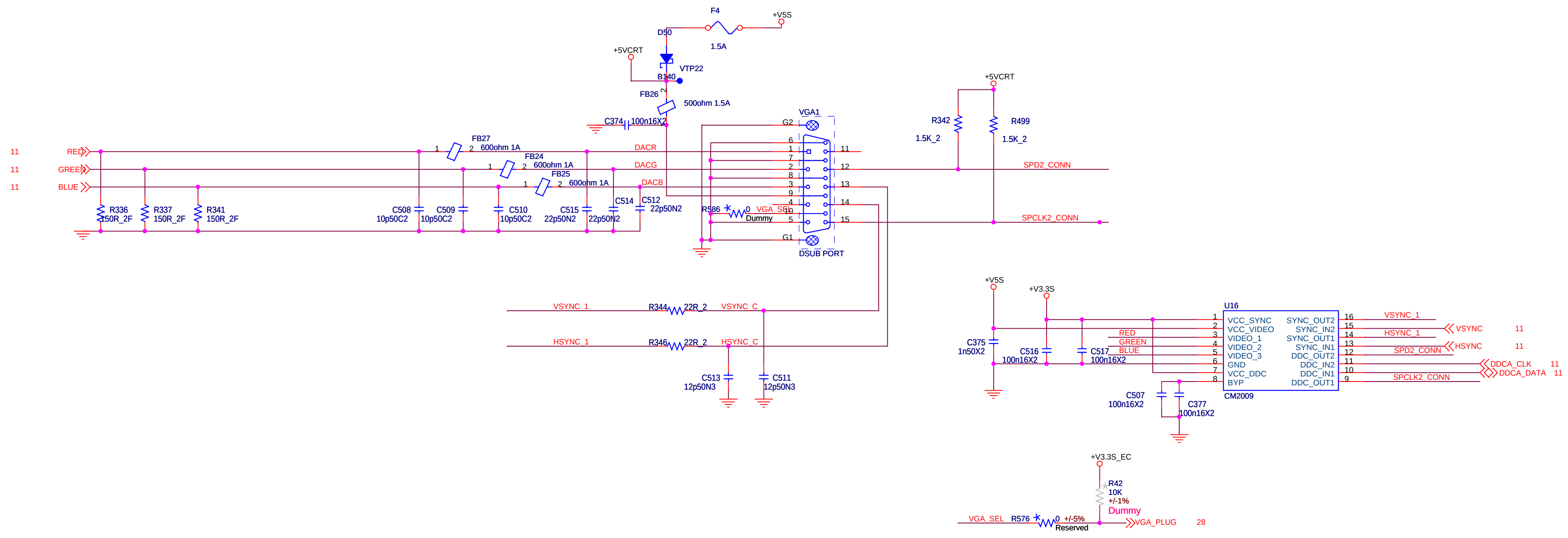
F4
1.5A
+V5S
D50
+5VCRT
VTP22
B140
FB26
500ohm 1.5A
C374
100n16X2
VGA1
G2
G1
DSUB PORT
11 RED
11 GREEN
11 BLUE
FB27
600ohm 1A
FB24
600ohm 1A
FB25
600ohm 1A
DACR
DACG
DACB
R336
150R_2F
R337
150R_2F
R341
150R_2F
C508
10p50C2
C509
10p50C2
C510
10p50C2
C515
22p50N2
C514
22p50N2
C512
22p50N2
R586
0
VGA_SEL
Dummy
+5VCRT
R342
1.5K_2
R499
1.5K_2
SPD2_CONN
SPCLK2_CONN
VSYNC_1
R344
22R_2
VSYNC_C
HSYNC_1
R346
22R_2
HSYNC_C
C513
12p50N3
C511
12p50N3
+V5S
+V3.3S
C375
1n50X2
C516
100n16X2
C517
100n16X2
RED
GREEN
BLUE
U16
VCC_SYNC
VCC_VIDEO
VIDEO_1
VIDEO_2
VIDEO_3
GND
VCC_DDC
BYP
SYNC_OUT2
SYNC_IN2
SYNC_OUT1
SYNC_IN1
DDC_OUT2
DDC_IN2
DDC_IN1
DDC_OUT1
CM2009
C507
100n16X2
C377
100n16X2
VSYNC_1
VSYNC 11
HSYNC_1
HSYNC 11
SPD2_CONN
DDCA_CLK 11
DDCA_DATA 11
SPCLK2_CONN
+V3.3S_EC
R42
10K
+/-1%
Dummy
VGA_SEL
R576
0 +/-5%
Reserved
VGA_PLUG 28

The 150 Ohm resistors near VGA connector and minimizing length to filter. The filters to VGA connector maximum distance 800 mils.

Title	
	<Title>
Size C	Document Number <Doc>	Rev <RevCode>
Date: Saturday, March 28, 2009	Sheet 21 of 40

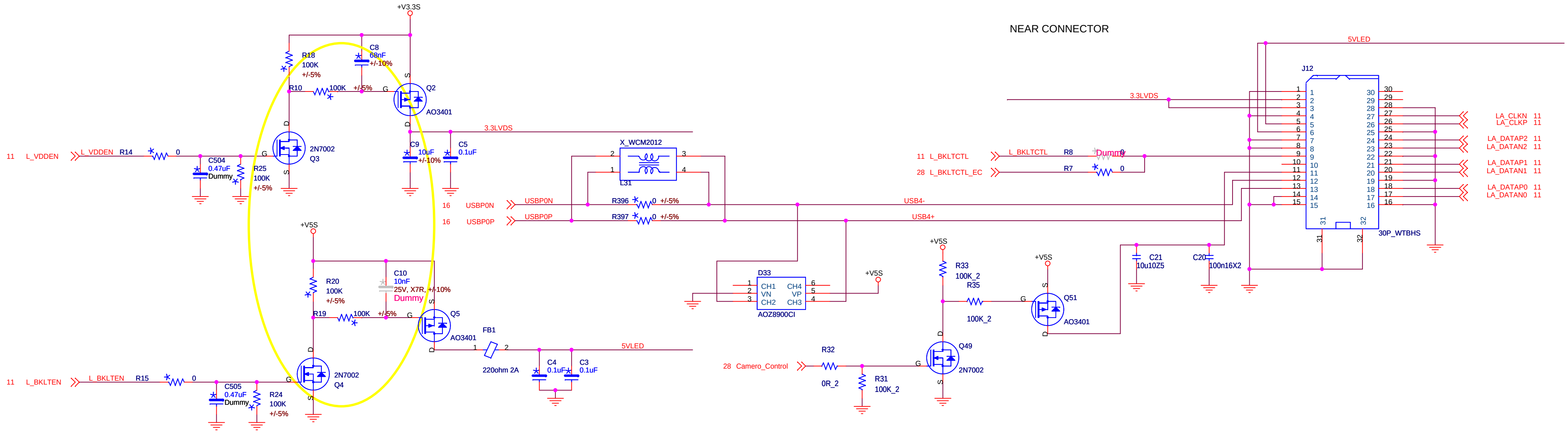
+V3.3S
R18
100K
+/-5%
C8
68nF
+/-10%
R10
100K
+/-5%
G
S
Q2
AO3401
D
3.3LVDS
C9
10uF
+/-10%
C5
0.1uF
2N7002
Q3
11 L_VDDEN
L_VDDEN
R14
0
C504
0.47uF
Dummy
R25
100K
+/-5%
+V5S
R20
100K
+/-5%
C10
10nF
25V, X7R, +/-10%
Dummy
R19
100K
+/-5%
Q5
AO3401
FB1
1
2
220ohm 2A
C4
0.1uF
C3
0.1uF
5VLED
2N7002
Q4
11 L_BKLTEN
L_BKLTEN
R15
0
C505
0.47uF
Dummy
R24
100K
+/-5%
X_WCM2012
L31
16 USBP0N
USBP0N
R396
0 +/-5%
16 USBP0P
USBP0P
R397
0 +/-5%
USB4-
USB4+
D33
CH1
VN
CH2
CH4
VP
CH3
AOZ8900CI
+V5S
R32
0R_2
R31
100K_2
28 Camero_Control
Q49
2N7002
R33
100K_2
R35
100K_2
Q51
AO3401
NEAR CONNECTOR
5VLED
3.3LVDS
11 L_BKLTCTL
L_BKLTCTL
R8
Dummy
0
28 L_BKLTCTL_EC
R7
0
J12
30P_WTBHS
C21
10u10Z5
C20
100n16X2
LA_CLKN 11
LA_CLKP 11
LA_DATAP2 11
LA_DATAN2 11
LA_DATAP1 11
LA_DATAN1 11
LA_DATAP0 11
LA_DATAN0 11

Title
<Title>

Size
C

Document Number
<Doc>

Rev
<RevCode>

Date: Saturday, March 28, 2009

Sheet 22 of 40

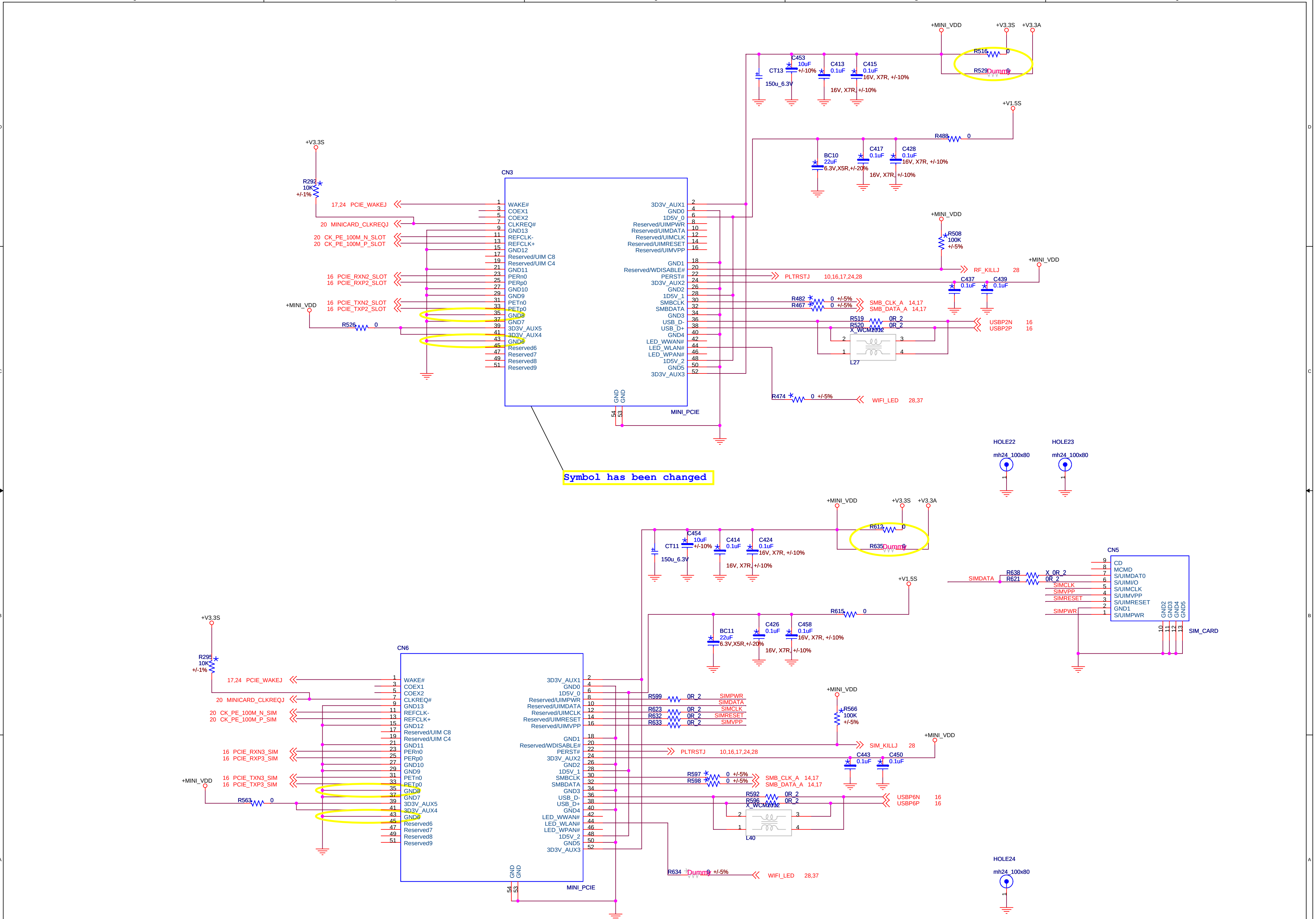
CN3
WAKE#
COEX1
COEX2
CLKREQ#
GND13
REFCLK-
REFCLK+
GND12
Reserved/UIM C8
Reserved/UIM C4
GND11
PERn0
PERp0
GND10
GND9
PETn0
PETp0
GND8
GND7
3D3V_AUX5
3D3V_AUX4
GND6
Reserved6
Reserved7
Reserved8
Reserved9
3D3V_AUX1
GND0
1D5V_0
Reserved/UIMPWR
Reserved/UIMDATA
Reserved/UIMCLK
Reserved/UIMRESET
Reserved/UIMVPP
GND1
Reserved/WDISABLE#
PERST#
3D3V_AUX2
GND2
1D5V_1
SMBCLK
SMBDATA
GND3
USB_D-
USB_D+
GND4
LED_WWAN#
LED_WLAN#
LED_WPAN#
1D5V_2
GND5
3D3V_AUX3
GND
GND
MINI_PCIE
17,24 PCIE_WAKEJ
20 MINICARD_CLKREQJ
20 CK_PE_100M_N_SLOT
20 CK_PE_100M_P_SLOT
16 PCIE_RXN2_SLOT
16 PCIE_RXP2_SLOT
16 PCIE_TXN2_SLOT
16 PCIE_TXP2_SLOT
+V3.3S
R292 10K +/-1%
+MINI_VDD
R526 0
Symbol has been changed
+MINI_VDD
+V3.3S
+V3.3A
R516 0
R529 Dummy 0
C453 10uF +/-10%
CT13 150u_6.3V
C413 0.1uF
C415 0.1uF 16V, X7R, +/-10%
16V, X7R, +/-10%
+V1.5S
R488 0
BC10 22uF 6.3V,X5R,+/-20%
C417 0.1uF
C428 0.1uF 16V, X7R, +/-10%
16V, X7R, +/-10%
R508 100K +/-5%
RF_KILLJ 28
PLTRSTJ 10,16,17,24,28
C437 0.1uF
C439 0.1uF
R482 0 +/-5%
R467 0 +/-5%
SMB_CLK_A 14,17
SMB_DATA_A 14,17
R519 0R_2
R520 0R_2
X_WCM2012
L27
USBP2N 16
USBP2P 16
R474 0 +/-5%
WIFI_LED 28,37
HOLE22 mh24_100x80
HOLE23 mh24_100x80
CN6
MINI_PCIE
17,24 PCIE_WAKEJ
20 MINICARD_CLKREQJ
20 CK_PE_100M_N_SIM
20 CK_PE_100M_P_SIM
16 PCIE_RXN3_SIM
16 PCIE_RXP3_SIM
16 PCIE_TXN3_SIM
16 PCIE_TXP3_SIM
+V3.3S
R295 10K +/-1%
+MINI_VDD
R563 0
+MINI_VDD
+V3.3S
+V3.3A
R612 0
R635 Dummy 0
C454 10uF +/-10%
CT11 150u_6.3V
C414 0.1uF
C424 0.1uF 16V, X7R, +/-10%
16V, X7R, +/-10%
+V1.5S
R615 0
BC11 22uF 6.3V,X5R,+/-20%
C426 0.1uF
C458 0.1uF 16V, X7R, +/-10%
16V, X7R, +/-10%
R599 0R_2 SIMPWR
SIMDATA
R623 0R_2 SIMCLK
R632 0R_2 SIMRESET
R633 0R_2 SIMVPP
R566 100K +/-5%
SIM_KILLJ 28
PLTRSTJ 10,16,17,24,28
C443 0.1uF
C450 0.1uF
R597 0 +/-5%
R598 0 +/-5%
SMB_CLK_A 14,17
SMB_DATA_A 14,17
R592 0R_2
R596 0R_2
X_WCM2012
L40
USBP6N 16
USBP6P 16
R634 Dummy 0 +/-5%
WIFI_LED 28,37
CN5
CD
MCMD
S/UIMDAT0
S/UIMI/O
S/UIMCLK
S/UIMVPP
S/UIMRESET
GND1
S/UIMPWR
GND2
GND3
GND4
GND5
SIM_CARD
SIMDATA
R638 X_0R_2
R621 0R_2
SIMCLK
SIMVPP
SIMRESET
SIMPWR
HOLE24 mh24_100x80

Title
<Title>

Size C
Document Number <Doc>
Rev <RevCode>

Date: Saturday, March 28, 2009
Sheet 23 of 40

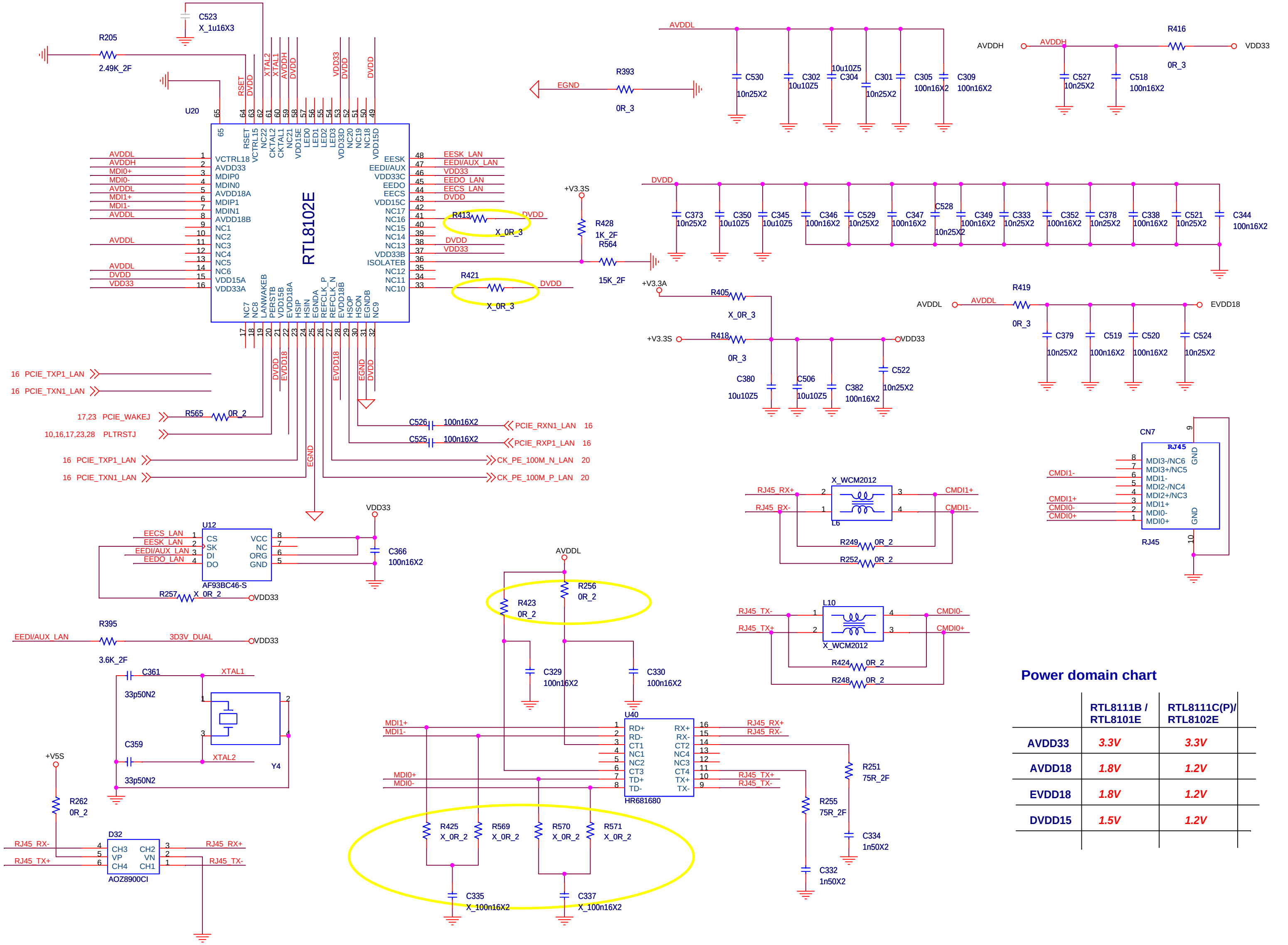
U20
RTL8102E
C523
X_1u16X3
R205
2.49K_2F
RSET
DVDD
XTAL2
XTAL1
AVDDH
DVDD
VDD33
DVDD
DVDD
VCTRL18
AVDD33
MDIP0
MDIN0
AVDD18A
MDIP1
MDIN1
AVDD18B
NC1
NC2
NC3
NC4
NC5
NC6
VDD15A
VDD33A
EESK
EEDI/AUX
VDD33C
EEDO
EECS
VDD15C
NC17
NC16
NC15
NC14
NC13
VDD33B
ISOLATEB
NC12
NC11
NC10
AVDDL
AVDDH
MDI0+
MDI0-
AVDDL
MDI1+
MDI1-
AVDDL
AVDDL
AVDDL
DVDD
VDD33
EESK_LAN
EEDI/AUX_LAN
VDD33
EEDO_LAN
EECS_LAN
DVDD
R413
X_0R_3
DVDD
DVDD
VDD33
R421
X_0R_3
DVDD
+V3.3S
R428
1K_2F
R564
15K_2F
EGND
R393
0R_3
AVDDL
C530
10n25X2
C302
10u10Z5
C304
10u10Z5
C301
10n25X2
C305
100n16X2
C309
100n16X2
AVDDH
AVDDH
C527
10n25X2
C518
100n16X2
R416
0R_3
VDD33
DVDD
C373
10n25X2
C350
10u10Z5
C345
10u10Z5
C346
100n16X2
C529
10n25X2
C347
100n16X2
C528
10n25X2
C349
100n16X2
C333
10n25X2
C352
100n16X2
C378
10n25X2
C338
100n16X2
C521
10n25X2
C344
100n16X2
+V3.3A
R405
X_0R_3
+V3.3S
R418
0R_3
VDD33
C380
10u10Z5
C506
10u10Z5
C382
100n16X2
C522
10n25X2
AVDDL
AVDDL
R419
0R_3
EVDD18
C379
10n25X2
C519
100n16X2
C520
100n16X2
C524
10n25X2
16 PCIE_TXP1_LAN
16 PCIE_TXN1_LAN
17,23 PCIE_WAKEJ
R565
0R_2
10,16,17,23,28 PLTRSTJ
16 PCIE_TXP1_LAN
16 PCIE_TXN1_LAN
DVDD
EVDD18
EVDD18
EGND
DVDD
EGND
C526
100n16X2
PCIE_RXN1_LAN 16
C525
100n16X2
PCIE_RXP1_LAN 16
CK_PE_100M_N_LAN 20
CK_PE_100M_P_LAN 20
LANWAKEB
PERSTB
VDD15B
EVDD18A
HSIP
HSIN
EGNDA
REFCLK_P
REFCLK_N
EVDD18B
HSOP
HSON
EGNDB
NC9
U12
EECS_LAN
EESK_LAN
EEDI/AUX_LAN
EEDO_LAN
CS
SK
DI
DO
VCC
NC
ORG
GND
AF93BC46-S
VDD33
C366
100n16X2
R257
X_0R_2
VDD33
R395
3.6K_2F
EEDI/AUX_LAN
3D3V_DUAL
VDD33
C361
33p50N2
XTAL1
C359
33p50N2
XTAL2
Y4
+V5S
R262
0R_2
D32
RJ45_RX-
RJ45_TX+
CH3
VP
CH4
CH2
VN
CH1
RJ45_RX+
RJ45_TX-
AOZ8900CI
AVDDL
R256
0R_2
R423
0R_2
C329
100n16X2
C330
100n16X2
U40
MDI1+
MDI1-
MDI0+
MDI0-
RD+
RD-
CT1
NC1
NC2
CT3
TD+
TD-
RX+
RX-
CT2
NC4
NC3
CT4
TX+
TX-
HR681680
RJ45_RX+
RJ45_RX-
RJ45_TX+
RJ45_TX-
R251
75R_2F
R255
75R_2F
C334
1n50X2
C332
1n50X2
R425
X_0R_2
R569
X_0R_2
R570
X_0R_2
R571
X_0R_2
C335
X_100n16X2
C337
X_100n16X2
X_WCM2012
RJ45_RX+
RJ45_RX-
L6
CMDI1+
CMDI1-
R249
0R_2
R252
0R_2
L10
RJ45_TX-
RJ45_TX+
X_WCM2012
CMDI0-
CMDI0+
R424
0R_2
R248
0R_2
CN7
RJ45
CMDI1-
CMDI1+
CMDI0-
CMDI0+
MDI3-/NC6
MDI3+/NC5
MDI1-
MDI2-/NC4
MDI2+/NC3
MDI1+
MDI0-
MDI0+
GND
GND
RJ45

Power domain chart

	RTL8111B / RTL8101E	RTL8111C(P)/ RTL8102E
AVDD33	*3.3V*	*3.3V*
AVDD18	*1.8V*	*1.2V*
EVDD18	*1.8V*	*1.2V*
DVDD15	*1.5V*	*1.2V*

Title
<Title>

Size C
Document Number <Doc>
Rev <RevCode>

Date: Monday, April 13, 2009
Sheet 24 of 40

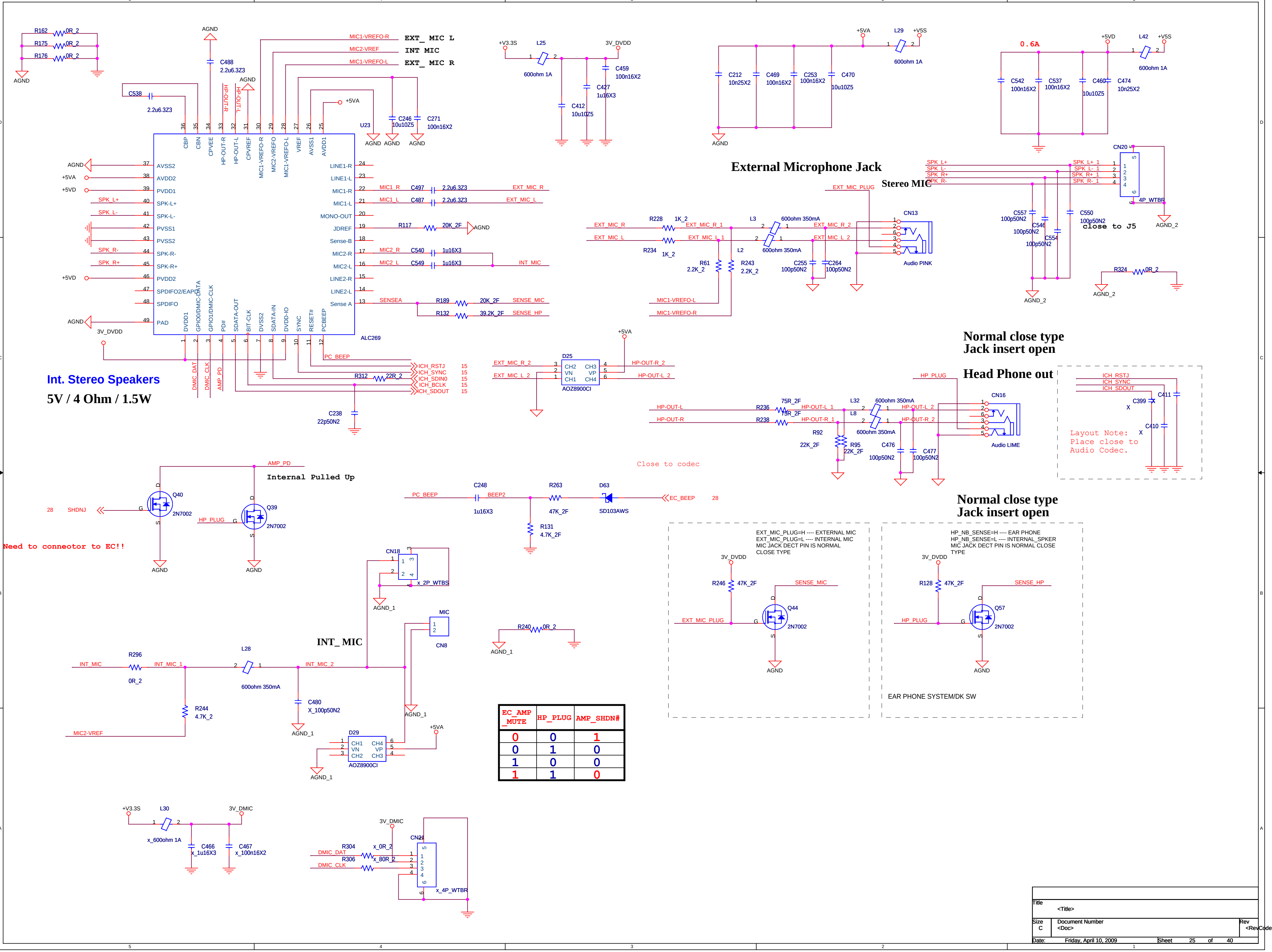
Int. Stereo Speakers
5V / 4 Ohm / 1.5W
External Microphone Jack
Stereo MIC
close to J5
Normal close type
Jack insert open
Head Phone out
Normal close type
Jack insert open
Internal Pulled Up
INT_ MIC
Close to codec
EXT_ MIC L
INT MIC
EXT_ MIC R
MIC1-VREFO-R
MIC2-VREF
MIC1-VREFO-L
U23
ALC269
R162 0R_2
R175 0R_2
R176 0R_2
C488 2.2u6.3Z3
C538 2.2u6.3Z3
C246 10u10Z5
C271 100n16X2
+5VA
+5VD
+V3.3S
3V_DVDD
AGND
AGND_1
AGND_2
L25 600ohm 1A
C459 100n16X2
C427 1u16X3
C412 10u10Z5
L29 600ohm 1A
+V5S
C212 10n25X2
C469 100n16X2
C253 100n16X2
C470 10u10Z5
0.6A
L42 600ohm 1A
C542 100n16X2
C537 100n16X2
C460 10u10Z5
C474 10n25X2
CN20 4P_WTBR
SPK_L+
SPK_L-
SPK_R+
SPK_R-
C557 100p50N2
C546 100p50N2
C554 100p50N2
C550 100p50N2
R324 0R_2
CBP
CBN
CPVEE
HP-OUT-R
HP-OUT-L
CPVREF
MIC1-VREFO-R
MIC2-VREFO
MIC1-VREFO-L
VREF
AVSS1
AVDD1
AVSS2
AVDD2
PVDD1
SPK-L+
SPK-L-
PVSS1
PVSS2
SPK-R-
SPK-R+
PVDD2
SPDIFO2/EAPD
SPDIFO
PAD
LINE1-R
LINE1-L
MIC1-R
MIC1-L
MONO-OUT
JDREF
Sense-B
MIC2-R
MIC2-L
LINE2-R
LINE2-L
Sense A
DVDD1
GPIO0/DMIC-DATA
GPIO1/DMIC-CLK
PD#
SDATA-OUT
BIT-CLK
DVSS2
SDATA-IN
DVDD-IO
SYNC
RESET#
PCBEEP
MIC1_R C497 2.2u6.3Z3 EXT_MIC_R
MIC1_L C487 2.2u6.3Z3 EXT_MIC_L
R117 20K_2F
MIC2_R C540 1u16X3
MIC2_L C549 1u16X3 INT_MIC
SENSEA R189 20K_2F SENSE_MIC
R132 39.2K_2F SENSE_HP
PC_BEEP
ICH_RSTJ 15
ICH_SYNC 15
ICH_SDIN0 15
ICH_BCLK 15
ICH_SDOUT 15
R312 22R_2
C238 22p50N2
DMIC_DAT
DMIC_CLK
AMP_PD
R228 1K_2
R234 1K_2
EXT_MIC_R_1
EXT_MIC_L_1
L3 600ohm 350mA
L2 600ohm 350mA
EXT_MIC_R_2
EXT_MIC_L_2
EXT_MIC_PLUG
CN13 Audio PINK
R61 2.2K_2
R243 2.2K_2
C255 100p50N2
C264 100p50N2
MIC1-VREFO-L
MIC1-VREFO-R
D25 AOZ8900CI
CH1 CH2 CH3 CH4 VN VP
HP-OUT-R_2
HP-OUT-L_2
HP_PLUG
HP-OUT-L
HP-OUT-R
R236 75R_2F
R238 75R_2F
HP-OUT-L_1
HP-OUT-R_1
L32 600ohm 350mA
L8 600ohm 350mA
CN16 Audio LIME
R92 22K_2F
R95 22K_2F
C476 100p50N2
C477 100p50N2
ICH_RSTJ
ICH_SYNC
ICH_SDOUT
C399 X
C410 X
C411
AMP_PD
Q40 2N7002
Q39 2N7002
28 SHDNJ
HP_PLUG
C248 1u16X3
PC_BEEP BEEP2
R263 47K_2F
D63 SD103AWS
EC_BEEP 28
R131 4.7K_2F
CN18 x_2P_WTBS
MIC CN8
R240 0R_2
R296 0R_2
INT_MIC INT_MIC_1
L28 600ohm 350mA
INT_MIC_2
R244 4.7K_2
C480 X_100p50N2
MIC2-VREF
D29 AOZ8900CI
+V3.3S L30 x_600ohm 1A 3V_DMIC
C466 x_1u16X3
C467 x_100n16X2
3V_DMIC
R304 x_0R_2
R306 x_80R_2
DMIC_DAT
DMIC_CLK
CN21 x_4P_WTBR
3V_DVDD
R246 47K_2F
SENSE_MIC
EXT_MIC_PLUG
Q44 2N7002
R128 47K_2F
SENSE_HP
HP_PLUG
Q57 2N7002
5 4 3 2 1
D C B A

Need to conneotor to EC!!

Layout Note:
Place close to
Audio Codec.

EXT_MIC_PLUG=H ---- EXTERNAL MIC
EXT_MIC_PLUG=L ---- INTERNAL MIC
MIC JACK DECT PIN IS NORMAL
CLOSE TYPE

HP_NB_SENSE=H ---- EAR PHONE
HP_NB_SENSE=L ---- INTERNAL_SPKER
MIC JACK DECT PIN IS NORMAL CLOSE
TYPE

EAR PHONE SYSTEM/DK SW

EC_AMP _MUTE	HP_PLUG	AMP_SHDN#
0	0	1
0	1	0
1	0	0
1	1	0

Title
<Title>

Size C
Document Number
<Doc>
Rev
<RevCode>

Date: Friday, April 10, 2009
Sheet 25 of 40

Blue tooth

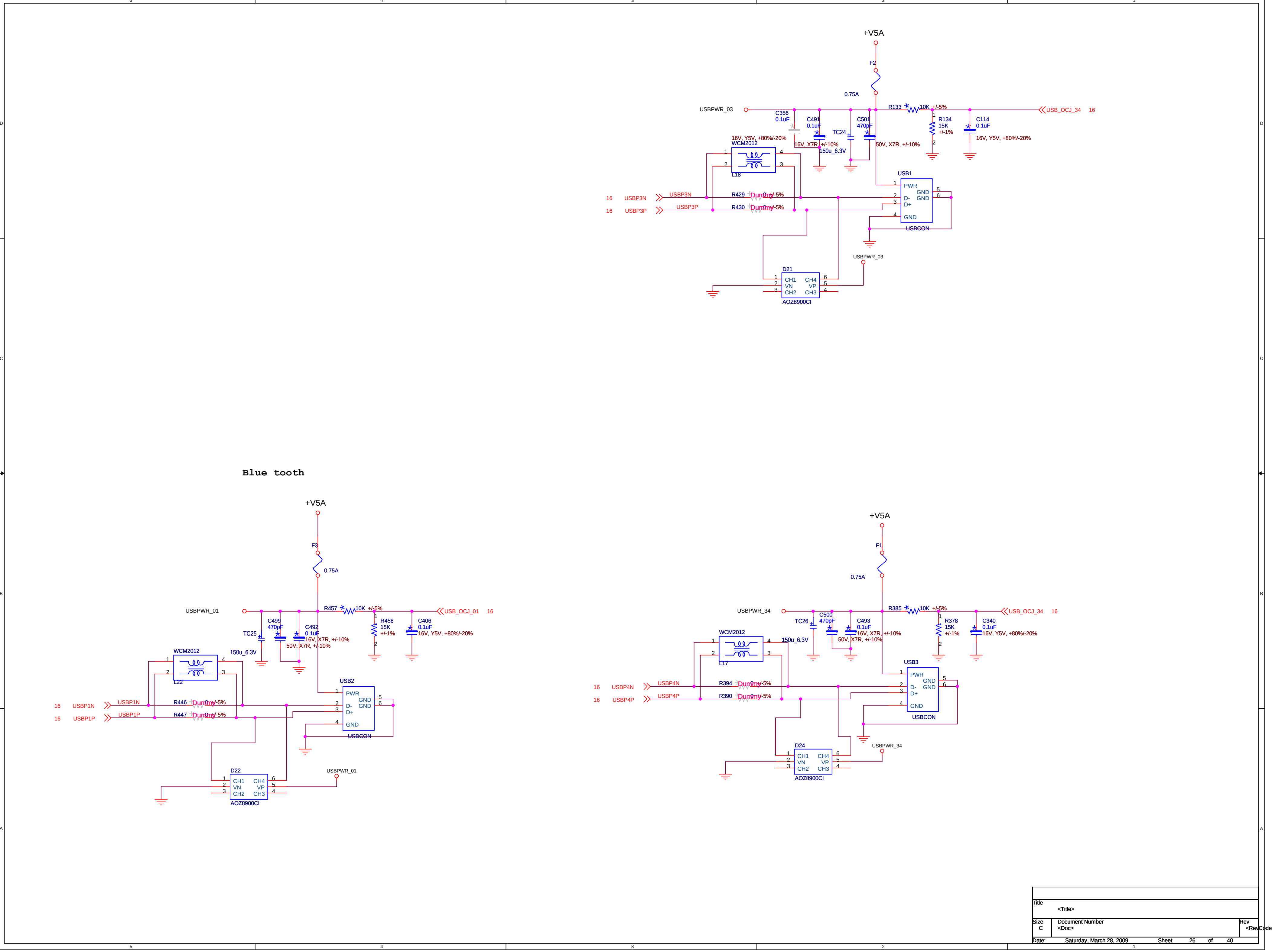
+V5A
F2
0.75A
USBPWR_03
C356
0.1uF
C491
0.1uF
TC24
C501
470pF
R133
10K
+/-5%
R134
15K
+/-1%
C114
0.1uF
USB_OCJ_34
16
16V, Y5V, +80%/-20%
16V, X7R, +/-10%
150u_6.3V
50V, X7R, +/-10%
WCM2012
L18
USB1
PWR
GND
D-
D+
USBCON
16 USBP3N
16 USBP3P
USBP3N
USBP3P
R429 Dummy +/-5%
R430 Dummy +/-5%
D21
CH1 CH4
VN VP
CH2 CH3
AOZ8900CI
USBPWR_03
+V5A
F3
0.75A
USBPWR_01
R457
10K +/-5%
R458
15K
+/-1%
C499
470pF
C492
0.1uF
C406
0.1uF
TC25
150u_6.3V
16V, X7R, +/-10%
50V, X7R, +/-10%
16V, Y5V, +80%/-20%
USB_OCJ_01
WCM2012
L22
USB2
PWR
GND
D-
D+
USBCON
16 USBP1N
16 USBP1P
USBP1N
USBP1P
R446 Dummy +/-5%
R447 Dummy +/-5%
D22
CH1 CH4
VN VP
CH2 CH3
AOZ8900CI
USBPWR_01
+V5A
F1
0.75A
USBPWR_34
R385
10K +/-5%
R378
15K
+/-1%
TC26
C500
470pF
C493
0.1uF
C340
0.1uF
150u_6.3V
16V, X7R, +/-10%
50V, X7R, +/-10%
16V, Y5V, +80%/-20%
USB_OCJ_34
WCM2012
L17
USB3
PWR
GND
D-
D+
USBCON
16 USBP4N
16 USBP4P
USBP4N
USBP4P
R394 Dummy +/-5%
R390 Dummy +/-5%
D24
CH1 CH4
VN VP
CH2 CH3
AOZ8900CI
USBPWR_34
5
4
3
2
1
D
C
B
A

Title
<Title>

Size C
Document Number <Doc>
Rev <RevCode>

Date: Saturday, March 28, 2009
Sheet 26 of 40

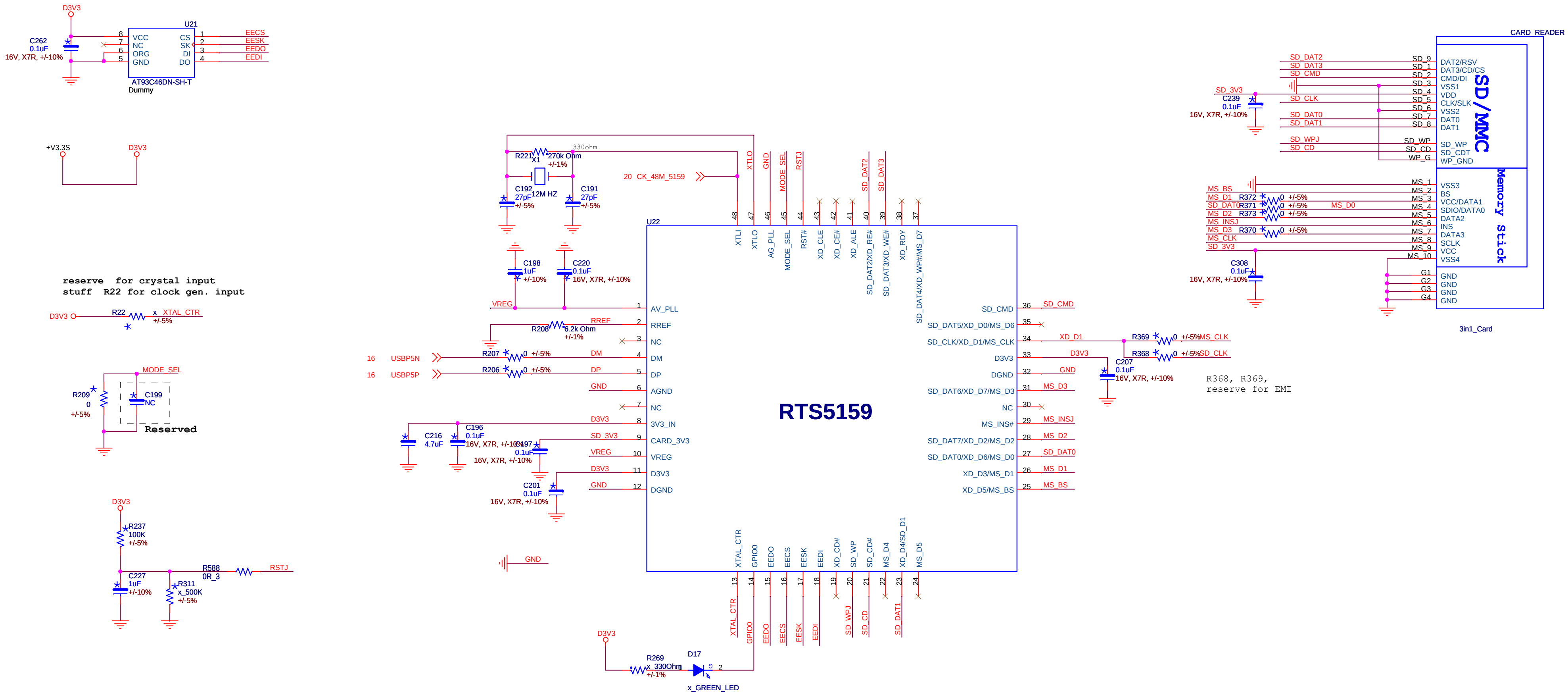
D3V3
C262
0.1uF
16V, X7R, +/-10%
U21
VCC
NC
ORG
GND
CS
SK
DI
DO
8
7
6
5
1
2
3
4
EECS
EESK
EEDO
EEDI
AT93C46DN-SH-T
Dummy
+V3.3S
D3V3
D3V3
R22
x XTAL_CTR
+/-5%
MODE_SEL
R209
0
+/-5%
C199
NC
D3V3
R237
100K
+/-5%
C227
1uF
+/-10%
R311
x_500K
+/-5%
R588
0R_3
RSTJ
330ohm
R221
X1
270k Ohm
+/-1%
12M HZ
C192
27pF
+/-5%
C191
27pF
+/-5%
20 CK_48M_5159
XTLO
GND
MODE_SEL
RSTJ
SD_DAT2
SD_DAT3
C198
1uF
+/-10%
C220
0.1uF
16V, X7R, +/-10%
VREG
RREF
R208
6.2k Ohm
+/-1%
16 USBP5N
16 USBP5P
R207
0 +/-5%
R206
0 +/-5%
DM
DP
GND
D3V3
SD_3V3
VREG
D3V3
GND
C216
4.7uF
C196
0.1uF
16V, X7R, +/-10%
C197
0.1uF
16V, X7R, +/-10%
C201
0.1uF
16V, X7R, +/-10%
GND
U22
RTS5159
1 AV_PLL
2 RREF
3 NC
4 DM
5 DP
6 AGND
7 NC
8 3V3_IN
9 CARD_3V3
10 VREG
11 D3V3
12 DGND
48 XTLI
47 XTLO
46 AG_PLL
45 MODE_SEL
44 RST#
43 XD_CLE
42 XD_CE#
41 XD_ALE
40 SD_DAT2/XD_RE#
39 SD_DAT3/XD_WE#
38 XD_RDY
37 SD_DAT4/XD_WP#/MS_D7
36 SD_CMD
35 SD_DAT5/XD_D0/MS_D6
34 SD_CLK/XD_D1/MS_CLK
33 D3V3
32 DGND
31 SD_DAT6/XD_D7/MS_D3
30 NC
29 MS_INS#
28 SD_DAT7/XD_D2/MS_D2
27 SD_DAT0/XD_D6/MS_D0
26 XD_D3/MS_D1
25 XD_D5/MS_BS
13 XTAL_CTR
14 GPIO0
15 EEDO
16 EECS
17 EESK
18 EEDI
19 XD_CD#
20 SD_WP
21 SD_CD#
22 MS_D4
23 XD_D4/SD_D1
24 MS_D5
SD_CMD
XD_D1
D3V3
GND
MS_D3
MS_INSJ
MS_D2
SD_DAT0
MS_D1
MS_BS
C207
0.1uF
16V, X7R, +/-10%
R369
0 +/-5%
MS_CLK
R368
0 +/-5%
SD_CLK
XTAL_CTR
GPIO0
EEDO
EECS
EESK
EEDI
SD_WPJ
SD_CD
SD_DAT1
D3V3
R269
x_330Ohm
+/-1%
D17
x_GREEN_LED
CARD_READER
SD_DAT2
SD_DAT3
SD_CMD
SD_3V3
C239
0.1uF
16V, X7R, +/-10%
SD_CLK
SD_DAT0
SD_DAT1
SD_WPJ
SD_CD
SD_9
SD_1
SD_2
SD_3
SD_4
SD_5
SD_6
SD_7
SD_8
SD_WP
SD_CD
WP_G
DAT2/RSV
DAT3/CD/CS
CMD/DI
VSS1
VDD
CLK/SLK
VSS2
DAT0
DAT1
SD_WP
SD_CDT
WP_GND
SD/MMC
MS_BS
MS_D1
SD_DAT0
MS_D2
MS_INSJ
MS_D3
MS_CLK
SD_3V3
R372
R371
R373
R370
0 +/-5%
MS_D0
MS_1
MS_2
MS_3
MS_4
MS_5
MS_6
MS_7
MS_8
MS_9
MS_10
VSS3
BS
VCC/DATA1
SDIO/DATA0
DATA2
INS
DATA3
SCLK
VCC
VSS4
Memory Stick
C308
0.1uF
16V, X7R, +/-10%
G1
G2
G3
G4
GND
GND
GND
GND
3in1_Card

reserve for crystal input
stuff R22 for clock gen. input

Reserved

R368, R369,
reserve for EMI

Title
<Title>

Size C
Document Number
<Doc>
Rev
<RevCode>

Date: Thursday, April 16, 2009
Sheet 27 of 40

Note 1 : Since all GPIO belong to VSTBY power domain, and
there are some special considerations below:
(1) If it is output to external VCC derived power domain
circuit, this signal should be isolated by a diode such as
KBRST# and GA20.
(2) If it is input from external VCC derived power domain
circuit, this external circuit must consider not to float
the GPIO input.
Note 2 :
(1) Each input pin should be driven or pulled.
(2) Each output-drain output pin should be pulled.

ITE confirm why there is no LDRQ

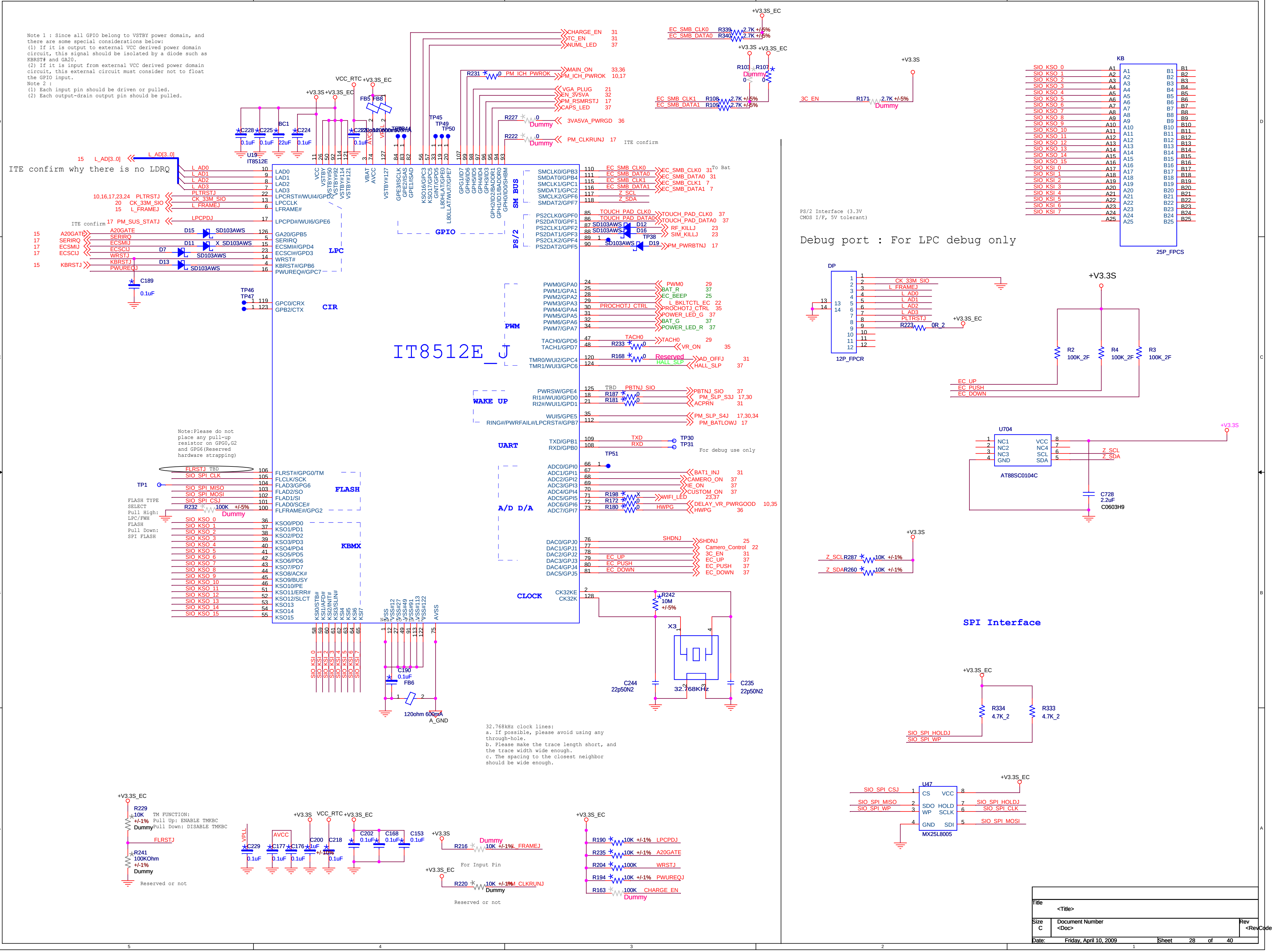
IT8512E_J
U19
IT8512E
LPC
GPIO
SM BUS
PS/2
PWM
CIR
WAKE UP
UART
FLASH
KBMX
A/D D/A
CLOCK
ITE confirm
To Bat
For debug use only
TP1
TP30
TP31
TP51
X3
32.768KHz
C244 22p50N2
C235 22p50N2
R242 10M +/-5%
FB5 FB8
FB6 120ohm 600mA
A_GND
VCC_RTC
+V3.3S
+V3.3S_EC
KB
25P_FPCS
DP
12P_FPCR
U704
AT88SC0104C
C728 2.2uF C0603H9
U47
MX25L8005
R2 100K_2F
R4 100K_2F
R3 100K_2F
R334 4.7K_2
R333 4.7K_2
Dummy

Note:Please do not
place any pull-up
resistor on GPG0,G2
and GPG6(Reserved
hardware strapping)

FLASH TYPE
SELECT
Pull High:
LPC/FWH
FLASH
Pull Down:
SPI FLASH

PS/2 Interface (3.3V
CMOS I/F, 5V tolerant)

Debug port : For LPC debug only

SPI Interface

32.768kHz clock lines:
a. If possible, please avoid using any
through-hole.
b. Please make the trace length short, and
the trace width wide enough.
c. The spacing to the closest neighbor
should be wide enough.

TM FUNCTION:
Pull Up: ENABLE TMKBC
Pull Down: DISABLE TMKBC

Reserved or not

For Input Pin

Reserved or not

Title
<Title>

Size C
Document Number
<Doc>
Rev
<RevCode>

Date: Friday, April 10, 2009
Sheet 28 of 40

PWM

Fan Control

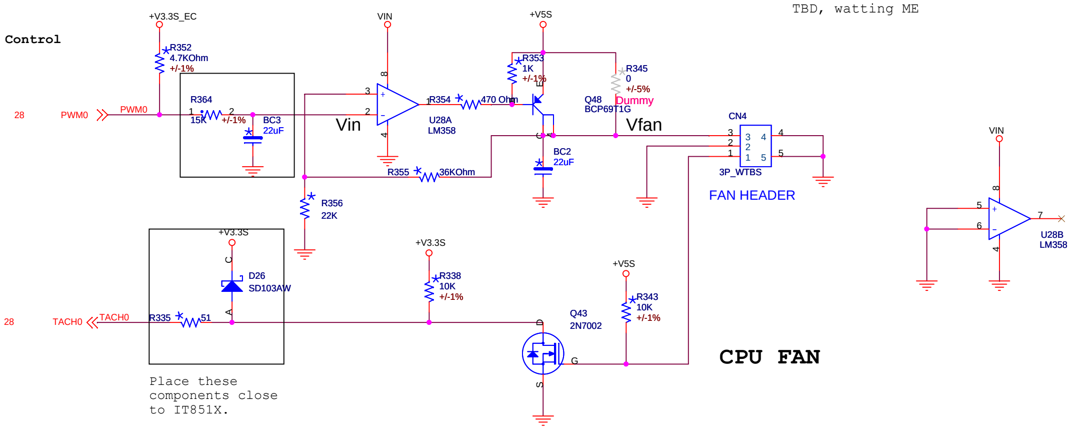
28
PWM0
PWM0
+V3.3S_EC
R352
4.7KOhm
+/-1%
R364
1
2
15K
+/-1%
BC3
22uF
VIN
3
2
8
4
Vin
R354
470 Ohm
U28A
LM358
R355
36KOhm
R356
22K
+V5S
R353
1K
+/-1%
E
B
C
Q48
BCP69T1G
R345
0
+/-5%
Dummy
BC2
22uF
Vfan
CN4
3
2
1
4
5
3P_WTBS
FAN HEADER
VIN
5
6
8
4
7
U28B
LM358
+V3.3S
C
D26
SD103AW
A
28
TACH0
TACH0
R335
51
+V3.3S
R338
10K
+/-1%
+V5S
R343
10K
+/-1%
D
Q43
2N7002
G
S
CPU FAN

TBD, watting ME

Place these components close to IT851X.

Title
<Title>
Size
C
Document Number
<Doc>
Rev
<RevCode>
Date: Saturday, March 28, 2009
Sheet 29 of 40

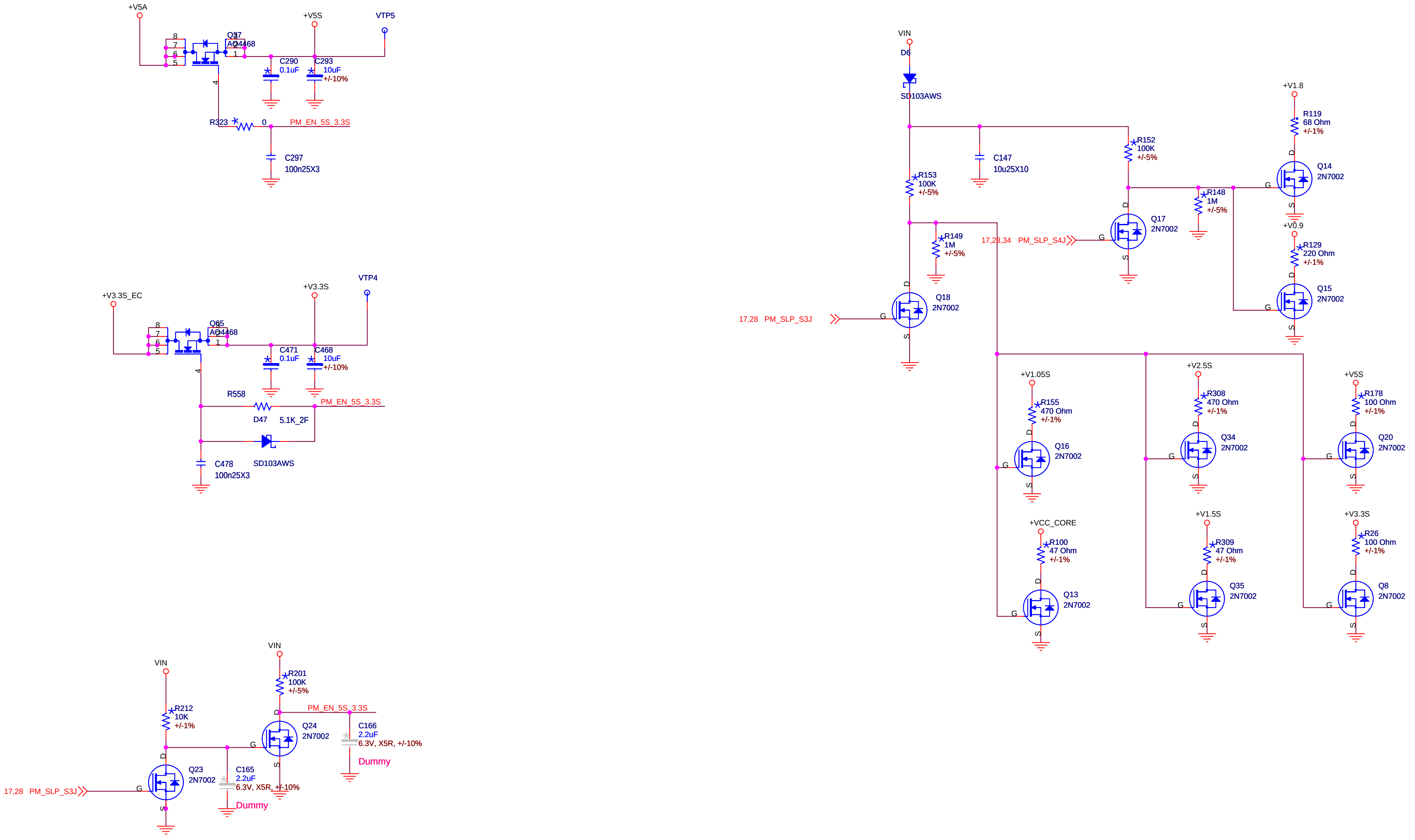
+V5A
Q37
AO4468
8
7
6
5
4
1
+V5S
VTP5
C290
0.1uF
C293
10uF
+/-10%
R323
0
PM_EN_5S_3.3S
C297
100n25X3
+V3.3S_EC
Q65
AO4468
+V3.3S
VTP4
C471
0.1uF
C468
10uF
+/-10%
R558
PM_EN_5S_3.3S
D47
5.1K_2F
SD103AWS
C478
100n25X3
VIN
D6
SD103AWS
C147
10u25X10
R152
100K
+/-5%
R153
100K
+/-5%
R149
1M
+/-5%
Q18
2N7002
17,28 PM_SLP_S3J
Q17
2N7002
17,28,34 PM_SLP_S4J
R148
1M
+/-5%
+V1.8
R119
68 Ohm
+/-1%
Q14
2N7002
+V0.9
R129
220 Ohm
+/-1%
Q15
2N7002
+V1.05S
R155
470 Ohm
+/-1%
Q16
2N7002
+V2.5S
R308
470 Ohm
+/-1%
Q34
2N7002
+V5S
R178
100 Ohm
+/-1%
Q20
2N7002
+VCC_CORE
R100
47 Ohm
+/-1%
Q13
2N7002
+V1.5S
R309
47 Ohm
+/-1%
Q35
2N7002
+V3.3S
R26
100 Ohm
+/-1%
Q8
2N7002
G
D
S
VIN
R212
10K
+/-1%
Q23
2N7002
17,28 PM_SLP_S3J
C165
2.2uF
6.3V, X5R, +/-10%
Dummy
VIN
R201
100K
+/-5%
Q24
2N7002
PM_EN_5S_3.3S
C166
2.2uF
6.3V, X5R, +/-10%
Dummy

Title
<Title>

Size C
Document Number
<Doc>
Rev
<RevCode>

Date: Saturday, March 28, 2009 Sheet 30 of 40

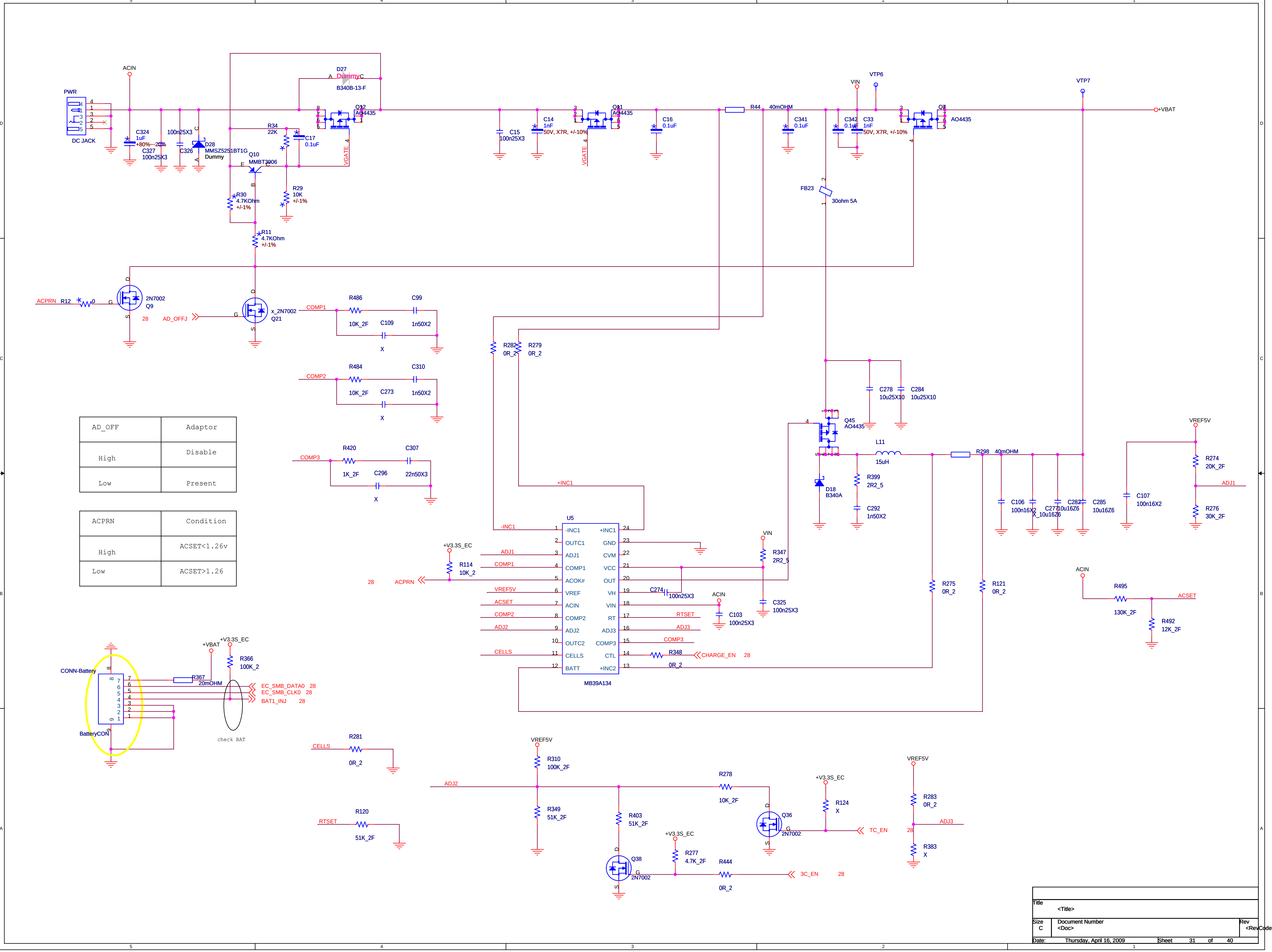

PWR
DC JACK
ACIN
C324
1uF
+80%~-20%
C327
100n25X3
100n25X3
C326
D28
MMSZ5251BT1G
Dummy
R34
22K
C17
0.1uF
Q10
MMBT3906
R29
10K
+/-1%
R30
4.7KOhm
+/-1%
R11
4.7KOhm
+/-1%
D27
Dummy
B340B-13-F
Q12
AO4435
VGATE
C15
100n25X3
C14
1nF
50V, X7R, +/-10%
Q11
AO4435
C16
0.1uF
R44
40mOHM
C341
0.1uF
VIN
VTP6
C342
0.1uF
C33
1nF
50V, X7R, +/-10%
Q7
AO4435
VTP7
+VBAT
FB23
30ohm 5A
ACPRN
R12
Q9
2N7002
28
AD_OFFJ
Q21
x_2N7002
COMP1
R486
10K_2F
C99
1n50X2
C109
X
COMP2
R484
10K_2F
C310
1n50X2
C273
X
COMP3
R420
1K_2F
C307
22n50X3
C296
X
R282
0R_2
R279
0R_2
+INC1
-INC1
C278
10u25X10
C284
10u25X10
Q45
AO4435
L11
15uH
R298
40mOHM
D18
B340A
R399
2R2_5
C292
1n50X2
C106
100n16X2
C277
X_10u16Z6
C282
10u16Z6
C285
10u16Z6
C107
100n16X2
VREF5V
R274
20K_2F
ADJ1
R276
30K_2F
U5
MB39A134
-INC1
OUTC1
ADJ1
COMP1
ACOK#
VREF
ACIN
COMP2
ADJ2
OUTC2
CELLS
BATT
+INC1
GND
CVM
VCC
OUT
VH
VIN
RT
ADJ3
COMP3
CTL
+INC2
+V3.3S_EC
R114
10K_2
ACPRN
28
VREF5V
ACSET
COMP2
ADJ2
CELLS
VIN
R347
2R2_5
C274
100n25X3
ACIN
C103
100n25X3
C325
100n25X3
RTSET
ADJ3
COMP3
R348
0R_2
CHARGE_EN
28
R275
0R_2
R121
0R_2
ACIN
R495
130K_2F
ACSET
R492
12K_2F
CONN-Battery
BatteryCON
+VBAT
+V3.3S_EC
R366
100K_2
R367
20mOHM
EC_SMB_DATA0 28
EC_SMB_CLK0 28
BAT1_INJ 28
check BAT
R281
CELLS
0R_2
VREF5V
R310
100K_2F
ADJ2
R349
51K_2F
R403
51K_2F
R278
10K_2F
Q36
2N7002
+V3.3S_EC
R124
X
TC_EN
28
VREF5V
R283
0R_2
ADJ3
R383
X
R120
RTSET
51K_2F
Q38
2N7002
+V3.3S_EC
R277
4.7K_2F
R444
0R_2
3C_EN
28
5
4
3
2
1
D
C
B
A

AD_OFF	Adaptor
High	Disable
Low	Present

ACPRN	Condition
High	ACSET<1.26v
Low	ACSET>1.26

Title
<Title>

Size C
Document Number
<Doc>
Rev
<RevCode>

Date: Thursday, April 16, 2009
Sheet 31 of 40

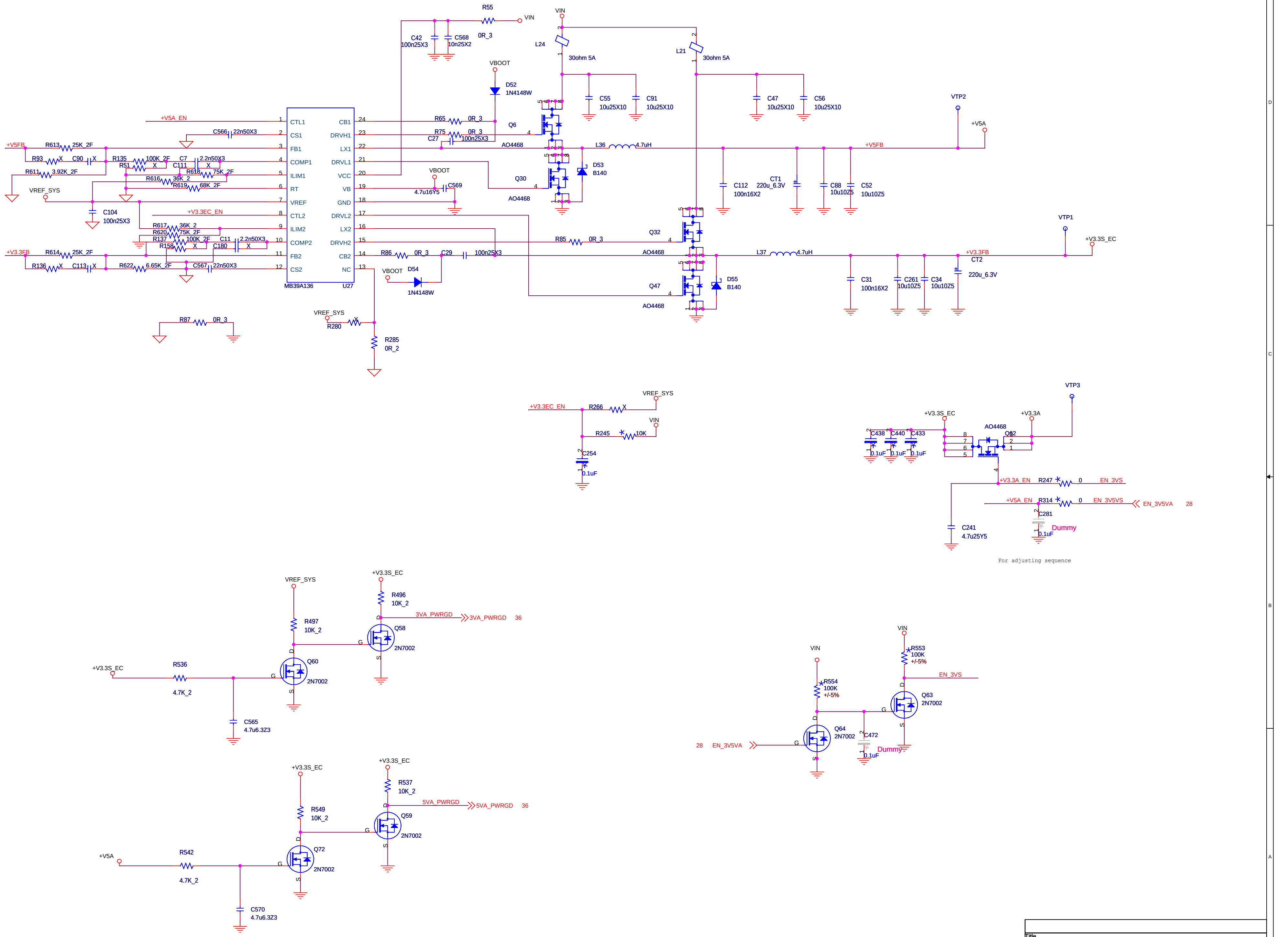
R55
0R_3
VIN
C42
100n25X3
C568
10n25X2
VBOOT
D52
1N4148W
L24
30ohm 5A
L21
30ohm 5A
C55
10u25X10
C91
10u25X10
C47
10u25X10
C56
10u25X10
VTP2
+V5A
+V5A_EN
CTL1
CS1
FB1
COMP1
ILIM1
RT
VREF
CTL2
ILIM2
COMP2
FB2
CS2
CB1
DRVH1
LX1
DRVL1
VCC
VB
GND
DRVL2
LX2
DRVH2
CB2
NC
MB39A136
U27
C566
22n50X3
+V5FB
R613
25K_2F
R93
X
C90
X
R135
100K_2F
C7
2.2n50X3
R51
X
C111
X
R611
3.92K_2F
R618
75K_2F
R616
36K_2
R619
68K_2F
VREF_SYS
C104
100n25X3
+V3.3EC_EN
R617
36K_2
R620
75K_2F
R137
100K_2F
C11
2.2n50X3
R158
X
C180
X
+V3.3FB
R614
25K_2F
R136
X
C113
X
R622
6.65K_2F
C567
22n50X3
R65
0R_3
R75
0R_3
C27
100n25X3
Q6
AO4468
L36
4.7uH
+V5FB
D53
B140
Q30
AO4468
VBOOT
C569
4.7u16Y5
C112
100n16X2
CT1
220u_6.3V
C88
10u10Z5
C52
10u10Z5
VTP1
+V3.3S_EC
Q32
AO4468
R85
0R_3
R86
0R_3
C29
100n25X3
L37
4.7uH
+V3.3FB
CT2
220u_6.3V
VBOOT
D54
1N4148W
D55
B140
Q47
AO4468
C31
100n16X2
C261
10u10Z5
C34
10u10Z5
R87
0R_3
VREF_SYS
R280
R285
0R_2
VREF_SYS
+V3.3EC_EN
R266
X
VIN
R245
10K
C254
0.1uF
VTP3
+V3.3S_EC
+V3.3A
AO4468
Q62
C438
0.1uF
C440
0.1uF
C433
0.1uF
+V3.3A_EN
R247
0
EN_3VS
+V5A_EN
R314
0
EN_3V5VS
EN_3V5VA
28
C281
0.1uF
Dummy
C241
4.7u25Y5
For adjusting sequence
VREF_SYS
R497
10K_2
+V3.3S_EC
R496
10K_2
3VA_PWRGD
3VA_PWRGD
36
Q58
2N7002
Q60
2N7002
+V3.3S_EC
R536
4.7K_2
C565
4.7u6.3Z3
VIN
R553
100K
+/-5%
EN_3VS
Q63
2N7002
VIN
R554
100K
+/-5%
Q64
2N7002
C472
0.1uF
Dummy
28
EN_3V5VA
+V3.3S_EC
R549
10K_2
+V3.3S_EC
R537
10K_2
5VA_PWRGD
5VA_PWRGD
36
Q59
2N7002
Q72
2N7002
+V5A
R542
4.7K_2
C570
4.7u6.3Z3

Title
<Title>
Size C
Document Number
<Doc>
Rev
<RevCode>
Date: Wednesday, April 15, 2009
Sheet 32 of 40

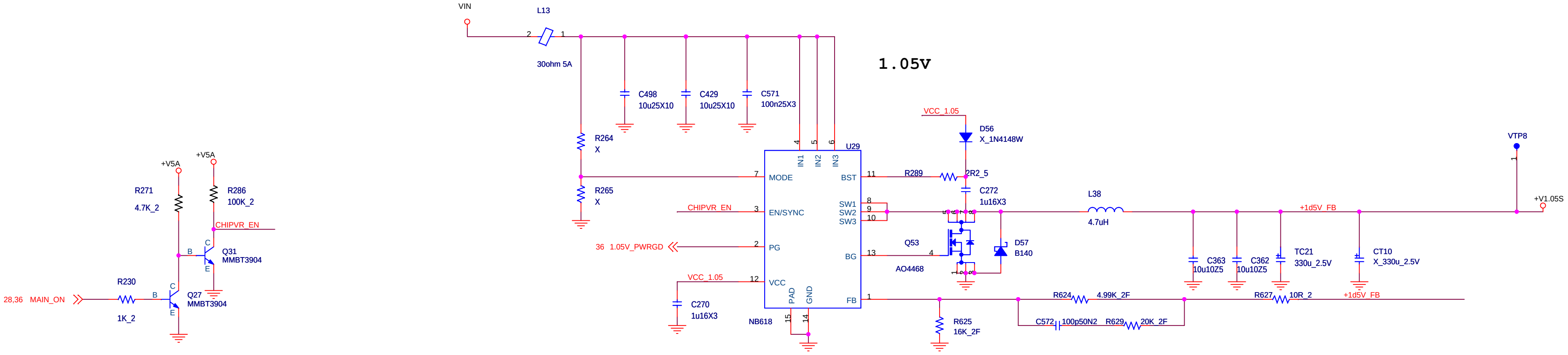
VIN
L13
2
1
30ohm 5A
C498
10u25X10
C429
10u25X10
C571
100n25X3
1.05V
R264
X
R265
X
VCC_1.05
D56
X_1N4148W
VTP8
+V5A
+V5A
R271
4.7K_2
R286
100K_2
CHIPVR_EN
C
B
E
Q31
MMBT3904
R230
1K_2
28,36 MAIN_ON
B
C
E
Q27
MMBT3904
U29
IN1
IN2
IN3
4
5
6
7
MODE
BST
11
R289
2R2_5
C272
1u16X3
CHIPVR_EN
3
EN/SYNC
SW1
SW2
SW3
8
9
10
L38
4.7uH
+1d5V_FB
+V1.05S
36 1.05V_PWRGD
2
PG
BG
13
Q53
4
AO4468
D57
B140
C363
10u10Z5
C362
10u10Z5
TC21
330u_2.5V
CT10
X_330u_2.5V
VCC_1.05
12
VCC
PAD
GND
FB
1
C270
1u16X3
NB618
15
14
R625
16K_2F
R624
4.99K_2F
C572
100p50N2
R629
20K_2F
R627
10R_2
+1d5V_FB

Title	<Title>
Size C	Document Number <Doc>
Rev	<RevCode>
Date:	Saturday, March 28, 2009
Sheet	33 of 40

1.8V

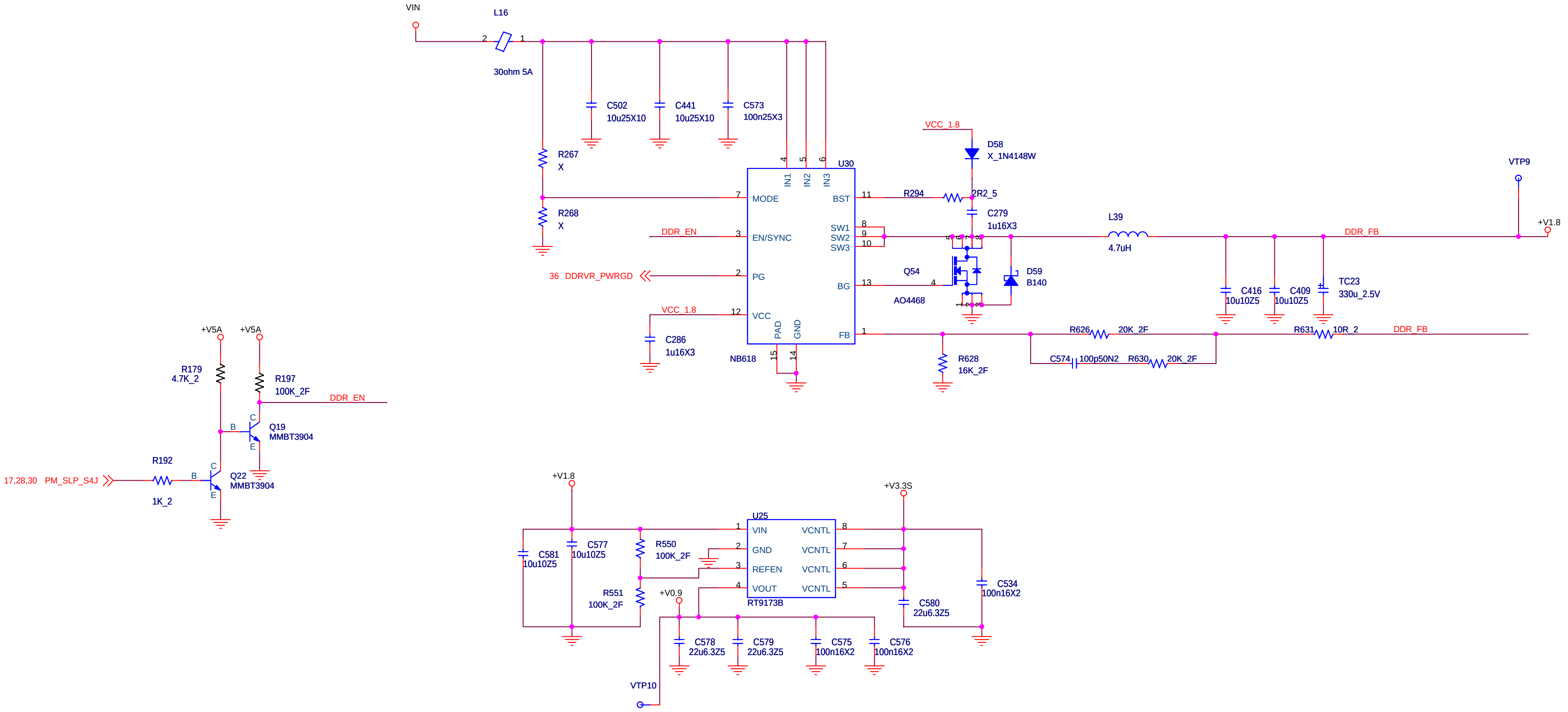
VIN
L16
2
1
30ohm 5A
C502
10u25X10
C441
10u25X10
C573
100n25X3
R267
X
R268
X
4
5
6
IN1
IN2
IN3
U30
MODE
7
DDR_EN
3
EN/SYNC
36 DDRVR_PWRGD
2
PG
VCC_1.8
12
VCC
C286
1u16X3
NB618
15
14
PAD
GND
BST
11
SW1
SW2
SW3
8
9
10
BG
13
FB
1
R294
2R2_5
VCC_1.8
D58
X_1N4148W
C279
1u16X3
Q54
4
AO4468
D59
B140
L39
4.7uH
R628
16K_2F
R626
20K_2F
C574
100p50N2
R630
20K_2F
C416
10u10Z5
C409
10u10Z5
TC23
330u_2.5V
DDR_FB
VTP9
+V1.8
R631
10R_2
DDR_FB
+V5A
+V5A
R179
4.7K_2
R197
100K_2F
DDR_EN
B
C
E
Q19
MMBT3904
R192
17,28,30 PM_SLP_S4J
1K_2
B
C
E
Q22
MMBT3904
+V1.8
C581
10u10Z5
C577
10u10Z5
R550
100K_2F
R551
100K_2F
+V0.9
U25
1
VIN
2
GND
3
REFEN
4
VOUT
RT9173B
VCNTL
VCNTL
VCNTL
VCNTL
8
7
6
5
+V3.3S
C580
22u6.3Z5
C534
100n16X2
C578
22u6.3Z5
C579
22u6.3Z5
C575
100n16X2
C576
100n16X2
VTP10

Title
<Title>

Size C
Document Number
<Doc>
Rev
<RevCode>

Date: Saturday, March 28, 2009 Sheet 34 of 40

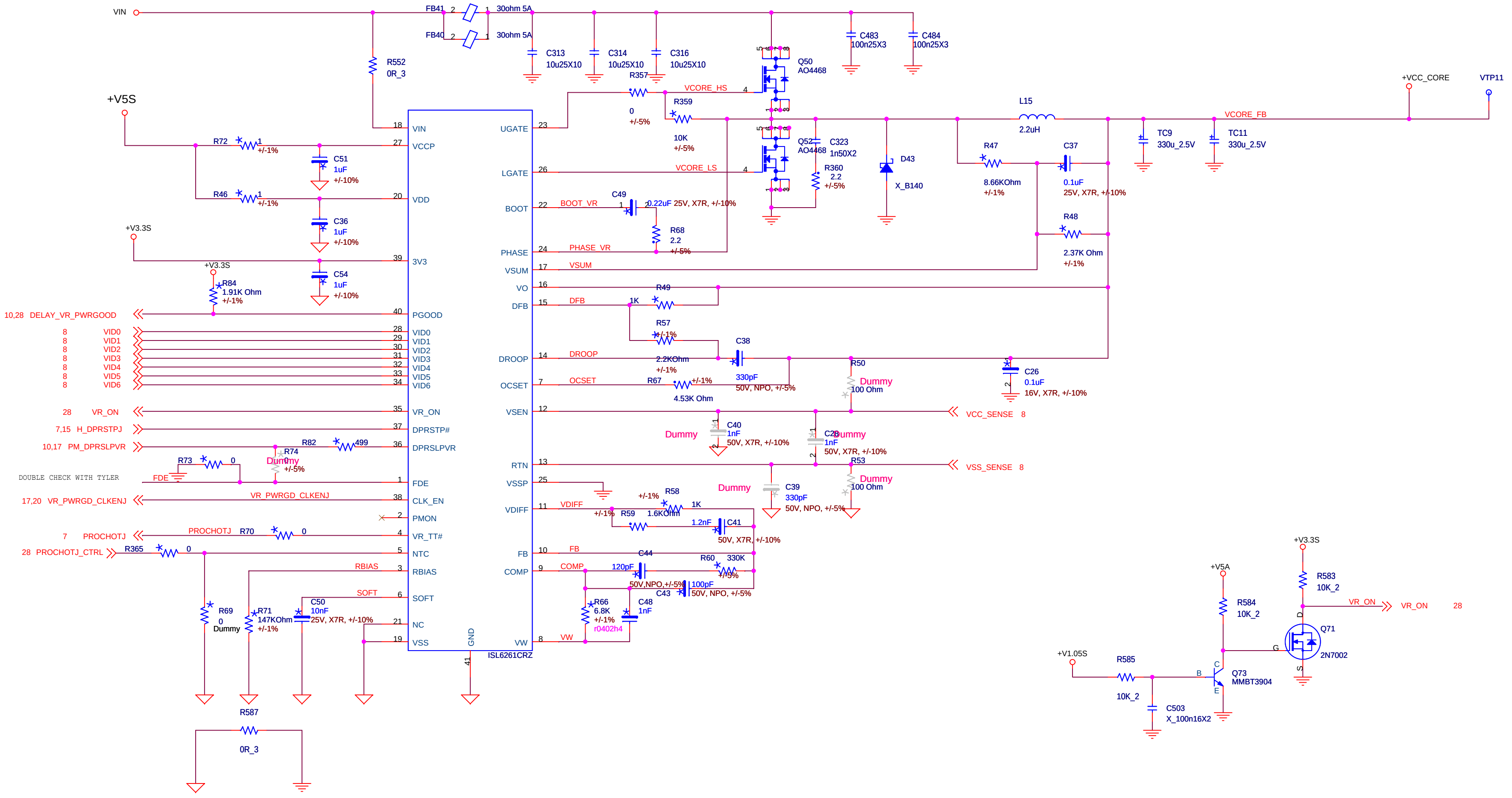
VIN
FB41
30ohm 5A
FB40
30ohm 5A
R552
0R_3
C313
10u25X10
C314
10u25X10
C316
10u25X10
R357
0
+/-5%
R359
10K
+/-5%
VCORE_HS
Q50
AO4468
C483
100n25X3
C484
100n25X3
Q52
AO4468
C323
1n50X2
R360
2.2
+/-5%
D43
X_B140
L15
2.2uH
+VCC_CORE
VTP11
VCORE_FB
TC9
330u_2.5V
TC11
330u_2.5V
R47
8.66KOhm
+/-1%
C37
0.1uF
25V, X7R, +/-10%
R48
2.37K Ohm
+/-1%
+V5S
R72
+/-1%
C51
1uF
+/-10%
R46
+/-1%
C36
1uF
+/-10%
+V3.3S
C54
1uF
+/-10%
+V3.3S
R84
1.91K Ohm
+/-1%
10,28 DELAY_VR_PWRGOOD
8 VID0
8 VID1
8 VID2
8 VID3
8 VID4
8 VID5
8 VID6
28 VR_ON
7,15 H_DPRSTPJ
10,17 PM_DPRSLPVR
R82
499
R74
Dummy
+/-5%
R73
0
DOUBLE CHECK WITH TYLER
FDE
17,20 VR_PWRGD_CLKENJ
VR_PWRGD_CLKENJ
7 PROCHOTJ
PROCHOTJ
R70
0
28 PROCHOTJ_CTRL
R365
0
RBIAS
SOFT
R69
0
Dummy
R71
147KOhm
+/-1%
C50
10nF
25V, X7R, +/-10%
R587
0R_3
18 VIN
27 VCCP
20 VDD
39 3V3
40 PGOOD
28 VID0
29 VID1
30 VID2
31 VID3
32 VID4
33 VID5
34 VID6
35 VR_ON
37 DPRSTP#
36 DPRSLPVR
1 FDE
38 CLK_EN
2 PMON
4 VR_TT#
5 NTC
3 RBIAS
6 SOFT
21 NC
19 VSS
GND
41
ISL6261CRZ
UGATE 23
LGATE 26
BOOT 22
PHASE 24
VSUM 17
VO 16
DFB 15
DROOP 14
OCSET 7
VSEN 12
RTN 13
VSSP 25
VDIFF 11
FB 10
COMP 9
VW 8
VCORE_LS
BOOT_VR
C49
0.22uF 25V, X7R, +/-10%
R68
2.2
+/-5%
PHASE_VR
VSUM
R49
1K
DFB
R57
+/-1%
2.2KOhm
+/-1%
C38
330pF
50V, NPO, +/-5%
DROOP
R50
Dummy
100 Ohm
C26
0.1uF
16V, X7R, +/-10%
OCSET
R67
+/-1%
4.53K Ohm
VCC_SENSE 8
C40
1nF
50V, X7R, +/-10%
Dummy
C29
1nF
Dummy
50V, X7R, +/-10%
R53
VSS_SENSE 8
Dummy
100 Ohm
C39
330pF
50V, NPO, +/-5%
Dummy
VDIFF
R58
+/-1%
1K
R59
+/-1%
1.6KOhm
C41
1.2nF
50V, X7R, +/-10%
FB
C44
R60
330K
+/-5%
COMP
120pF
50V,NPO,+/-5%
C43
100pF
50V, NPO, +/-5%
R66
6.8K
+/-1%
r0402h4
C48
1nF
VW
+V3.3S
R583
10K_2
VR_ON
VR_ON 28
+V5A
R584
10K_2
Q71
2N7002
D
G
S
+V1.05S
R585
10K_2
C503
X_100n16X2
Q73
MMBT3904
B
C
E

Title
<Title>

Size	Document Number	Rev
C	<Doc>	<RevCode>

Date: Monday, April 13, 2009 Sheet 35 of 40

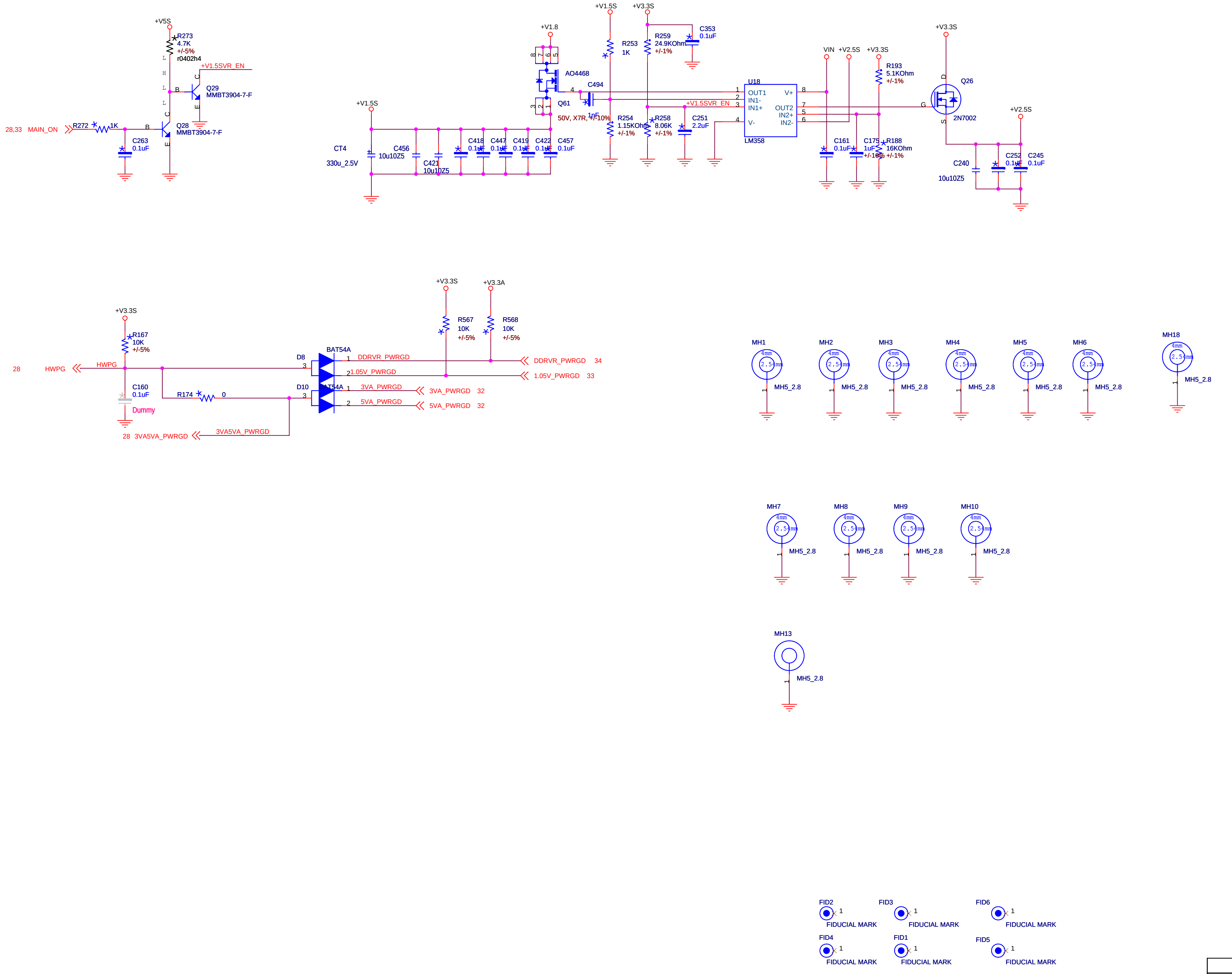

+V5S
R273
4.7K
+/-5%
r0402h4
+V1.5SVR_EN
Q29
MMBT3904-7-F
B
C
E
28,33
MAIN_ON
R272
1K
B
Q28
MMBT3904-7-F
C263
0.1uF
+V1.5S
CT4
330u_2.5V
C456
10u10Z5
C421
10u10Z5
C418
0.1uF
C447
0.1uF
C419
0.1uF
C422
0.1uF
C457
0.1uF
+V1.8
AO4468
Q61
C494
1nF
50V, X7R, +/-10%
+V1.5S
R253
1K
+V3.3S
R259
24.9KOhm
+/-1%
C353
0.1uF
R254
1.15KOhm
+/-1%
R258
8.06K
+/-1%
C251
2.2uF
+V1.5SVR_EN
U18
OUT1
IN1-
IN1+
V-
V+
OUT2
IN2+
IN2-
LM358
VIN
+V2.5S
+V3.3S
R193
5.1KOhm
+/-1%
C161
0.1uF
C175
1uF
+/-10%
R188
16KOhm
+/-1%
+V3.3S
Q26
2N7002
D
G
S
+V2.5S
C240
10u10Z5
C252
0.1uF
C245
0.1uF
+V3.3S
R167
10K
+/-5%
28
HWPG
HWPG
C160
0.1uF
Dummy
R174
0
28 3VA5VA_PWRGD
3VA5VA_PWRGD
D8
BAT54A
D10
BAT54A
DDRVR_PWRGD
1.05V_PWRGD
3VA_PWRGD
5VA_PWRGD
+V3.3S
R567
10K
+/-5%
+V3.3A
R568
10K
+/-5%
DDRVR_PWRGD 34
1.05V_PWRGD 33
3VA_PWRGD 32
5VA_PWRGD 32
MH1
MH2
MH3
MH4
MH5
MH6
MH18
MH5_2.8
4mm
2.5mm
MH7
MH8
MH9
MH10
MH13
FID2
FID3
FID6
FID4
FID1
FID5
FIDUCIAL MARK

Title

<Title>

Size C

Document Number <Doc>

Rev <RevCode>

Date: Saturday, March 28, 2009 Sheet 36 of 40

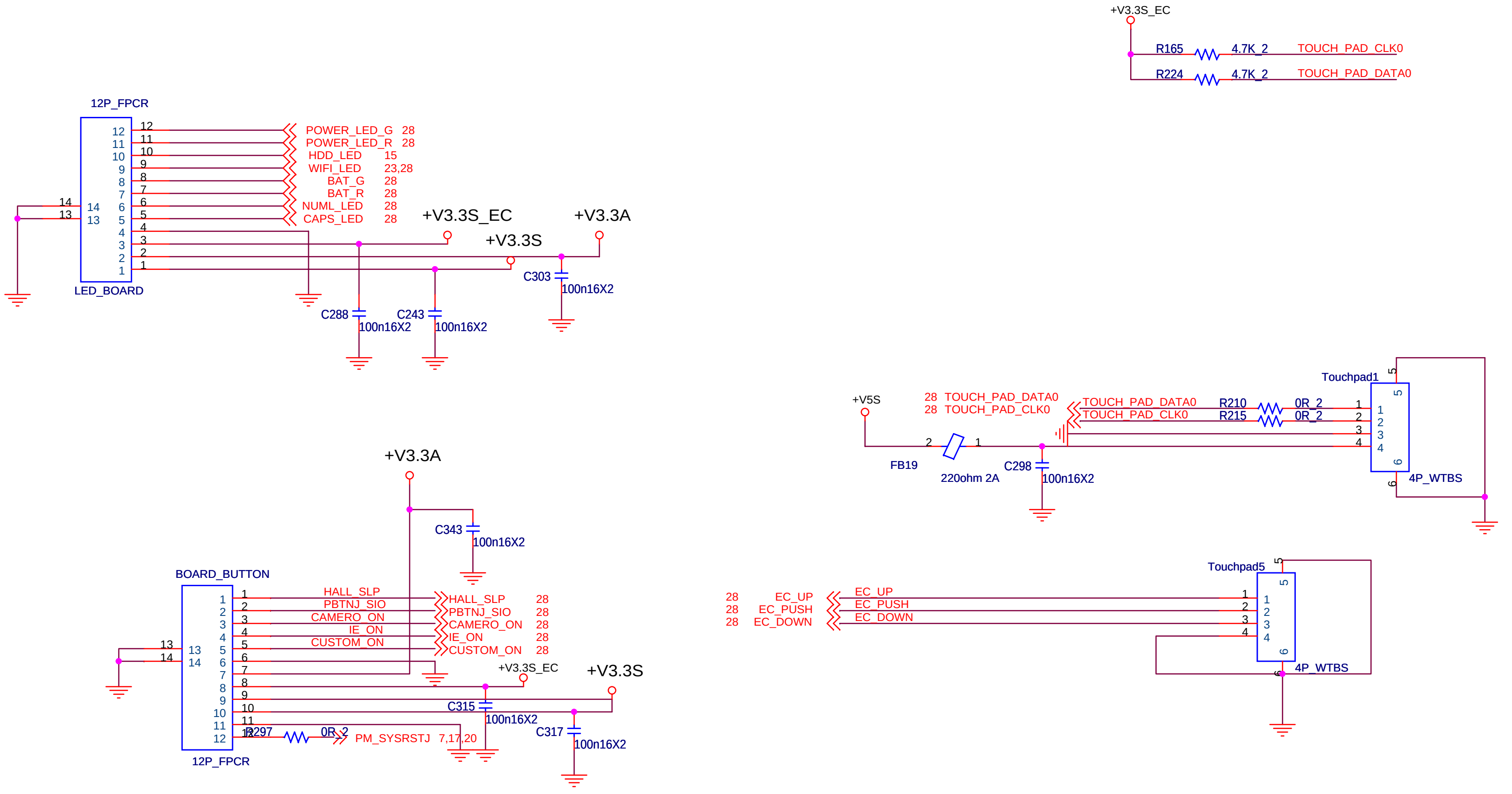
+V3.3S_EC
R165
4.7K_2
TOUCH_PAD_CLK0
R224
4.7K_2
TOUCH_PAD_DATA0
12P_FPCR
LED_BOARD
POWER_LED_G 28
POWER_LED_R 28
HDD_LED 15
WIFI_LED 23,28
BAT_G 28
BAT_R 28
NUML_LED 28
CAPS_LED 28
+V3.3S_EC
+V3.3A
+V3.3S
C303
100n16X2
C288
100n16X2
C243
100n16X2
Touchpad1
+V5S
28 TOUCH_PAD_DATA0
28 TOUCH_PAD_CLK0
TOUCH_PAD_DATA0
TOUCH_PAD_CLK0
R210
0R_2
R215
0R_2
FB19
220ohm 2A
C298
100n16X2
4P_WTBS
+V3.3A
C343
100n16X2
BOARD_BUTTON
HALL_SLP
PBTNJ_SIO
CAMERO_ON
IE_ON
CUSTOM_ON
HALL_SLP 28
PBTNJ_SIO 28
CAMERO_ON 28
IE_ON 28
CUSTOM_ON 28
+V3.3S_EC
+V3.3S
C315
100n16X2
C317
100n16X2
R297
0R_2
PM_SYSRSTJ 7,17,20
12P_FPCR
Touchpad5
28 EC_UP
28 EC_PUSH
28 EC_DOWN
EC_UP
EC_PUSH
EC_DOWN
4P_WTBS

Title
<Title>

Size Custom
Document Number <Doc>
Rev <RevCode>

Date: Saturday, March 28, 2009 Sheet 37 of 40

BOM 不上

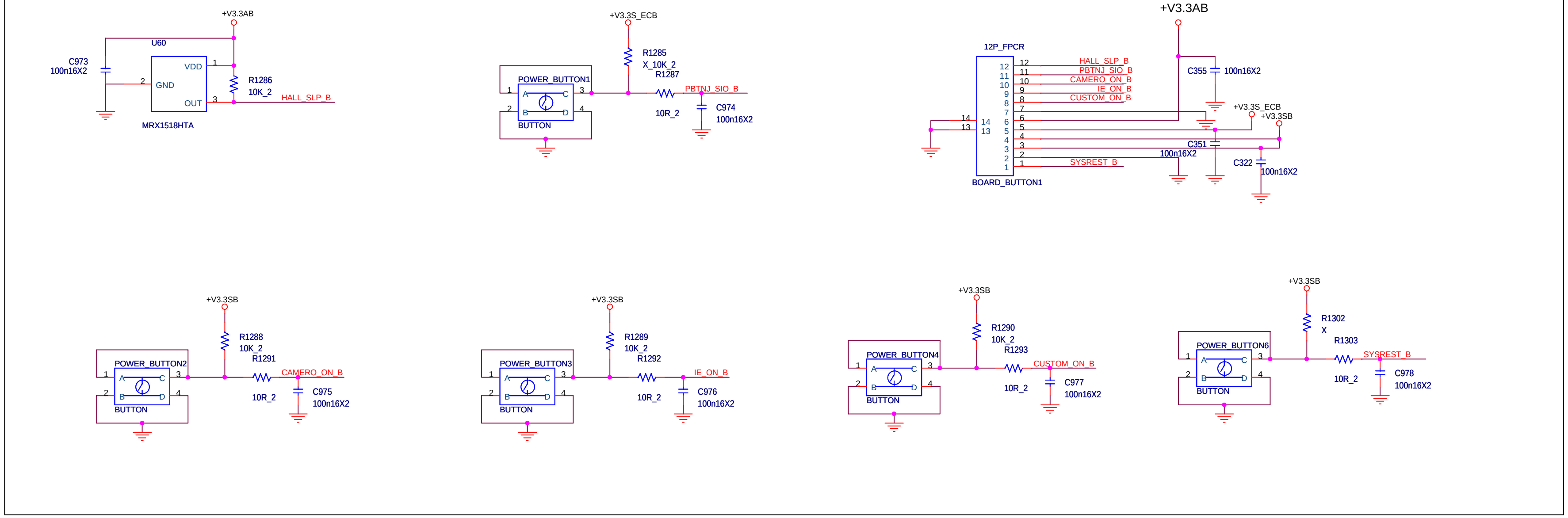
+V3.3AB
U60
C973
100n16X2
VDD
GND
OUT
1
2
3
R1286
10K_2
HALL_SLP_B
MRX1518HTA
+V3.3S_ECB
R1285
X_10K_2
R1287
POWER_BUTTON1
PBTNJ_SIO_B
10R_2
C974
100n16X2
BUTTON
A
B
C
D
4
+V3.3AB
12P_FPCR
12
11
10
9
8
7
6
5
14
13
HALL_SLP_B
PBTNJ_SIO_B
CAMERO_ON_B
IE_ON_B
CUSTOM_ON_B
SYSREST_B
C355
100n16X2
+V3.3S_ECB
+V3.3SB
C351
100n16X2
C322
100n16X2
BOARD_BUTTON1
+V3.3SB
R1288
10K_2
R1291
POWER_BUTTON2
CAMERO_ON_B
10R_2
C975
100n16X2
BUTTON
+V3.3SB
R1289
10K_2
R1292
POWER_BUTTON3
IE_ON_B
10R_2
C976
100n16X2
BUTTON
+V3.3SB
R1290
10K_2
R1293
POWER_BUTTON4
CUSTOM_ON_B
10R_2
C977
100n16X2
BUTTON
+V3.3SB
R1302
X
R1303
POWER_BUTTON6
SYSREST_B
10R_2
C978
100n16X2
BUTTON

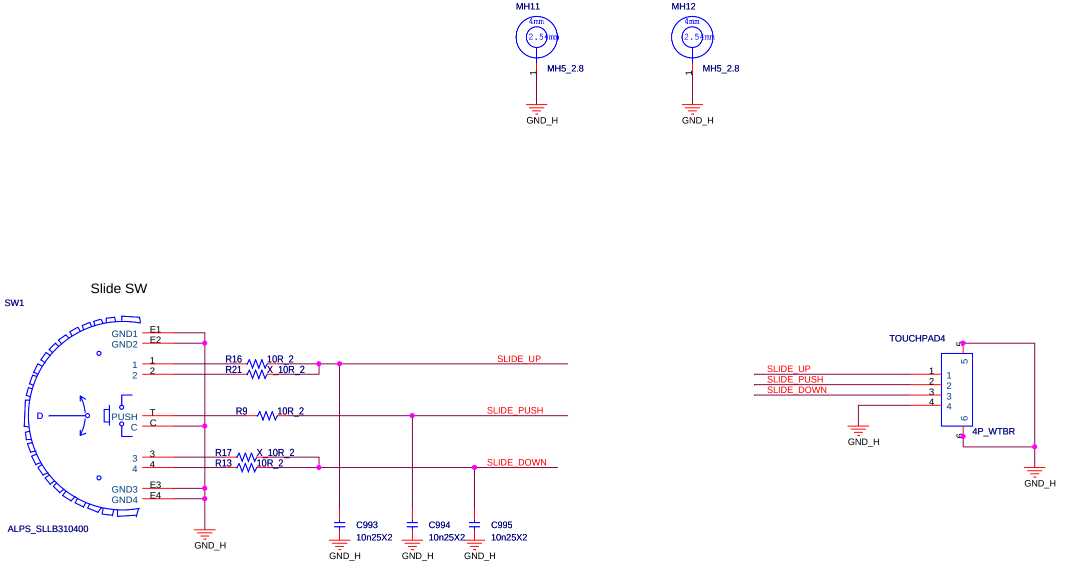
MH11
4mm
2.5mm
1
MH5_2.8
GND_H
MH12
4mm
2.5mm
1
MH5_2.8
GND_H
Slide SW
SW1
GND1
GND2
E1
E2
1
2
D
PUSH
T
C
3
4
GND3
GND4
E3
E4
ALPS_SLLB310400
GND_H
R16
10R_2
R21
X_10R_2
R9
10R_2
R17
X_10R_2
R13
10R_2
SLIDE_UP
SLIDE_PUSH
SLIDE_DOWN
C993
10n25X2
GND_H
C994
10n25X2
GND_H
C995
10n25X2
GND_H
TOUCHPAD4
SLIDE_UP
SLIDE_PUSH
SLIDE_DOWN
1
2
3
4
5
6
4P_WTBR
GND_H
GND_H

Title
<Title>

Size
C
Document Number
<Doc>
Rev
<RevCode>

Date: Thursday, April 16, 2009 Sheet 38 of 40

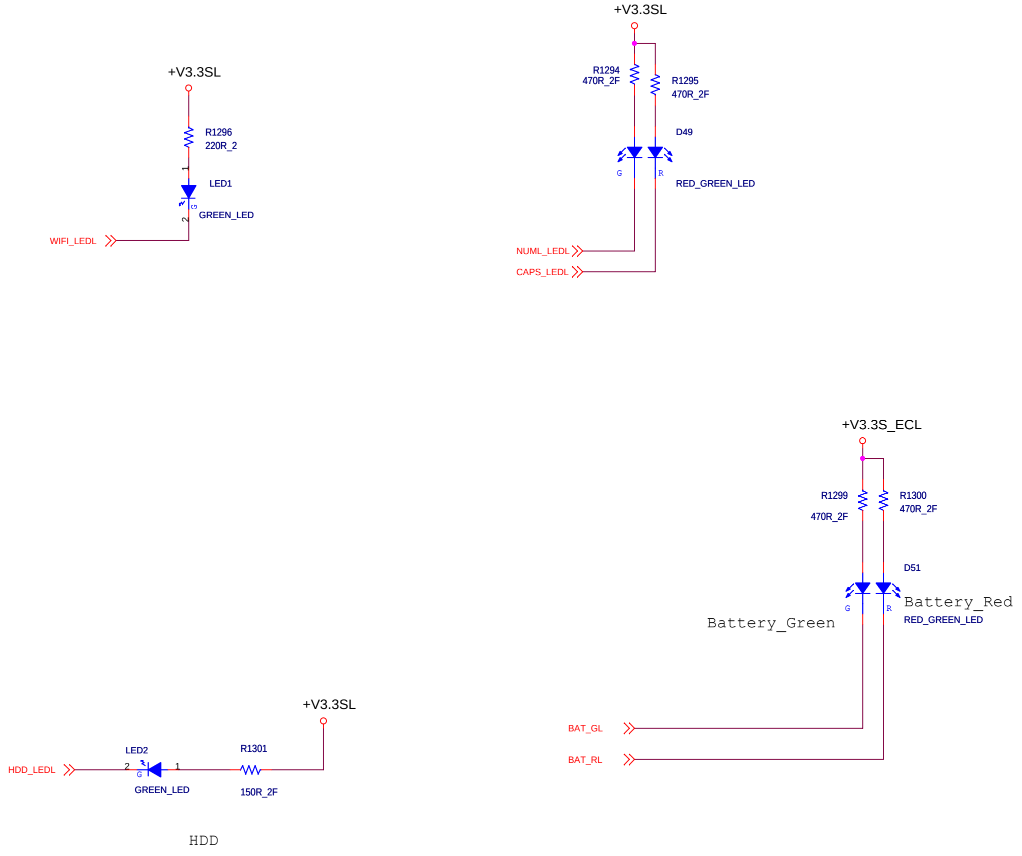
+V3.3SL
R1296
220R_2
LED1
GREEN_LED
WIFI_LEDL
+V3.3SL
R1294
470R_2F
R1295
470R_2F
D49
G
R
RED_GREEN_LED
NUML_LEDL
CAPS_LEDL
+V3.3S_ECL
R1299
470R_2F
R1300
470R_2F
D51
G
R
Battery_Red
Battery_Green
RED_GREEN_LED
BAT_GL
BAT_RL
+V3.3SL
LED2
R1301
HDD_LEDL
GREEN_LED
150R_2F
HDD

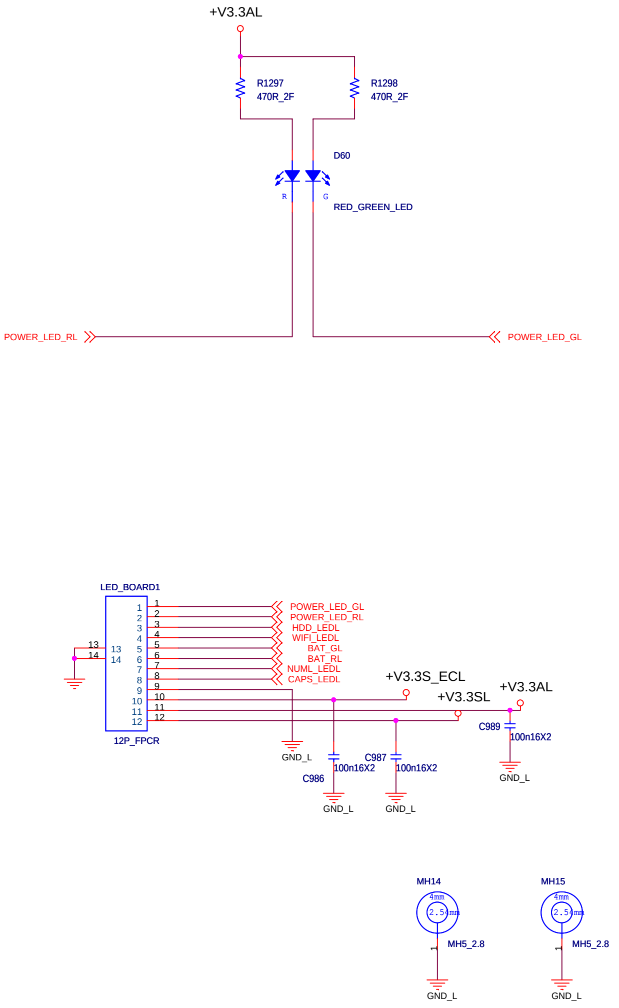
+V3.3AL
R1297
470R_2F
R1298
470R_2F
D60
R
G
RED_GREEN_LED
POWER_LED_RL
POWER_LED_GL
LED_BOARD1
12P_FPCR
POWER_LED_GL
POWER_LED_RL
HDD_LEDL
WIFI_LEDL
BAT_GL
BAT_RL
NUML_LEDL
CAPS_LEDL
+V3.3S_ECL
+V3.3SL
+V3.3AL
C989
100n16X2
C986
100n16X2
C987
100n16X2
GND_L
GND_L
GND_L
GND_L
MH14
MH15
4mm
2.5mm
MH5_2.8
MH5_2.8
GND_L
GND_L

	ON	OFF	REMARK
POWER_LED_G	L	H	GREEN
POWER_LED_R	L	H	RED
WIFI_LED	L	H	GREEN
BAT_G	L	H	GREEN
BAT_R	L	H	RED
CAPS_LED	L	H	RED
NUM_LED	L	H	GREEN

Title
<Title>

Size C
Document Number <Doc>
Rev <RevCode>

Date: Tuesday, April 14, 2009 Sheet 39 of 40

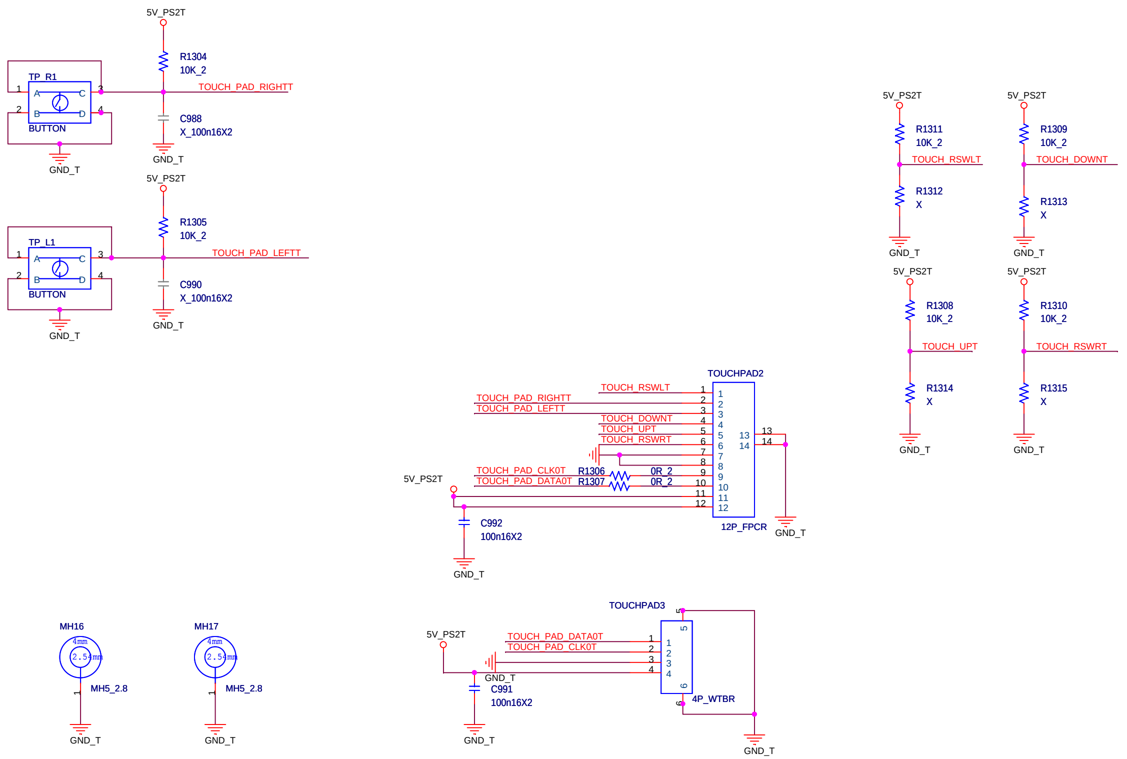
5V_PS2T
R1304
10K_2
TP_R1
BUTTON
TOUCH_PAD_RIGHTT
C988
X_100n16X2
GND_T
5V_PS2T
R1305
10K_2
TP_L1
BUTTON
TOUCH_PAD_LEFTT
C990
X_100n16X2
GND_T
5V_PS2T
R1311
10K_2
TOUCH_RSWLT
R1312
X
5V_PS2T
R1309
10K_2
TOUCH_DOWNT
R1313
X
5V_PS2T
R1308
10K_2
TOUCH_UPT
R1314
X
5V_PS2T
R1310
10K_2
TOUCH_RSWRT
R1315
X
TOUCHPAD2
12P_FPCR
TOUCH_RSWLT
TOUCH_PAD_RIGHTT
TOUCH_PAD_LEFTT
TOUCH_DOWNT
TOUCH_UPT
TOUCH_RSWRT
TOUCH_PAD_CLK0T
TOUCH_PAD_DATA0T
R1306
R1307
0R_2
0R_2
5V_PS2T
C992
100n16X2
GND_T
MH16
MH17
MH5_2.8
MH5_2.8
4mm
2.5mm
TOUCHPAD3
4P_WTBR
5V_PS2T
TOUCH_PAD_DATA0T
TOUCH_PAD_CLK0T
C991
100n16X2
GND_T

Title
<Title>

Size C
Document Number <Doc>
Rev <RevCode>

Date: Monday, April 13, 2009
Sheet 40 of 40