Modify the record: with software changes, New connection method, the signal line WAKEUP_KEY to U4.P33 (P1_1), Old connection method, the signal line WAKEUP_KEY to U4.P16 (P3_5).

Signal line WAKEUP_KEY increase pull-up resistor.

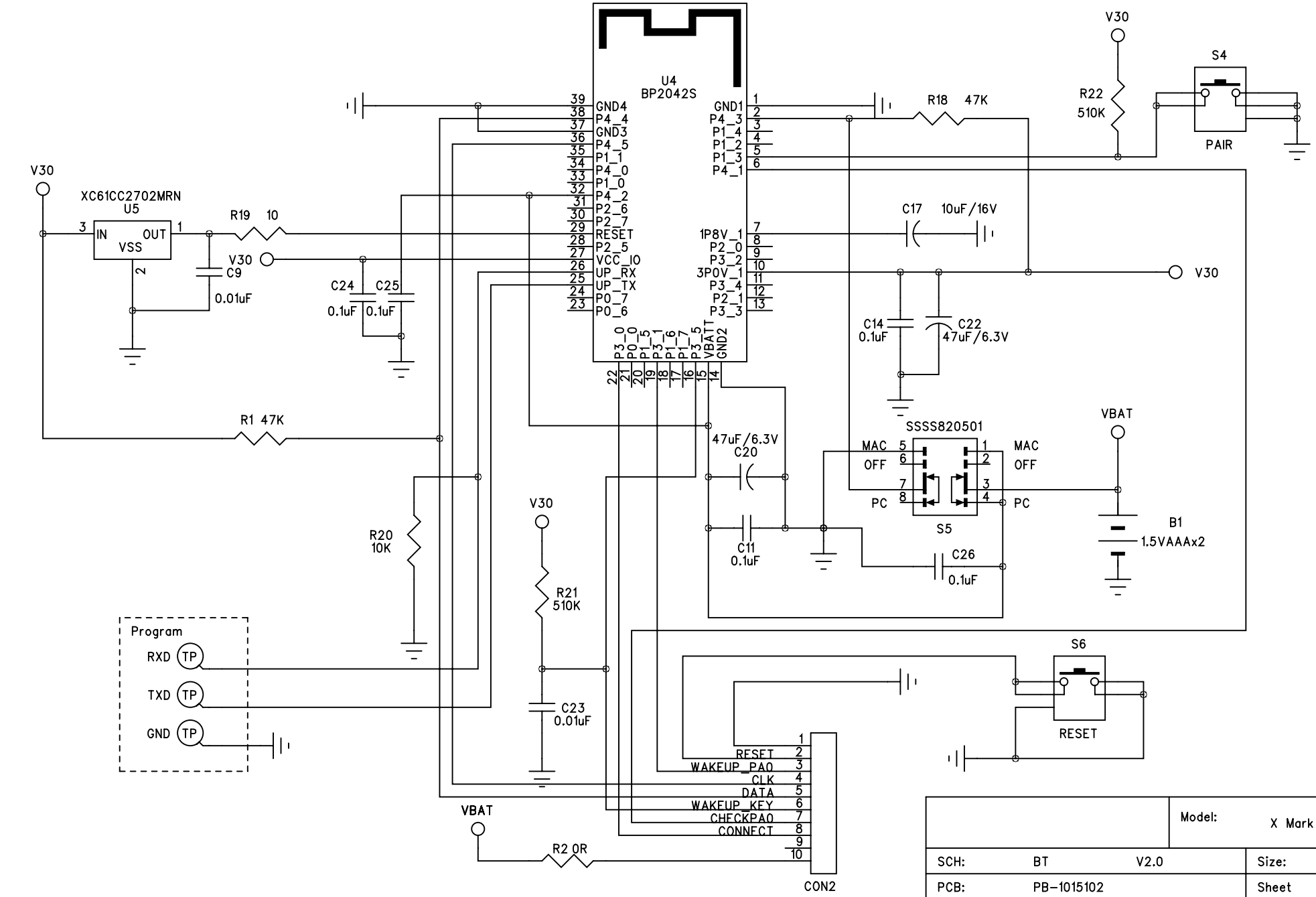

		Model:	X Mark 1K BT
SCH:	BT V2.0	Size:	A4
PCB:	PB-1015102	Sheet	1 of 1
Drawn By: YuJinTao 2011-04-19	Check By:	Comfirm By:	

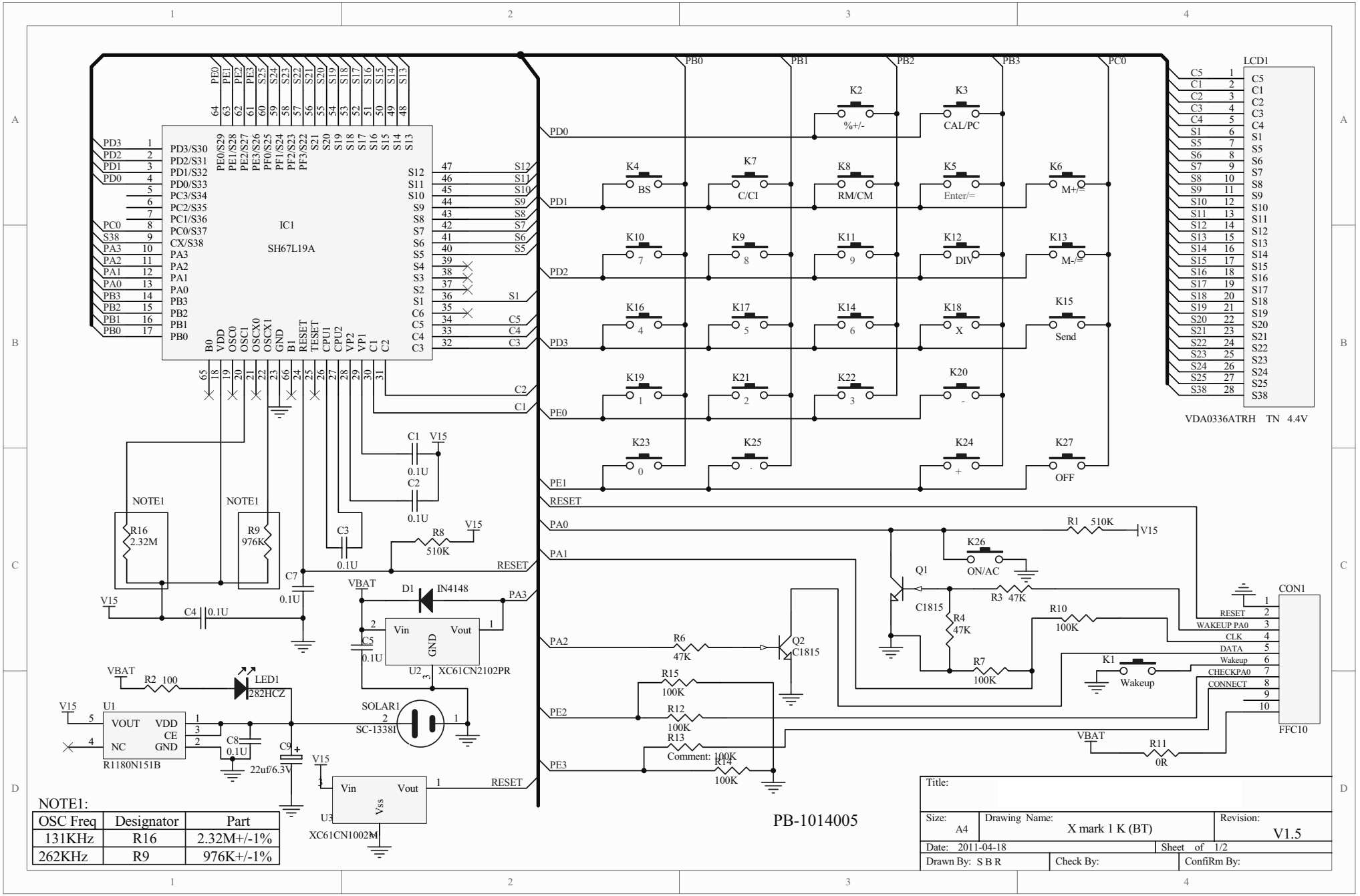

NOTE1:

OSC Freq	Designator	Part
131KHz	R16	2.32M+/-1%
262KHz	R9	976K+/-1%

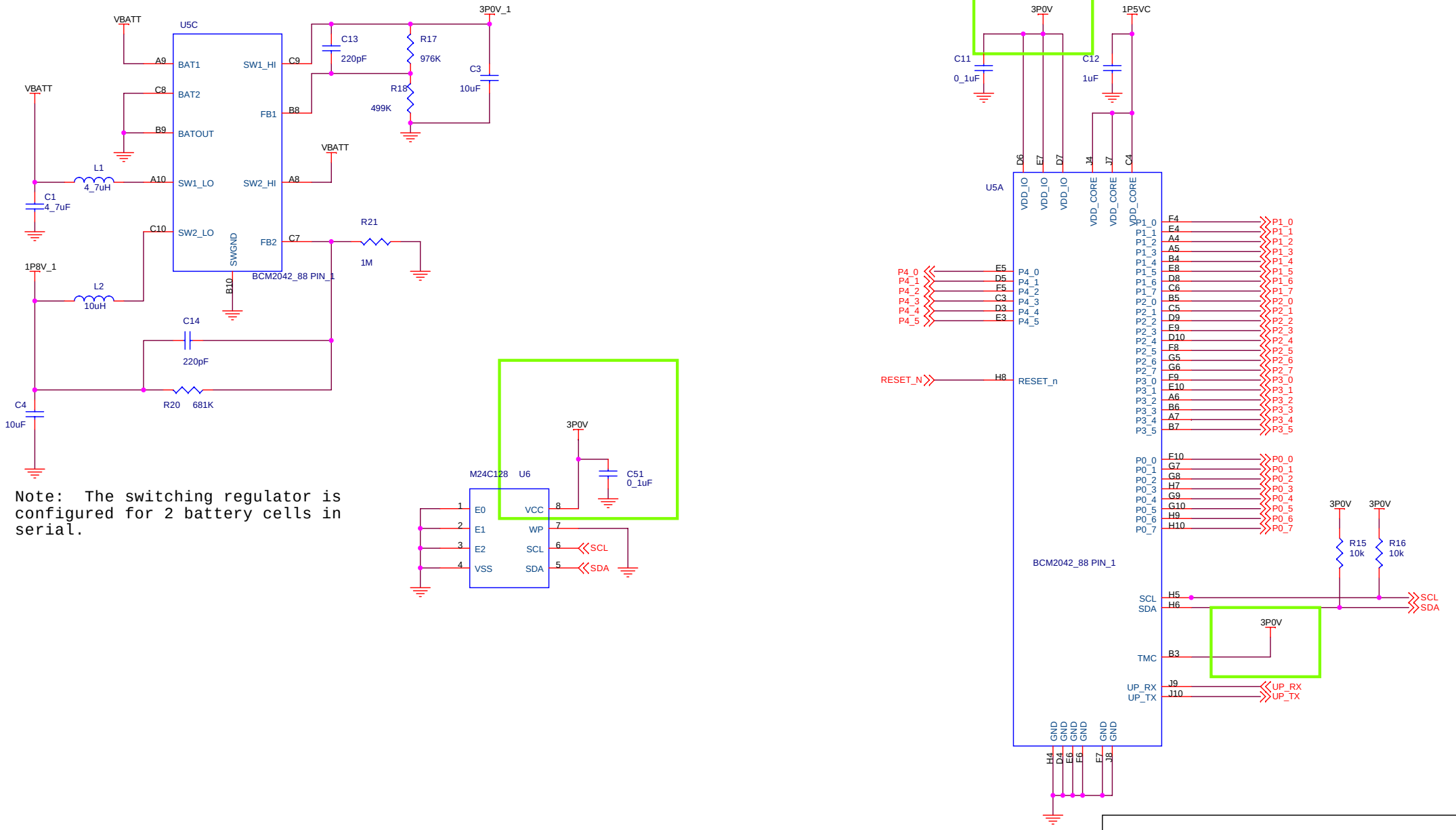

U4 BP2042S module

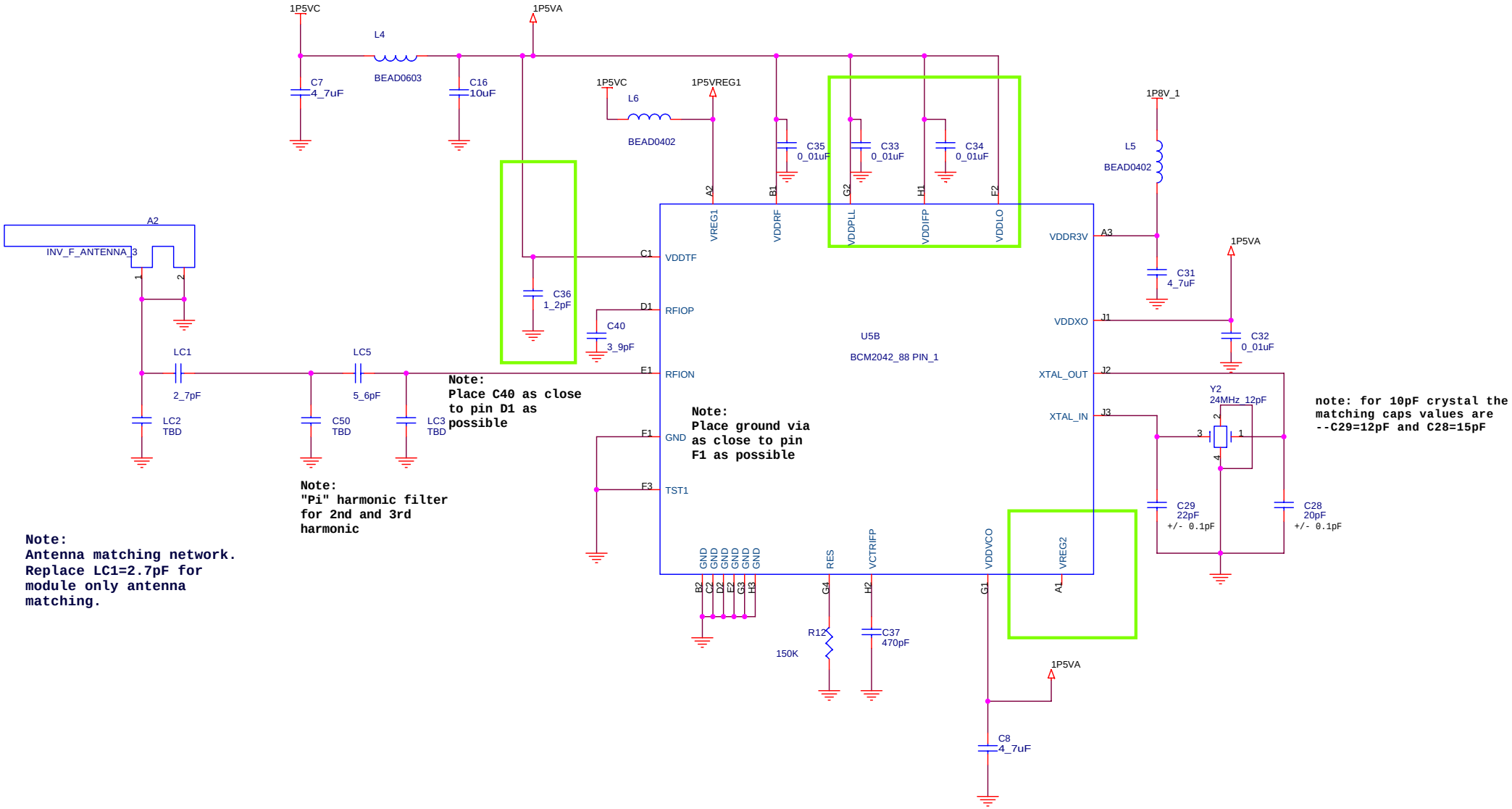

Title	BCM92042MDX-B88--- RF	
Size	Document Number	Rev V1
Date: Tuesday, November 15, 2005	Sheet 3 of 4	

U4 BP2042S module

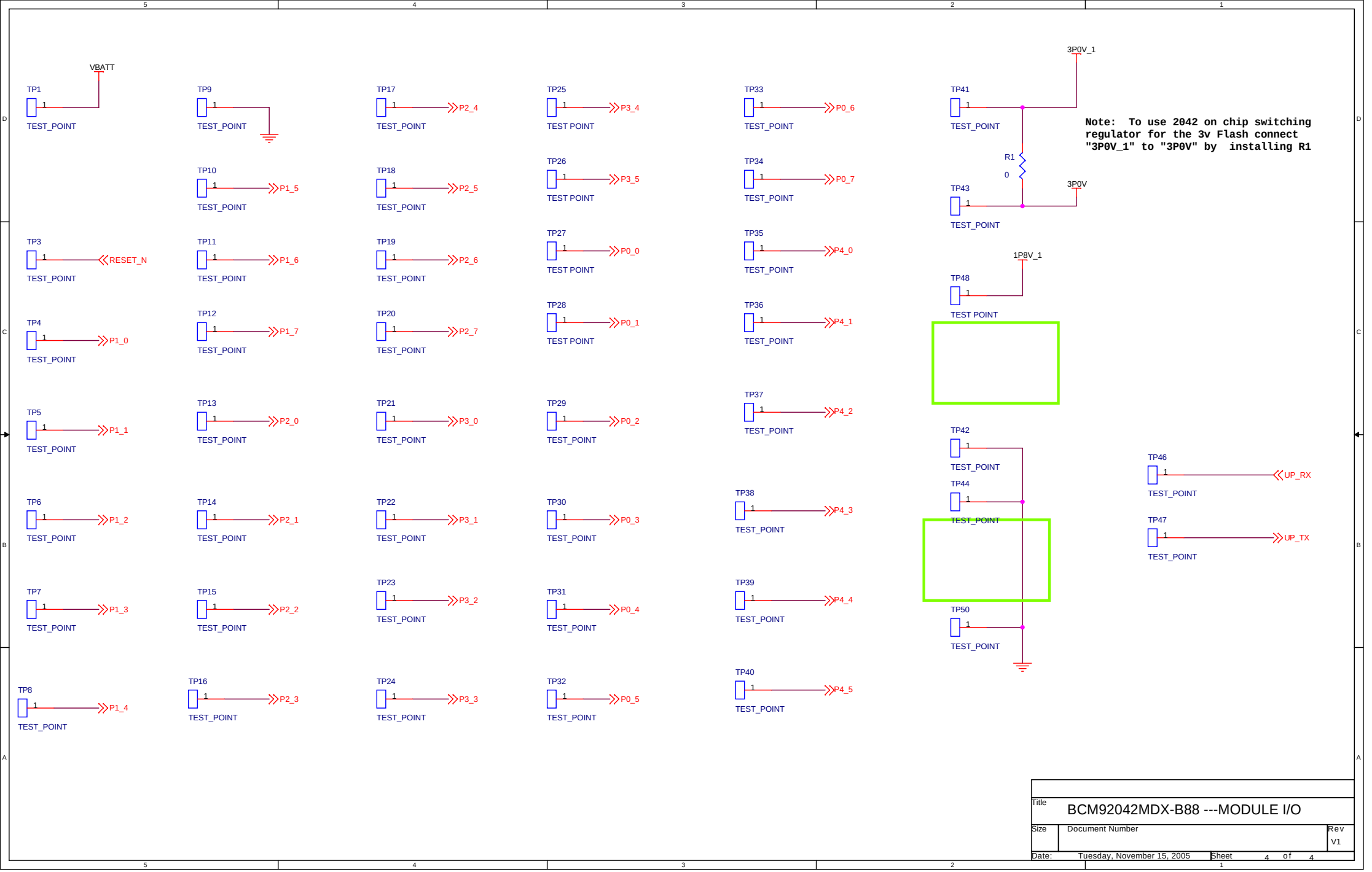

U4 BP2042S module