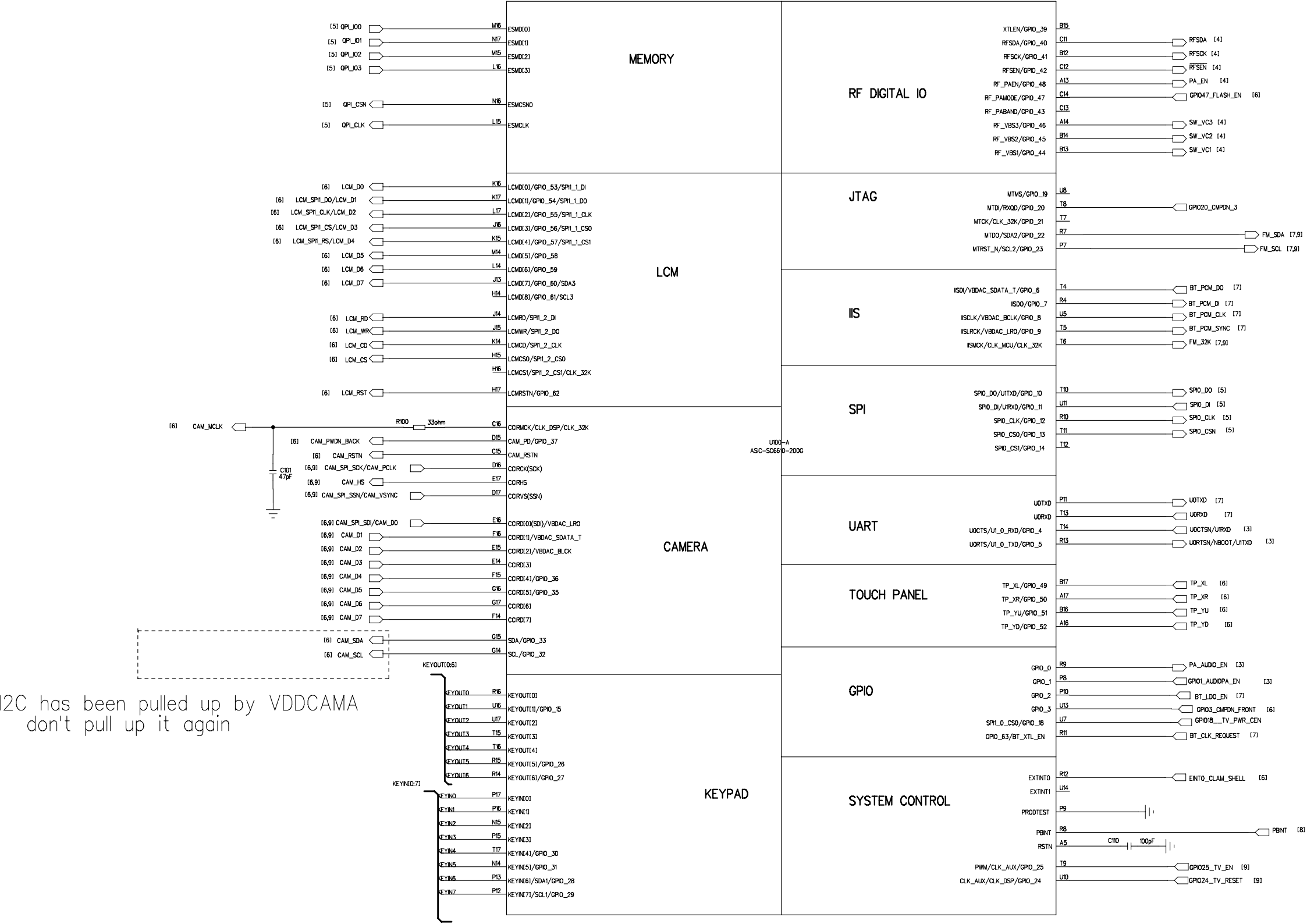
MEMORY
[5] QPI_IO0
[5] QPI_IO1
[5] QPI_IO2
[5] QPI_IO3
[5] QPI_CSN
[5] QPI_CLK
M16 ESMD[0]
N17 ESMD[1]
M15 ESMD[2]
L16 ESMD[3]
N16 ESMCSN0
L15 ESMCLK
LCM
[6] LCM_D0
[6] LCM_SPI1_DO/LCM_D1
[6] LCM_SPI1_CLK/LCM_D2
[6] LCM_SPI1_CS/LCM_D3
[6] LCM_SPI1_RS/LCM_D4
[6] LCM_D5
[6] LCM_D6
[6] LCM_D7
[6] LCM_RD
[6] LCM_WR
[6] LCM_CD
[6] LCM_CS
[6] LCM_RST
K16 LCMD[0]/GPIO_53/SPI1_1_DI
K17 LCMD[1]/GPIO_54/SPI1_1_DO
L17 LCMD[2]/GPIO_55/SPI1_1_CLK
J16 LCMD[3]/GPIO_56/SPI1_1_CS0
K15 LCMD[4]/GPIO_57/SPI1_1_CS1
M14 LCMD[5]/GPIO_58
L14 LCMD[6]/GPIO_59
J13 LCMD[7]/GPIO_60/SDA3
H14 LCMD[8]/GPIO_61/SCL3
J14 LCMRD/SPI1_2_DI
J15 LCMWR/SPI1_2_DO
K14 LCMCD/SPI1_2_CLK
H15 LCMCS0/SPI1_2_CS0
H16 LCMCS1/SPI1_2_CS1/CLK_32K
H17 LCMRSTN/GPIO_62
CAMERA
[6] CAM_MCLK
R100 33ohm
C101 47pF
[6] CAM_PWDN_BACK
[6] CAM_RSTN
[6,9] CAM_SPI_SCK/CAM_PCLK
[6,9] CAM_HS
[6,9] CAM_SPI_SSN/CAM_VSYNC
[6,9] CAM_SPI_SDI/CAM_D0
[6,9] CAM_D1
[6,9] CAM_D2
[6,9] CAM_D3
[6,9] CAM_D4
[6,9] CAM_D5
[6,9] CAM_D6
[6,9] CAM_D7
[6] CAM_SDA
[6] CAM_SCL
C16 CCIRMCK/CLK_DSP/CLK_32K
D15 CAM_PD/GPIO_37
C15 CAM_RSTN
D16 CCIRCK(SCK)
E17 CCIRHS
D17 CCIRVS(SSN)
E16 CCIRD[0](SDI)/VBDAC_LRO
F16 CCIRD[1]/VBDAC_SDATA_T
E15 CCIRD[2]/VBDAC_BLCK
E14 CCIRD[3]
F15 CCIRD[4]/GPIO_36
G16 CCIRD[5]/GPIO_35
G17 CCIRD[6]
F14 CCIRD[7]
G15 SDA/GPIO_33
G14 SCL/GPIO_32
I2C has been pulled up by VDDCAMA
don't pull up it again
KEYPAD
KEYOUT[0:6]
KEYOUT0 R16 KEYOUT[0]
KEYOUT1 U16 KEYOUT[1]/GPIO_15
KEYOUT2 U17 KEYOUT[2]
KEYOUT3 T15 KEYOUT[3]
KEYOUT4 T16 KEYOUT[4]
KEYOUT5 R15 KEYOUT[5]/GPIO_26
KEYOUT6 R14 KEYOUT[6]/GPIO_27
KEYIN[0:7]
KEYIN0 P17 KEYIN[0]
KEYIN1 P16 KEYIN[1]
KEYIN2 N15 KEYIN[2]
KEYIN3 P15 KEYIN[3]
KEYIN4 T17 KEYIN[4]/GPIO_30
KEYIN5 N14 KEYIN[5]/GPIO_31
KEYIN6 P13 KEYIN[6]/SDA1/GPIO_28
KEYIN7 P12 KEYIN[7]/SCL1/GPIO_29
U100-A
ASIC-SC6610-200G
RF DIGITAL IO
XTLEN/GPIO_39 B15
RFSDA/GPIO_40 C11 RFSDA [4]
RFSCK/GPIO_41 B12 RFSCK [4]
RFSEN/GPIO_42 C12 RFSEN [4]
RF_PAEN/GPIO_48 A13 PA_EN [4]
RF_PAMODE/GPIO_47 C14 GPIO47_FLASH_EN [6]
RF_PABAND/GPIO_43 C13
RF_VBS3/GPIO_46 A14 SW_VC3 [4]
RF_VBS2/GPIO_45 B14 SW_VC2 [4]
RF_VBS1/GPIO_44 B13 SW_VC1 [4]
JTAG
MTMS/GPIO_19 U8
MTDI/RXQD/GPIO_20 T8 GPIO20_CMPDN_3
MTCK/CLK_32K/GPIO_21 T7
MTDO/SDA2/GPIO_22 R7 FM_SDA [7,9]
MTRST_N/SCL2/GPIO_23 P7 FM_SCL [7,9]
IIS
IISDI/VBDAC_SDATA_T/GPIO_6 T4 BT_PCM_DO [7]
IISDO/GPIO_7 R4 BT_PCM_DI [7]
IISCLK/VBDAC_BCLK/GPIO_8 U5 BT_PCM_CLK [7]
IISLRCK/VBDAC_LRO/GPIO_9 T5 BT_PCM_SYNC [7]
IISMCK/CLK_MCU/CLK_32K T6 FM_32K [7,9]
SPI
SPI0_DO/U1TXD/GPIO_10 T10 SPI0_DO [5]
SPI0_DI/U1RXD/GPIO_11 U11 SPI0_DI [5]
SPI0_CLK/GPIO_12 R10 SPI0_CLK [5]
SPI0_CS0/GPIO_13 T11 SPI0_CSN [5]
SPI0_CS1/GPIO_14 T12
UART
U0TXD P11 U0TXD [7]
U0RXD T13 U0RXD [7]
U0CTS/U1_0_RXD/GPIO_4 T14 U0CTSN/U1RXD [3]
U0RTS/U1_0_TXD/GPIO_5 R13 U0RTSN/NBOOT/U1TXD [3]
TOUCH PANEL
TP_XL/GPIO_49 B17 TP_XL [6]
TP_XR/GPIO_50 A17 TP_XR [6]
TP_YU/GPIO_51 B16 TP_YU [6]
TP_YD/GPIO_52 A16 TP_YD [6]
GPIO
GPIO_0 R9 PA_AUDIO_EN [3]
GPIO_1 P8 GPIO1_AUDIOPA_EN [3]
GPIO_2 P10 BT_LDO_EN [7]
GPIO_3 U13 GPIO3_CMPDN_FRONT [6]
SPI1_0_CS0/GPIO_18 U7 GPIO18_TV_PWR_CEN
GPIO_63/BT_XTL_EN R11 BT_CLK_REQUEST [7]
SYSTEM CONTROL
EXTINT0 R12 EINT0_CLAM_SHELL [6]
EXTINT1 U14
PRODTEST P9
PBINT R8 PBINT [8]
RSTN A5 C110 100pF
PWM/CLK_AUX/GPIO_25 T9 GPIO25_TV_EN [9]
CLK_AUX/CLK_DSP/GPIO_24 U10 GPIO24_TV_RESET [9]

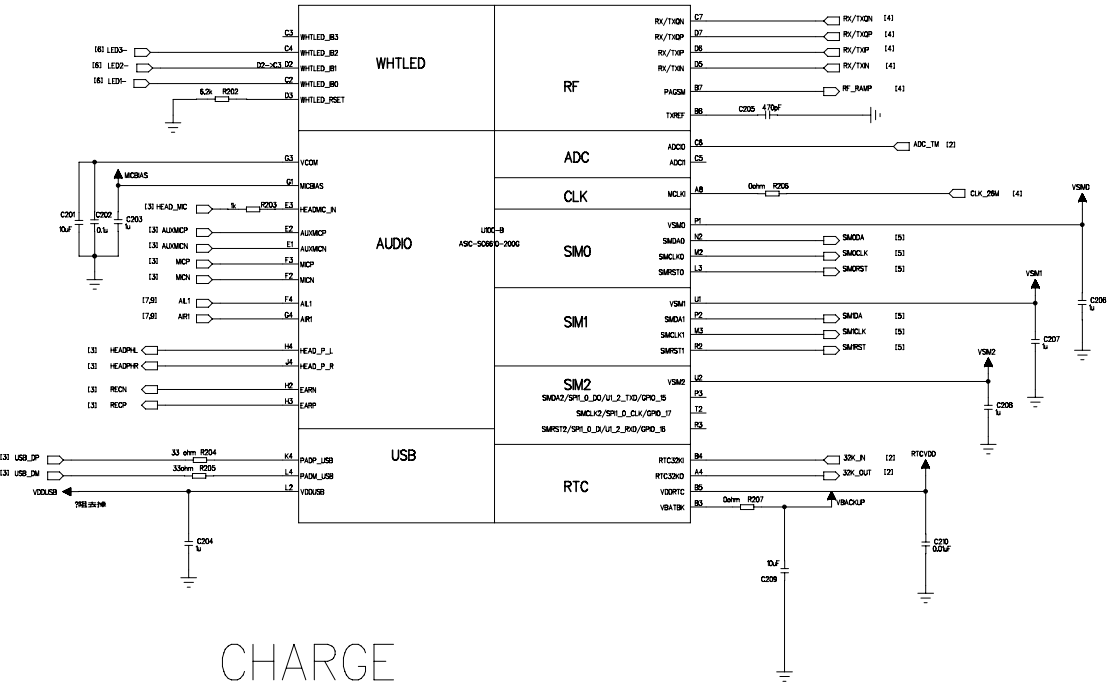

CHARGE

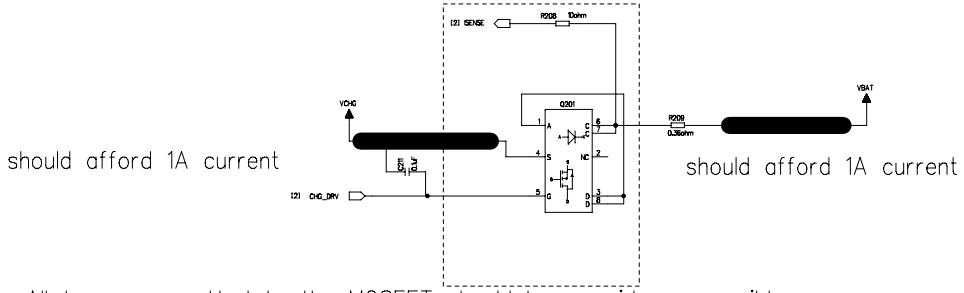

All trace connectted to the MOSFET should be as wide as possible

BAT CON.

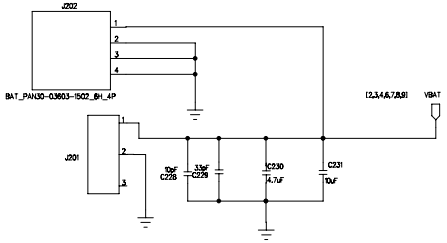

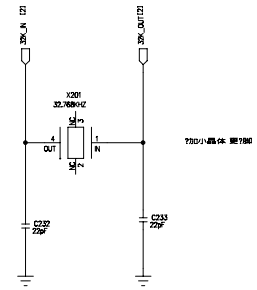

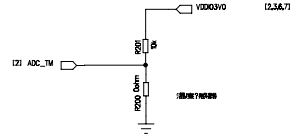

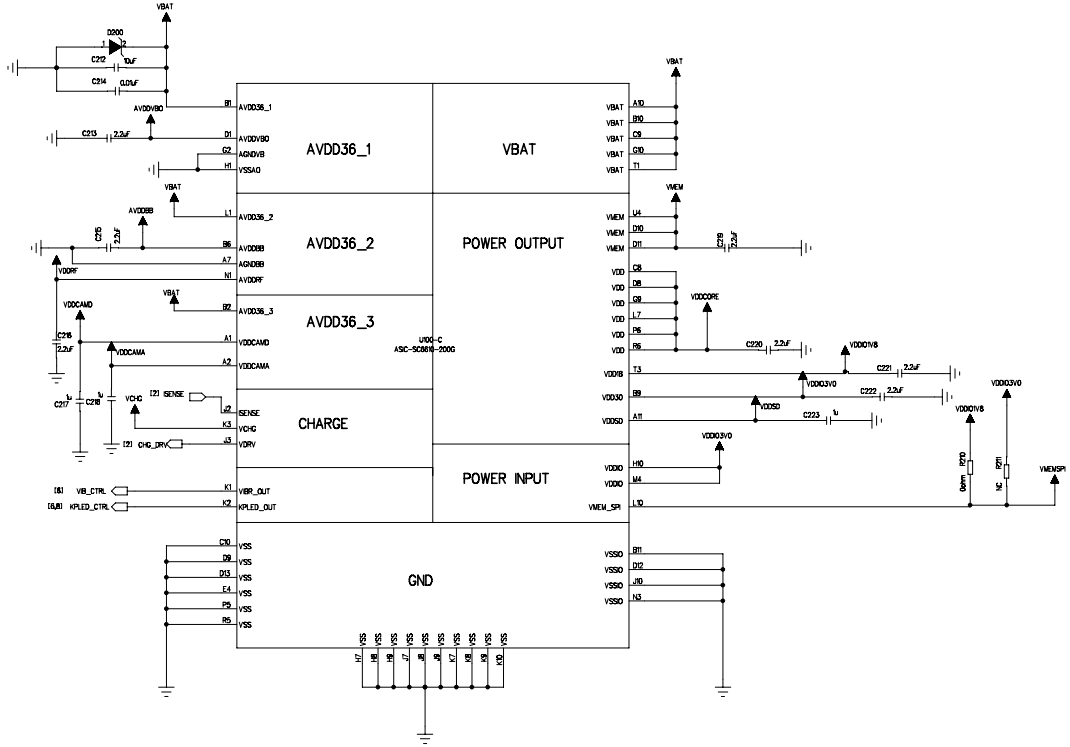

MAIN MIC

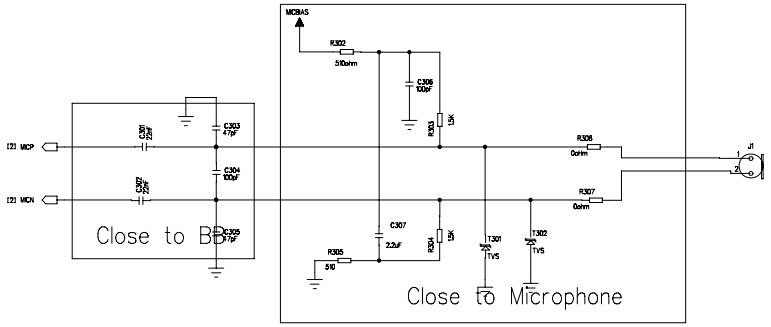

HEADPHONE

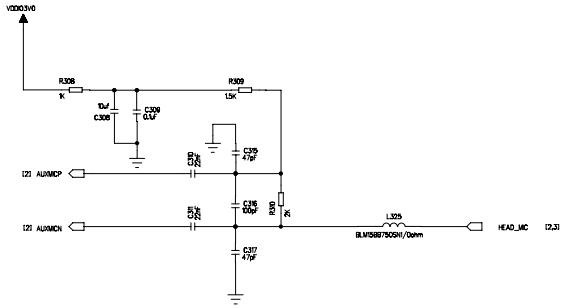

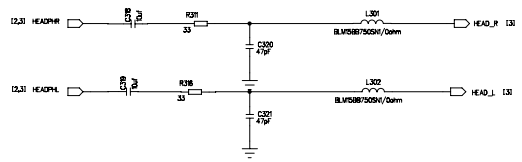

AUDIO JACK

Charge I/O

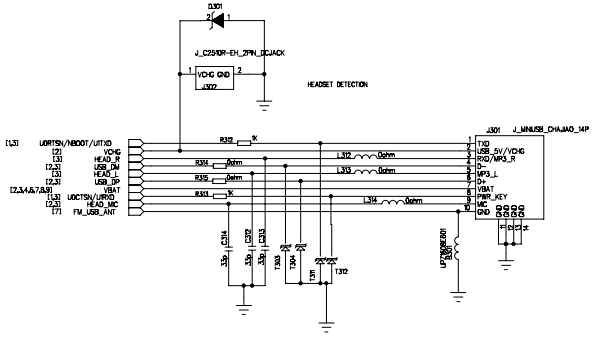

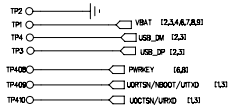

RECEIVER

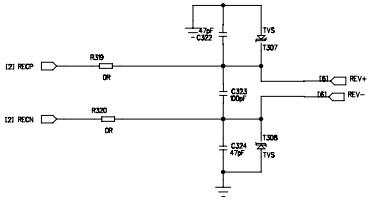

Class K

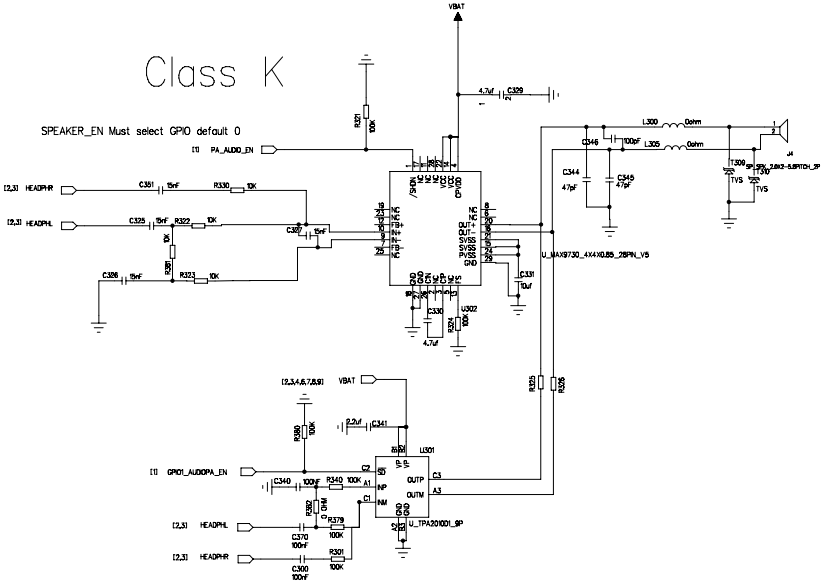

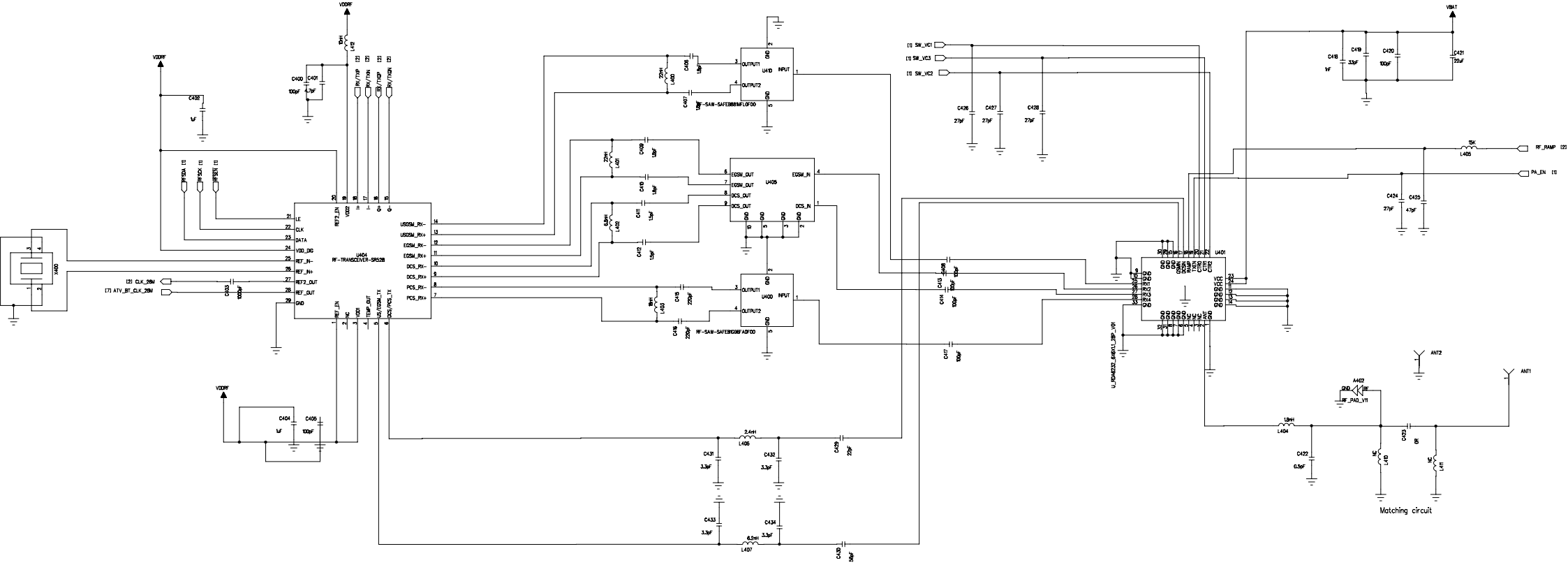

VDDRF
VBAT
U404
RF-TRANSCEIVER-SR52B
U410
U405
U400
U401
RF-SAW-SAFEB881MFL0FC0
RF-SAW-SAFEB1G98FA0FC0
RF_RAMP
PA_EN
ANT1
ANT2
Matching circuit

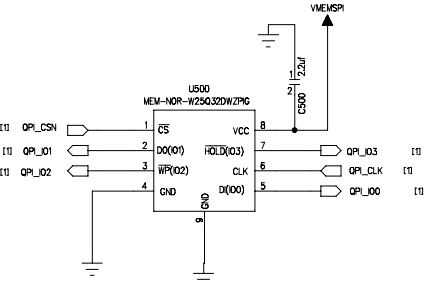

Serial Flash WSON-8

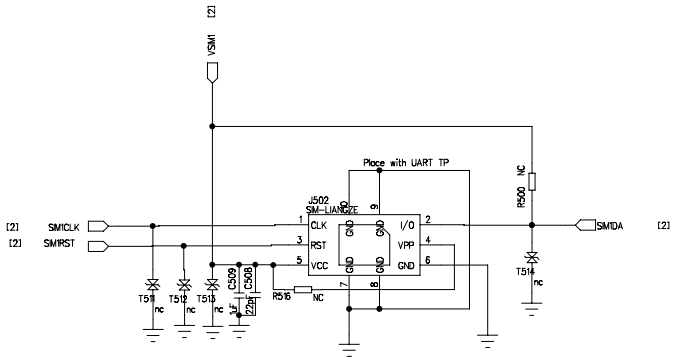

SIM1

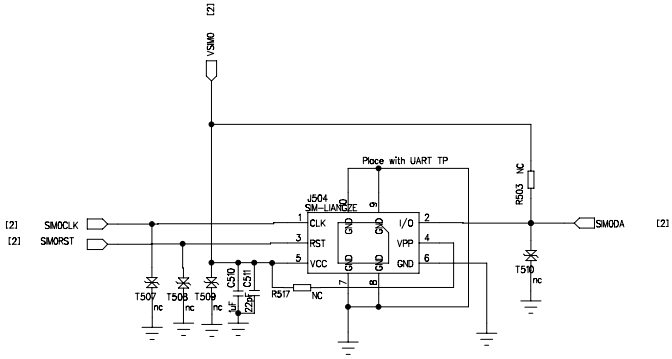

SIM2

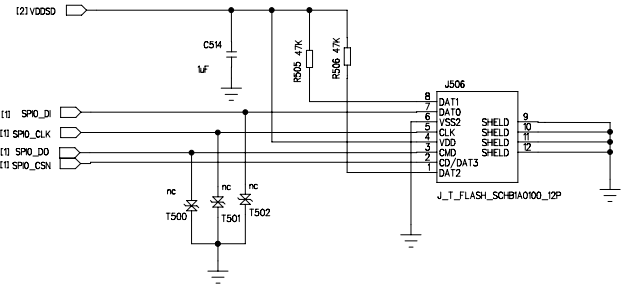

T-FLASH

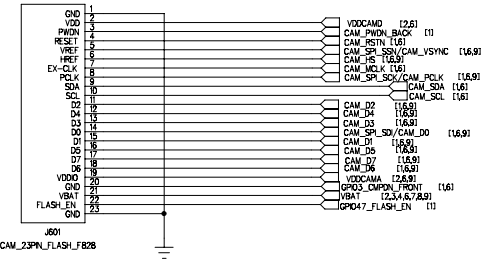
GND
VDD
PWDN
RESET
VREF
HREF
EX-CLK
PCLK
SDA
SCL
D2
D4
D3
D0
D1
D5
D7
D6
VDDIO
GND
VBAT
FLASH_EN
GND
VDDCAMD [2,6]
CAM_PWDN_BACK [1]
CAM_RSTN [1,6]
CAM_SPI_SSN/CAM_VSYNC [1,6,9]
CAM_HS [1,6,9]
CAM_MCLK [1,6]
CAM_SPI_SCK/CAM_PCLK [1,6,9]
CAM_SDA [1,6]
CAM_SCL [1,6]
CAM_D2 [1,6,9]
CAM_D4 [1,6,9]
CAM_D3 [1,6,9]
CAM_SPI_SDI/CAM_D0 [1,6,9]
CAM_D1 [1,6,9]
CAM_D5 [1,6,9]
CAM_D7 [1,6,9]
CAM_D6 [1,6,9]
VDDCAMA [2,6,9]
GPIO3_CMPDN_FRONT [1,6]
VBAT [2,3,4,6,7,8,9]
GPIO47_FLASH_EN [1]
J601
CAM_23PIN_FLASH_FB2B

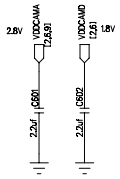
2.8V
VDDCAMA [2,6,9]
C601
2.2uf
VDDCAMD [2,6]
1.8V
C602
2.2uf

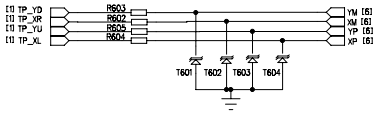
[1] TP_YD
[1] TP_XR
[1] TP_YU
[1] TP_XL
R603
R602
R605
R604
YM [6]
XM [6]
YP [6]
XP [6]
T601
T602
T603
T604

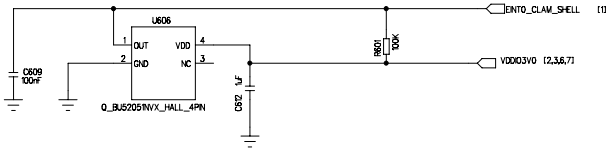
U606
1
OUT
2
GND
VDD
4
NC
3
R601
100K
C609
100nF
C612
1uF
Q_BU52051NVX_HALL_4PIN
ENT0_CLAM_SHELL [1]
VDDIO3V0 [2,3,6,7]

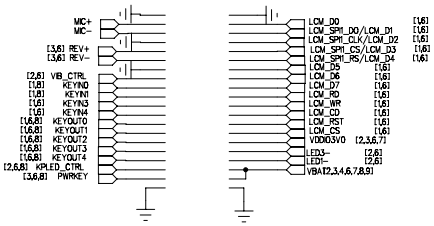
MIC+
MIC-
[3,6] REV+
[3,6] REV-
[2,6] VIB_CTRL
[1,6] KEYIN0
[1,6] KEYIN1
[1,6] KEYIN3
[1,6] KEYIN4
[1,6,8] KEYOUT0
[1,6,8] KEYOUT1
[1,6,8] KEYOUT2
[1,6,8] KEYOUT3
[1,6,8] KEYOUT4
[2,6,8] KPLED_CTRL
[3,6,8] PWRKEY
LCM_D0 [1,6]
LCM_SPI_DO/LCM_D1 [1,6]
LCM_SPI_CLK/LCM_D2 [1,6]
LCM_SPI_CS/LCM_D3 [1,6]
LCM_SPI_RS/LCM_D4 [1,6]
LCM_D5 [1,6]
LCM_D6 [1,6]
LCM_D7 [1,6]
LCM_RD [1,6]
LCM_WR [1,6]
LCM_CD [1,6]
LCM_RST [1,6]
LCM_CS [1,6]
VDDIO3V0 [2,3,6,7]
LED3- [2,6]
LED1- [2,6]
VBAT[2,3,4,6,7,8,9]

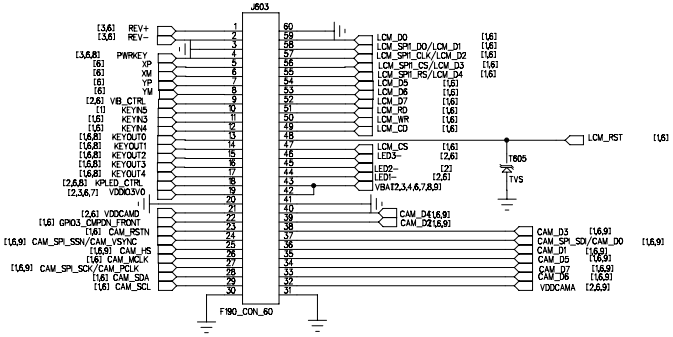
J603
[3,6] REV+
[3,6] REV-
[3,6,8] PWRKEY
[6] XP
[6] XM
[6] YP
[6] YM
[2,6] VIB_CTRL
[1] KEYIN5
[1,6] KEYIN3
[1,6] KEYIN4
[1,6,8] KEYOUT0
[1,6,8] KEYOUT1
[1,6,8] KEYOUT2
[1,6,8] KEYOUT3
[1,6,8] KEYOUT4
[2,6,8] KPLED_CTRL
[2,3,6,7] VDDIO3V0
[2,6] VDDCAMD
[1,6] GPIO3_CMPDN_FRONT
[1,6] CAM_RSTN
[1,6,9] CAM_SPI_SSN/CAM_VSYNC
[1,6,9] CAM_HS
[1,6] CAM_MCLK
[1,6,9] CAM_SPI_SCK/CAM_PCLK
[1,6] CAM_SDA
[1,6] CAM_SCL
LCM_D0 [1,6]
LCM_SPI_DO/LCM_D1 [1,6]
LCM_SPI_CLK/LCM_D2 [1,6]
LCM_SPI_CS/LCM_D3 [1,6]
LCM_SPI_RS/LCM_D4 [1,6]
LCM_D5 [1,6]
LCM_D6 [1,6]
LCM_D7 [1,6]
LCM_RD [1,6]
LCM_WR [1,6]
LCM_CD [1,6]
LCM_RST [1,6]
LCM_CS [1,6]
LED3- [2,6]
LED1- [2,6]
VBAT[2,3,4,6,7,8,9]
T605
TVS
CAM_D4[1,6,9]
CAM_D2[1,6,9]
CAM_D3 [1,6,9]
CAM_SPI_SDI/CAM_D0 [1,6,9]
CAM_D1 [1,6,9]
CAM_D5 [1,6,9]
CAM_D7 [1,6,9]
CAM_D6 [1,6,9]
VDDCAMA [2,6,9]
F190_CON_60

FM RDA5802NM

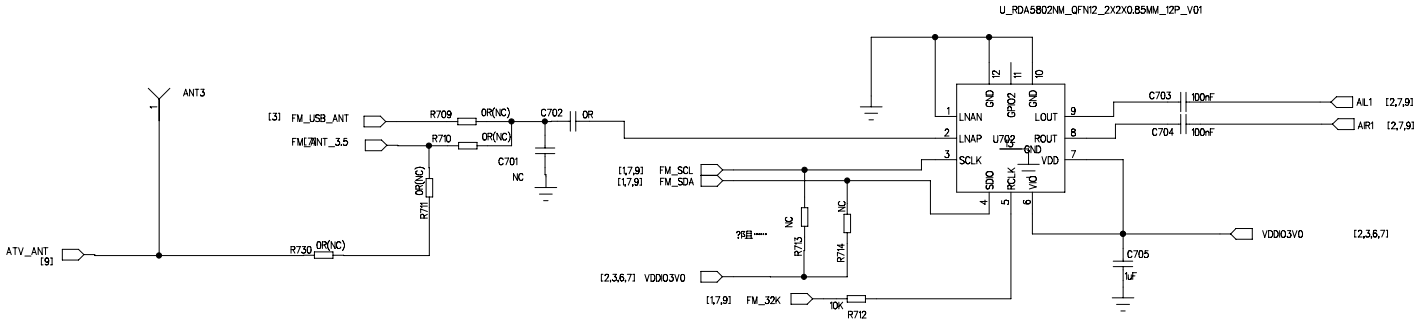

RDA5876与RDA5875兼容??,括号内?RDA5875器件?

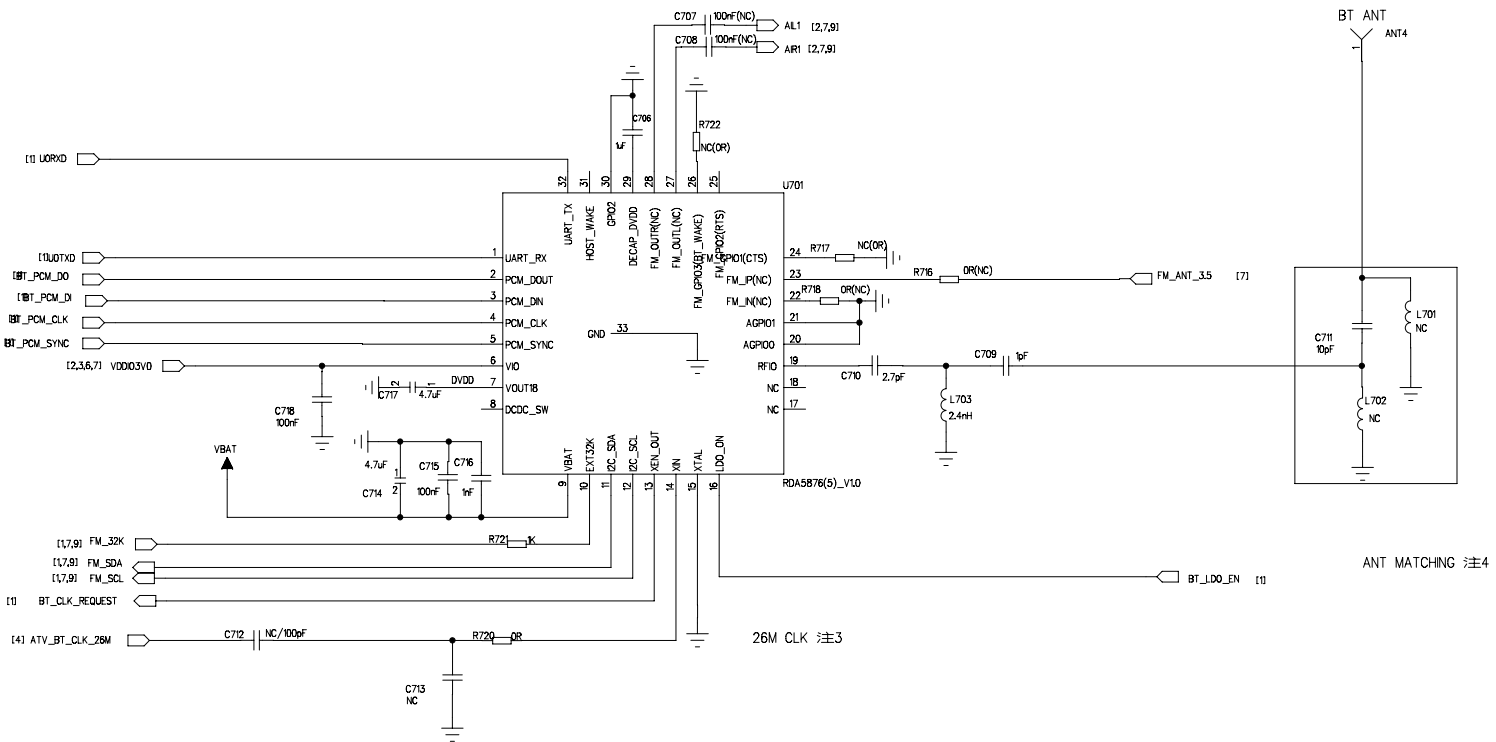

HOLE and MARK POINT

NC-FIDUCIALMARK TP8 | NC-FIDUCIALMARK TP9 | NC-FIDUCIALMARK TP10 | NC-FIDUCIALMARK TP11

[3,6] PWRKEY — R803 1K — PBINT [1]

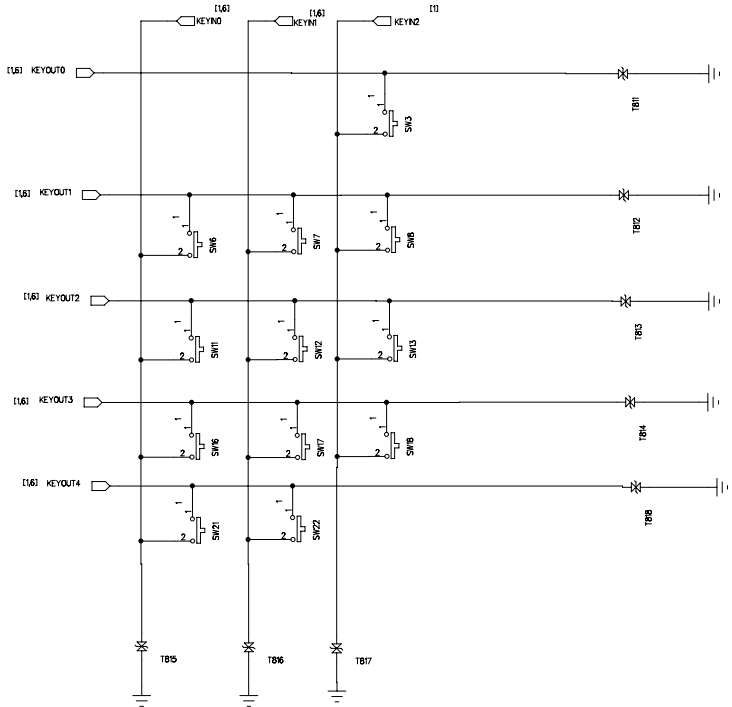

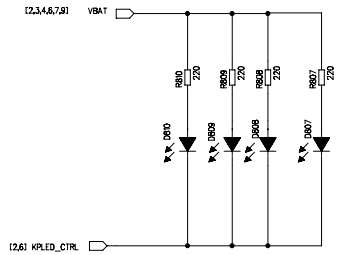

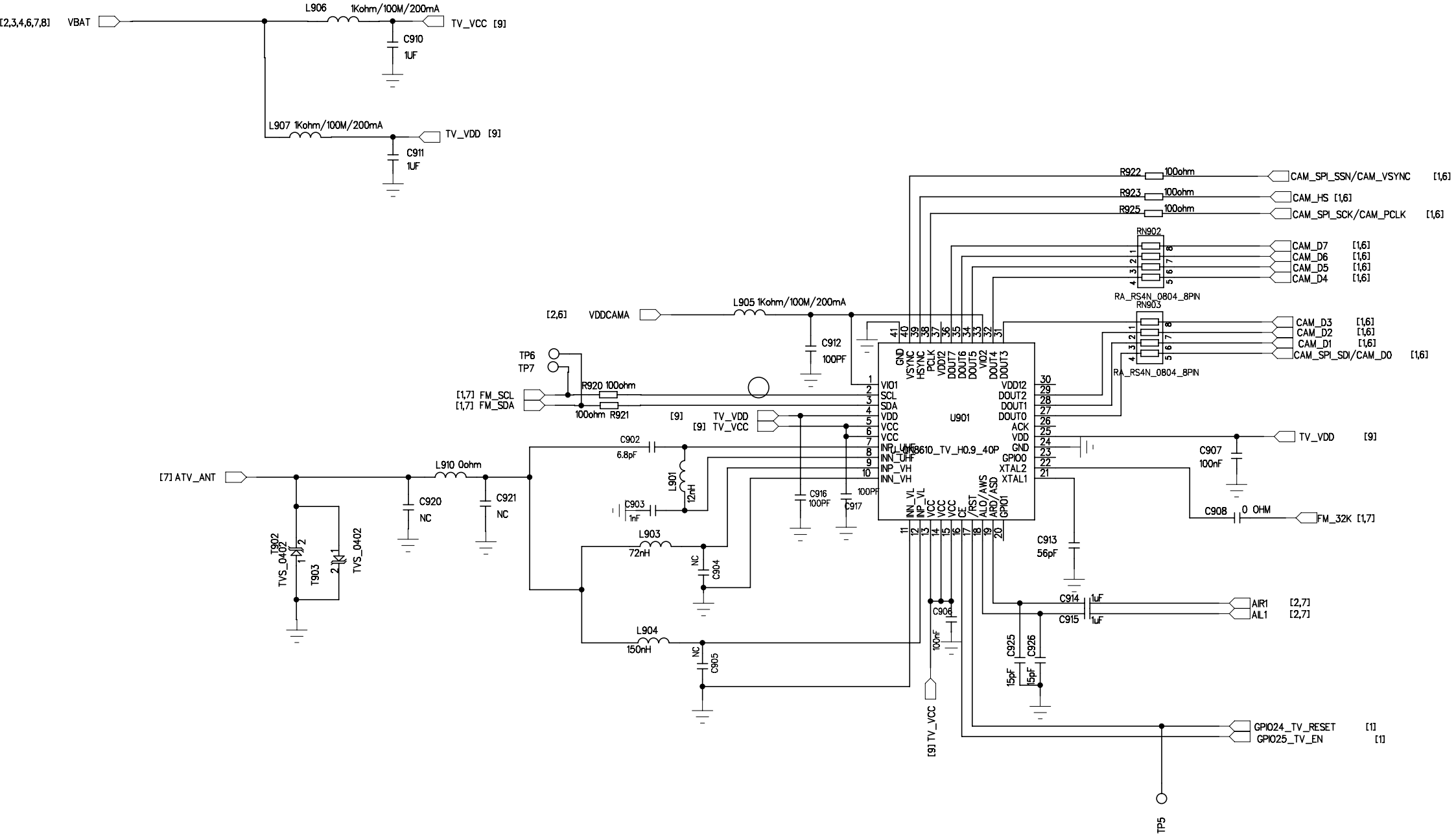
[2,3,4,6,7,8] VBAT
L906 1Kohm/100M/200mA
TV_VCC [9]
C910
1UF
L907 1Kohm/100M/200mA
TV_VDD [9]
C911
1UF
[2,6] VDDCAMA
L905 1Kohm/100M/200mA
C912
100PF
TP6
TP7
[1,7] FM_SCL
[1,7] FM_SDA
R920 100ohm
100ohm R921
[9] TV_VDD
[9] TV_VCC
U901
R922 100ohm
R923 100ohm
R925 100ohm
CAM_SPI_SSN/CAM_VSYNC [1,6]
CAM_HS [1,6]
CAM_SPI_SCK/CAM_PCLK [1,6]
RN902
RA_RS4N_0804_8PIN
CAM_D7 [1,6]
CAM_D6 [1,6]
CAM_D5 [1,6]
CAM_D4 [1,6]
RN903
RA_RS4N_0804_8PIN
CAM_D3 [1,6]
CAM_D2 [1,6]
CAM_D1 [1,6]
CAM_SPI_SDI/CAM_D0 [1,6]
TV_VDD [9]
C907
100nF
C908 0 OHM
FM_32K [1,7]
[7] ATV_ANT
L910 0ohm
C902
6.8pF
L901
12nH
C903
1nF
C916
100PF
C917
100PF
C920
NC
C921
NC
T902
TVS_0402
T903
TVS_0402
L903
72nH
C904
NC
L904
150nH
C905
NC
C913
56pF
C914
1uF
C915
1uF
AIR1 [2,7]
AIL1 [2,7]
C906
100nF
C925
15pF
C926
15pF
[9] TV_VCC
GPIO24_TV_RESET [1]
GPIO25_TV_EN [1]
TP5