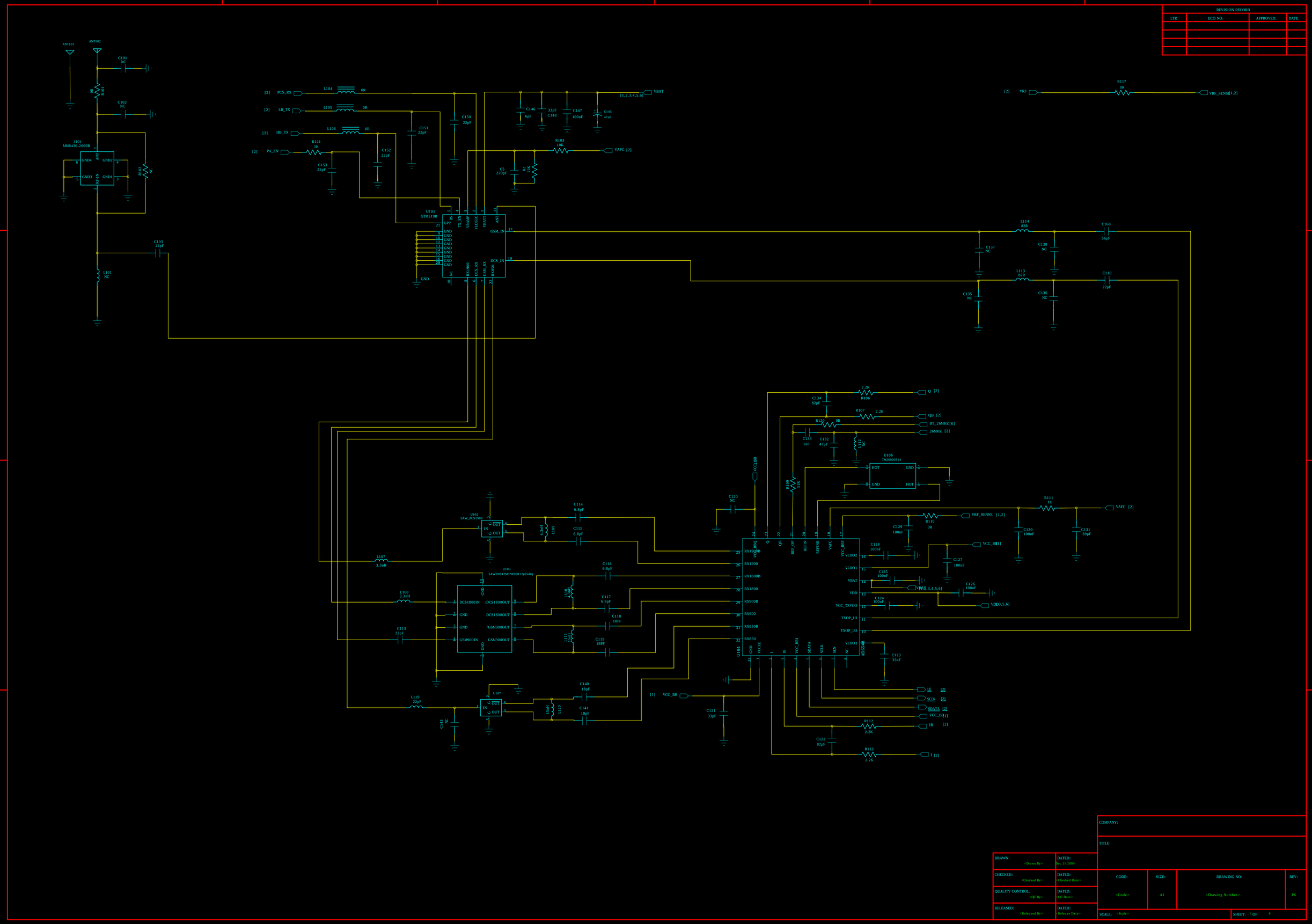

DRAWN: <Drawn By>	DATED: Dec.11 2009	COMPANY:			
CHECKED: <Checked By>	DATED: <Checked Date>	TITLE:			
QUALITY CONTROL: <QC By>	DATED: <QC Date>	CODE: <Code>	SIZE: A1	DRAWING NO: <Drawing Number>	REV: P6
RELEASED: <Released By>	DATED: <Release Date>	SCALE: <Scale>		SHEET: 1 OF 6	

REVISION RECORD			
LTR	ECO NO:	APPROVED:	DATE:

U201-A

EINT0_HEADSET [3]
BT_EINT1 [6]
GPIO42_DSIM_I2SCI1B [5]
GPIO43_CAM_FLOW [4]

/WATCHDOG [2]
/SYSRST [2,5]
26MHZ [1]

KROW0 [4]
KROW1 [4]
KROW2 [4]
KROW3 [4]
KROW4 [4]
KCOL0 [4]
KCOL1 [4]
KCOL2 [4]
KCOL3 [4]
GPIO32_CAM_CS [4]

GPIO24_AUPA_EN [3]
GPIO25_T-FLASH_CLK [5]

AVDD [4,6]

C201 22pF
X201 SSP-T7-F
C204 22pF
XOUT_23
XIN_23

GPIO26_CAM_VHREF [4]
GPIO27_CAM_READY [4]
EINT6_BT_CMD [6]
JRTCK
GPIO26/EINT4/JTRST
JTCK
GPIO27/EINT5/JTDI
GPIO28/EINT6/JTMS
JTDO

GPIO31_I2SCK [5]
SRCLKENA_23
SRCLKENAI/GPIO31_23

HB_TX [1]
LB_TX [1]
PCS_RX [1]
PA_EN [1]
GPIO20_I2SDA [6]
GPIO21_I2S_32K [6]
GPIO22_T-FLASH_DO [5]
GPIO23_T-FLASH_DI [5]
LE [1]
SDATA [1]
SCLK [1]
RFI_BUS0
RFI_BUS1
RFI_BUS2
RFI_BUS3
RFI_BUS4
RFI_BUS5
RFI_BUS6/GPIO20
RFI_BUS7/GPIO21/CLKO0
RFI_BUS8/GPIO22/COL5/CLKO1
RFI_BUS9/GPIO23/BSI_CS1/CLKO2
RSI_CS0
BSI_DATA
BSI_CLK

UTXD1/GPIO44
URXD1/GPIO45
UCTS1/SCL/GPIO46
URTS1/SDA/GPIO46
UTXD3/CLK3/GPIO47
URXD3/CLK4/GPIO48
URXD2/CDIC5/GPIO49
UTXD2/GPIO51
TXD [2,5]
RXD [2,5]
GPIO45_MUX_SCL [6]
GPIO46_MUX_SDA [6]
BT_UTXD3 [6]
BT_URXD3 [6]
GPIO49_CAM_MMCLK [4]
GPIO51_T-FLASH_CS [5]

LCD_D8/GPIO00
LCD_D7/GPIO01
LCD_D6/GPIO02
LCD_D5/GPIO03
LCD_D4/GPIO04
LCD_D3/GPIO05
I2SA0/LCD_D2/GPIO06
I2SDA/LCD_D1/GPIO07
I2SCK/LCD_D0/GPIO11
LCD_RSTB/GPIO08
LCD_WRB/GPIO09
LCD_RDB/GPIO10
LCD_A0/GPIO12
I2SCE0/LCD_CSB
I2SCE1/LCD_CS1B/GPIO14
LCD_SCL [3,4]
LCD_SDA [3,4]
LCD_SAD [3]
GPIO8_LRSTB [3]
GPIO13_LPCEOB [3]

DAICLK/EDICK/GPIO15
DAIPCMOUT/EDIDAT/GPIO16
DAIPCMIN/GPIO17
DAIRST/GPIO18
DAISYNC/EDIWS/GPIO19
BT_PCMCLK [6]
BT_PCMOUT [6]
BT_PCMIN [6]
GPIO18_RESET_BT [6]
BT_PCMSYNC [6]

R210 10K
R212 10K

ED[15:0] [2]
EA[23:0]
/ECS1 [2]
/ECS0 [2]
/WR [2]
/RD [2]
/UB [2]
/LB [2]
GPIO30_EIGHT_EN [3]
EA23 [2]

U202
TV00578002AABD
R223 0R
R224 0R
VMEM [2]
EA24 [2]
R227 NC
VMEM [2]
/RD [2]
/ECS0 [2]
/ECS1 [2]
VMEM [2]
/WR [2]
/LB [2]
/UB [2]
/WATCHDOG [2]
EA23 [2]

C207 100nF
C208 100nF
C209 100nF
C210 100nF
C213 100nF
C214 100nF
VMEM
VCORE
VDD
AVDD

U201-B
MT6223_224
MT6223
B201 BLM18HD102SN1D
R201 0R

MP3_OUTL [6]
MP3_OUTR [6]
FMINL
FMINR
6223_RECN0 [3]
6223_RECP0 [3]
MICBIASP [3]
MICBIASN [3]
MICP0 [3]
MICN0 [3]
MICN1 [3]
MICP1 [3]
C256 2.2uF

U201-C
MT6223
C253 100nF
VAFC [1]
VAPC [1]
IB [1]
QB [1]
I [1]
Q [1]
ADC2_MIC [3]

Manufacture Test Point
TP202 VBAT
TP203 POWERON [2,4]
TP204
TP205 TXD1 [2,5]
TP206 RXD1 [2,5]

J201 PAN31-03683-3000
TP201
VBAT [1,2,3,4,5,6]
T202
C261 33pF
C262 8.2pF

U201-D
C212 4.7uF
C227 8.2pF
C202 33pF
C215 1uF
C216 100nF
C217 1uF
C218 4.7uF
C219 100nF
C220 4.7uF
C221 4.7uF
C223 4.7uF
C228 4.7uF
C230 100nF
C250 10uF
C268 4.7uF
C270 33pF
C260 100nF
C271 33pF
R202 4.7K
R234 100K
R203 4.7K
R211 10K
R233 4.7K
R280 4.7K
B206 0R(0603)
B203 6.8R(0603)
R5 0R(0603)
U204 NTHD4P02FT1G
VCHG [2,5]
LED_B
LED_KEYPAD [4]
LED [3] [6]
VRF_TRACE>15MIL
VRF_SENSE=I * 1 Ω 0.5W
VRF [3]
VRF_SENS [3]
SIMRST [6]
SIMCLK [6]
SIMIO [6]
VCORE
VDD
AVDD
VMEM
POWERON [2,4]
/SYSRST [2,5]
MOTO TP_6.0X2.5
MOTO2 TP_6.0X2.5
VBAT

J202 PJ1-22001CJ
T203
VCHG

VMSEL(E4)	VMEN
H	2.8v
L	1.8v

Voltage	voltage	Max(mA)
Vcore	1.8V	200mA
VDD	2.8V	100mA
AVDD	2.8V	125mA
VMEM	2.8V/1.8V	75mA
VRTC	1.5V	0.6mA
VSIM	3V	20mA
VRF_23_X	2.8V	250mA
VTCXO	2.8V	20mA

C264 100nF
C265 1uF
VMEM

COMPANY:
TITLE:

DRAWN: <Drawn By>	DATED: Dec 11 2009
CHECKED: <Checked By>	DATED: <Checked Date>
QUALITY CONTROL: <QC By>	DATED: <QC Date>
RELEASED: <Released By>	DATED: <Release Date>

CODE:	SIZE:	DRAWING NO:	REV:
<Code>	A1	<Drawing Number>	P6

SCALE: <Scale> SHEET: 7 OF 6

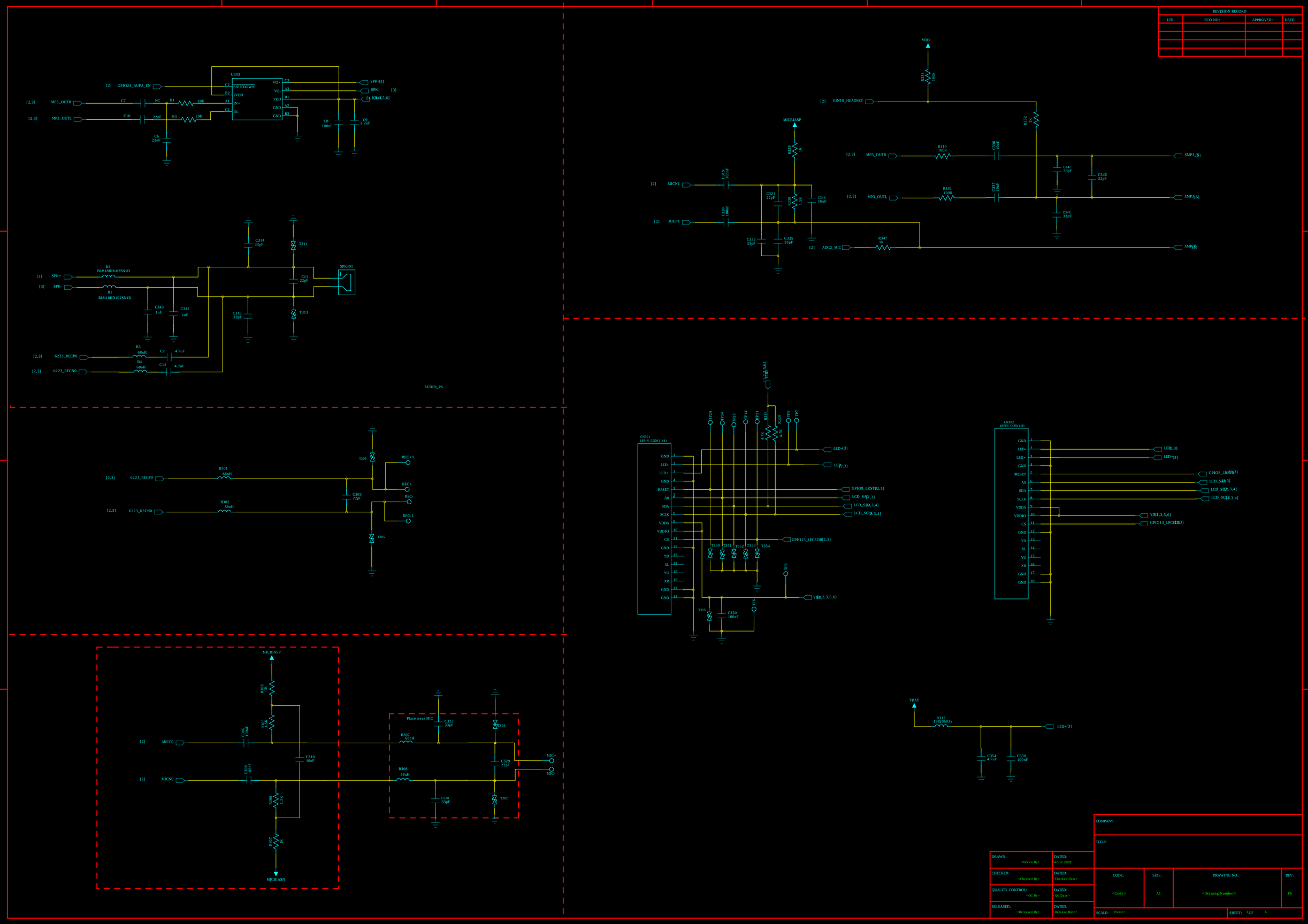

DRAWN: <Drawn By>	DATED: Dec.11 2009	COMPANY:	
CHECKED: <Checked By>	DATED: <Checked Date>	TITLE:	
QUALITY CONTROL: <QC By>	DATED: <QC Date>	CODE: <Code>	SIZE: A1
RELEASED: <Released By>	DATED: <Release Date>	DRAWING NO: <Drawing Number>	REV: P6
		SCALE: <Scale>	SHEET: 3 OF 6

¿ ª » ú ¼ ü

S447
KEY_D5.6
POWERON[2]
T401

[2] KCOL3
[2] KCOL2
[2] KCOL1
[2] KCOL0
C401 33pF
C402 33pF
C403 33pF
C404 33pF

[2] KROW0
[2] KROW1
[2] KROW2
[2] KROW3
[2] KROW4

S401 KEY_D5.6
UP S402 KEY_D5.6
down S403 KEY_D5.6
END S404 KEY_AX5
S405 KEY_D5.6
LOST_right S409 KEY_AX5
right S406 KEY_D5.6
left S408 KEY_AX5
1 S407 KEY_AX5
2 S410 KEY_AX5
3 S411 KEY_D6/.5
S413 KEY_D5.6
S412 KEY_D5.6
2 S414 KEY_D5.6
5 S415 KEY_D5.6
8 S416 KEY_D5.6
S421 KEY_D5.6
S422 KEY_D5.6
S423 KEY_D5.6
S451 KEY_D5.6

T410 T411
VBAT
{1,2,3,4,5,6}
C460 33pF
R410 10R
C461 33pF
[2] GPIO30_EIGHT_EN
DTC114EM3T5G Q401
R4 4.7K

[2] LED_KEYPAD
D401 LED-0603
D402 LED-0603
D403 LED-0603
D404 LED-0603
D405 LED-0603
D406 LED-0603
100R R406
100R R407
[1,2,3,4,5,6]

AGND[2,6]
IO2.8V_CAMERA
2V8_CAMERA
R416 0R
B401 BLM15BB750SN1D
C420 4.7uF

CN402
AGND
VDDMD
SSN
CTS
VDDD
IIC_SDA
SYSCLK
SPI_SCLK
VSSQ
SPI_SDO
DVERFLOW_MASTER
DVERFLOW_SLAVE
VDDA
IIC_SCL
SPI_CSB
RSTIN
24PIN_CON
R410 0R
C441 33pF
C415 1uF
2V8_CAMERA [4]
VCORE [2]
R401 0R
GPIO26_CAM_VHSE[2]
GPIO46_MUX_SD/[2,6]
GPIO49_CAM_MMCLK[2]
R402 0R
LCD_SCLK [2,3]
R403 0R
LCD_SDA[2,3]
R404 0R
GPIO43_CAM_FLOW[2]
R412 0R
GPIO27_CAM_READY[2]
IO2.8V_CAMERA[4]
GPIO45_MUX_SCL[2,6]
C418 1uF
R405 10R
2V8_CAMERA[4]
C434 1uF
R6 0R
GPIO32_CAM_CS [2]
R7 NC
FMGPIO1_CAM_CS[6]

REVISION RECORD			
LTR	ECO NO:	APPROVED:	DATE:

10 + GND

SIM SHIFT SWITCH

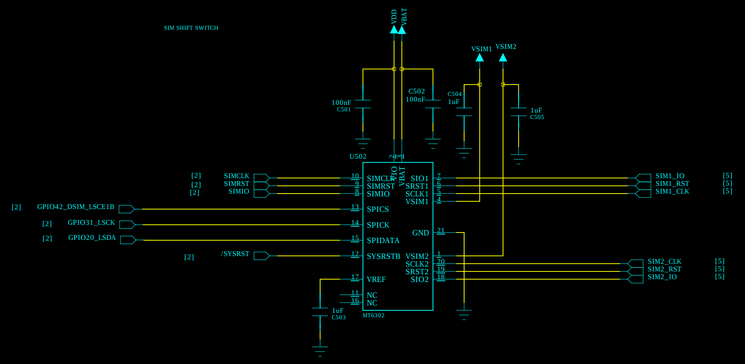

Master SIM

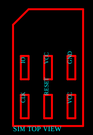

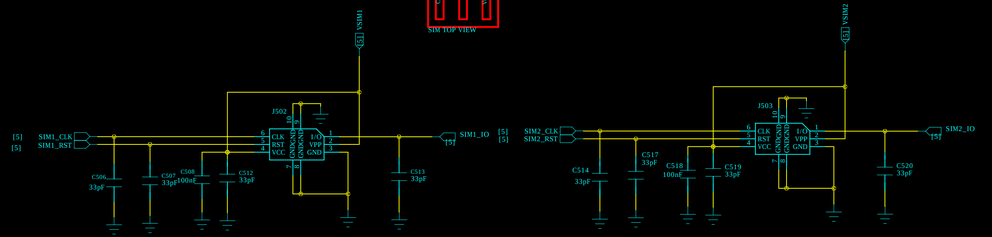

Slave SIM

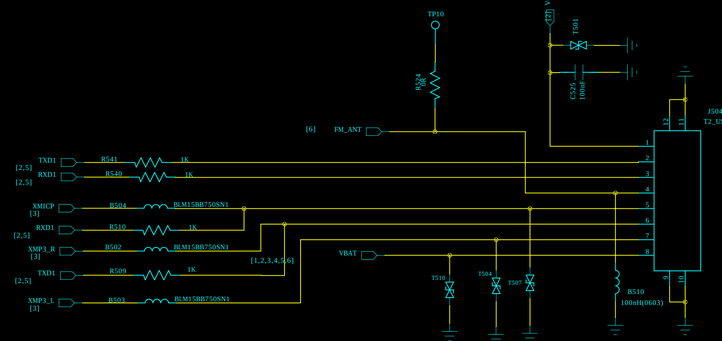

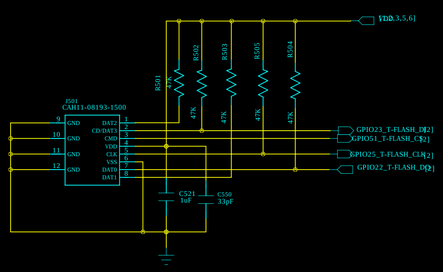

COMPANY:			
TITLE:			
DRAWN: <Drawn By>	DATED: Jul 11 2009		
CHECKED: <Checked By>	DATED: <Checked Date>		
QUALITY CONTROL: <QC By>	DATED: <QC Date>		
RELEASED: <Released By>	DATED: <Release Date>		
CODE: <Code>	SIZE: A1	DRAWING NO: <Drawing Number>	REV: P6
SCALE: <Scale>	SHEET: 5 OF 6		

REVISION RECORD			
LTR	ECO NO:	APPROVED:	DATE:

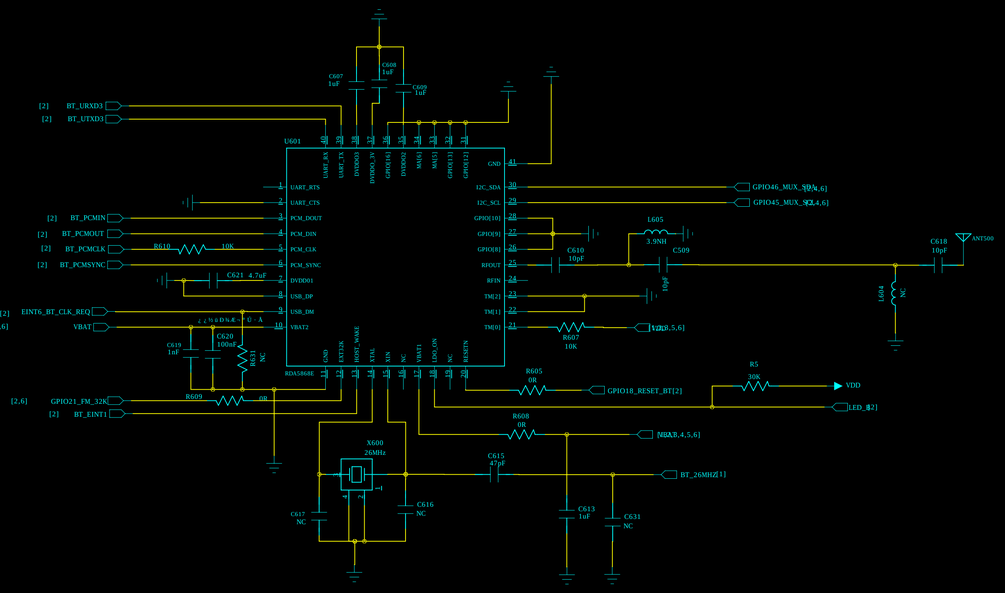

COMPANY:			
TITLE:			
DRAWN: <Drawn By>	DATED: Dec 11 2009		
CHECKED: <Checked By>	DATED: <Checked Date>		
QUALITY CONTROL: <QC By>	DATED: <QC Date>		
RELEASED: <Released By>	DATED: <Release Date>		
CODE: <Code>	SIZE: A1	DRAWING NO: <Drawing Number>	REV: P6
SCALE: <Scale>		SHEET: 6 OF 6	