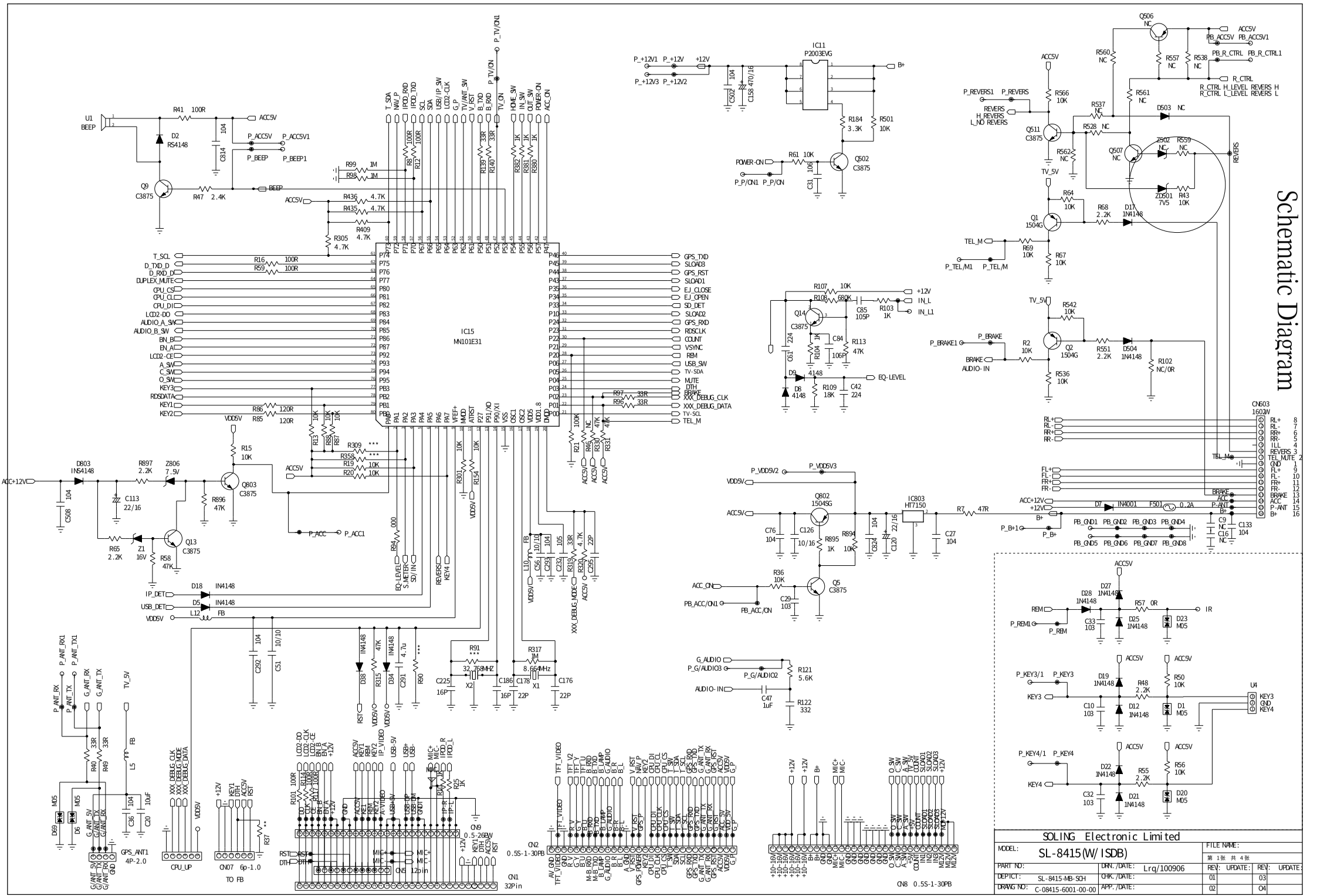
Schematic Diagram
IC15
MN101E31
IC11
P2003EVG
Q506
NC
Q511
C3875
Q507
NC
Q1
1504G
Q2
1504G
Q14
C3875
D9
4148
D8
4148
Q803
C3875
Q13
C3875
Q802
1504SG
IC803
HT7150
Q5
C3875
Q502
C3875
D803
IN54148
D18
IN4148
D5
IN4148
D27
1N4148
D28
1N4148
D19
1N4148
D22
1N4148
D12
1N4148
D25
1N4148
D21
1N4148
D23
M05
D20
M05
D1
M05
U4
KEY3
KEY4
CN603
1602W
CN15
0.5-26BW
CN2
0.5S-1-30PB
CN8
0.5S-1-30PB
CN1
32Pin
CN5
12pin
CN07
6p-1.0
TO FB
CPU_UP
GPS_ANT1
4P-2.0
SOLING Electronic Limited
MODEL:
SL-8415(W/ISDB)
FILE NAME:
第 1张 共 4张
PART NO:
DRN./DATE:
Lrq/100906
REV: UPDATE:
DEPICT:
SL-8415-MB-SCH
CHK./DATE:
01
DRAWG NO:
C-08415-6001-00-00
APP./DATE:
02

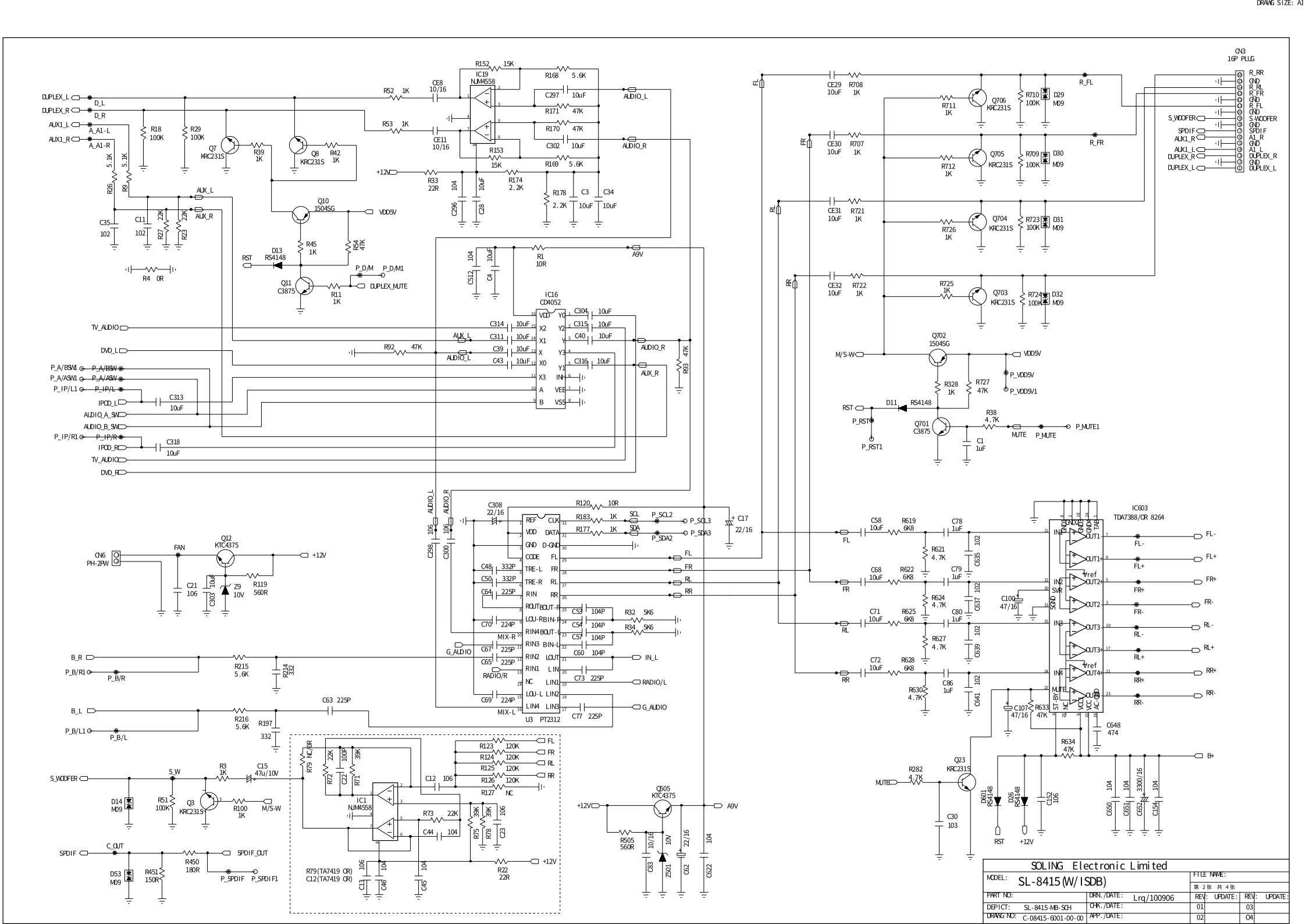

SOLING Electronic Limited		FILE NAME:	
MODEL: SL-8415(W/ISDB)		第 2 张 共 4 张	
PART NO:	DRN./DATE: Lrq/100906	REV: UPDATE:	REV: UPDATE:
DEPICT: SL-8415-MB-SCH	CHK./DATE:	01	03
DRAWG NO: C-08415-6001-00-00	APP./DATE:	02	04

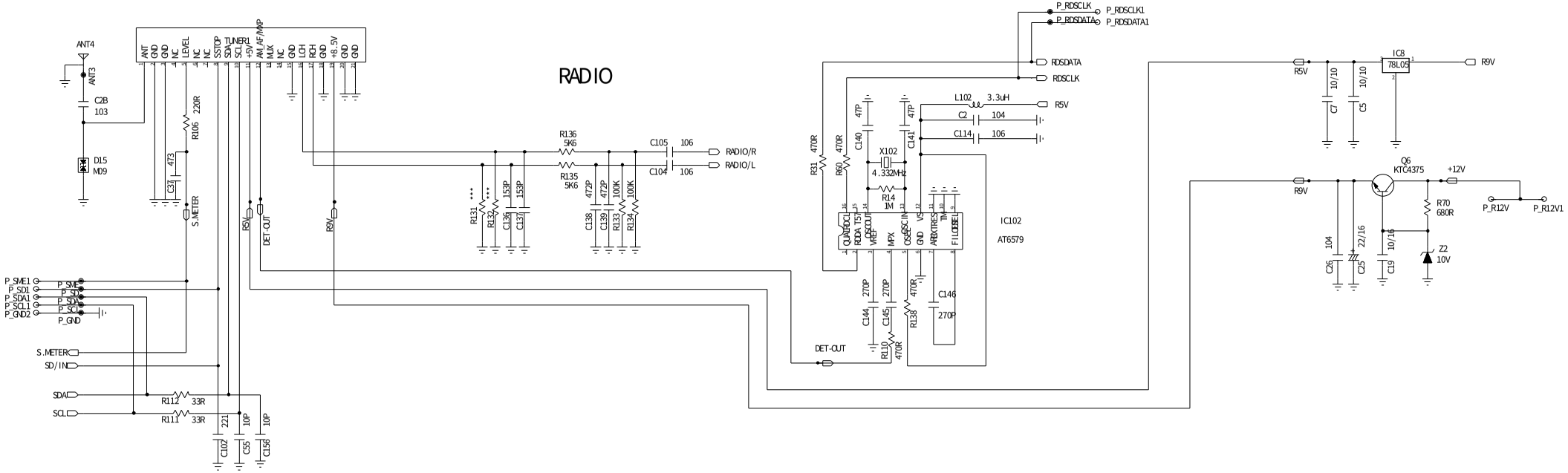

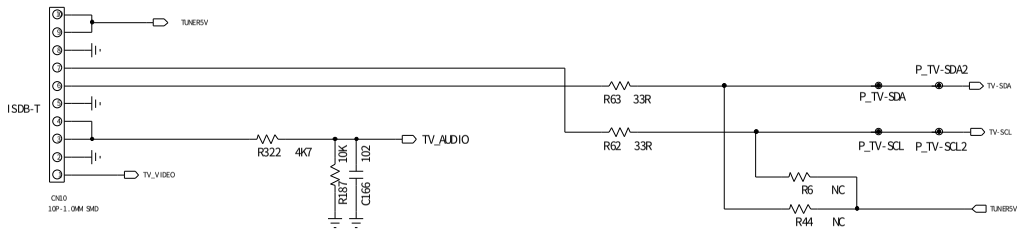

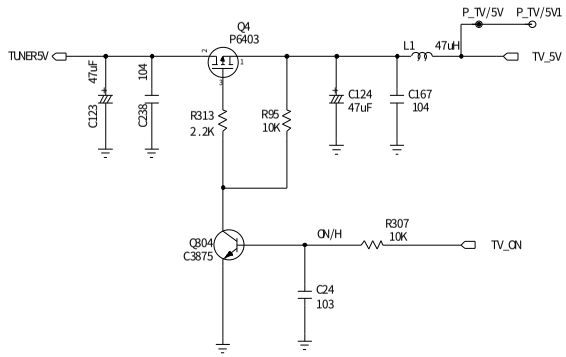

SOLING Electronic Limited					
MODEL: SL-8415(W/ISDB)			FILE NAME:		
			第 3张 共 4张		
PART NO:	DRN./DATE: Lrq/100906		REV:	UPDATE:	REV: UPDATE:
DEPICT: SL-8415-MB-SCH	CHK./DATE:		01		03
DRAWG NO: C-08415-6001-00-00	APP./DATE:		02		04

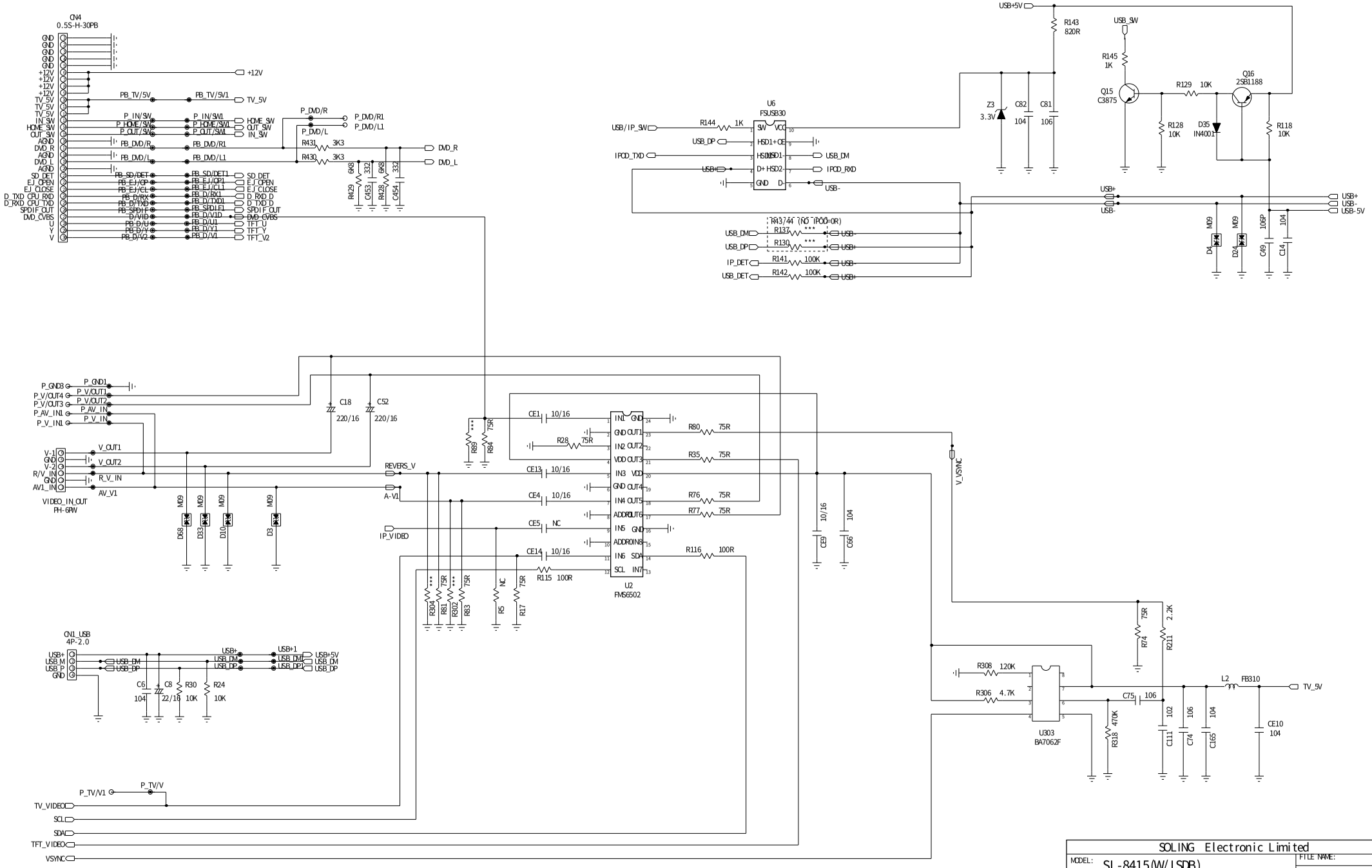

SOLING Electronic Limited			
MODEL: SL-8415(W/ISDB)		FILE NAME:	
		第 4张 共 4张	
PART NO:	DRN./DATE: Lrq/100906	REV: UPDATE:	REV: UPDATE:
DEPICT: SL-8415-MB-SCH	CHK./DATE:	01	03
DRAWG NO: C-08415-6001-00-00	APP./DATE:	02	04

DRAWG SIZE: A1

SOLING Electronic Limited

MODEL: SL-8412

FILE NAME:

FILE NO: 第 2 张 共 2 张

PART NO:	DRN./DATE: Lrq/100830	REV| UPDATE: 01	REV| UPDATE: 03
DESCRIPTION: SL-8412-SB-SCH	CHK./DATE:	02	04
DRAWG NO: C-09412-6007-00-00	APP./DATE:		

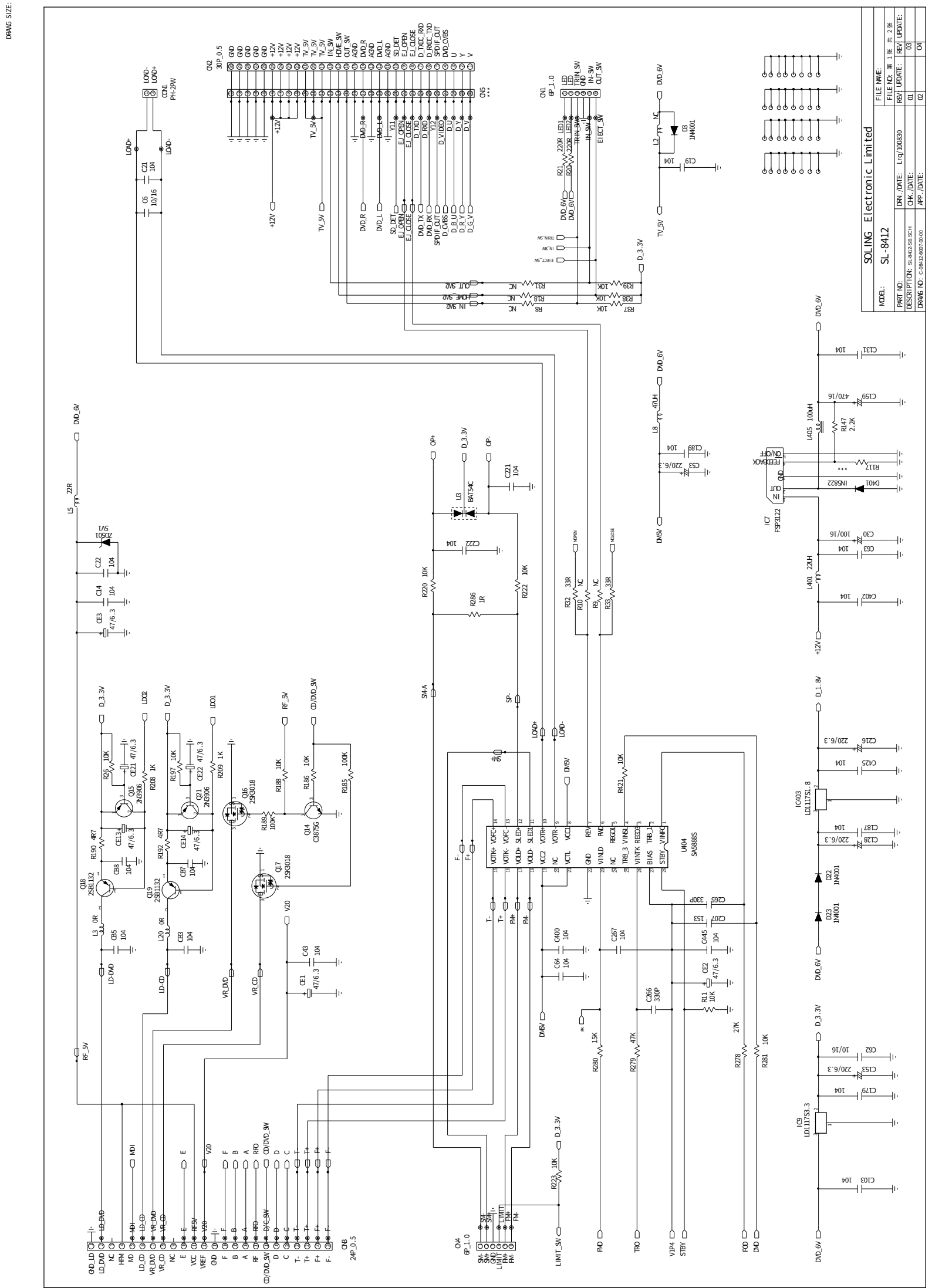
SOLING Electronic Limited
MODEL: SL-8412
FILE NAME:
FILE NO: 第 1 張 共 2 張
PART NO:
DESCRIPTION: SL-8412-SB.SCH
DRAWING NO: C-08412-0007-00-00
DRN./DATE: Lrq/100830
CHK./DATE:
APP./DATE:
REV| UPDATE: | REV| UPDATE:
01 | 03
02 | 04
DRAWG SIZE: A1
CN2 30P_0.5
CN1 PH-2PW
CN5 ***
CN4 6P_1.0
CN8 24P_0.5
CN1 6P_1.0
U4 SA5888S
IC7 FSP3122
IC403 LD1117S1.8
IC9 LD1117S3.3
U3 BAT54C
D401 IN5822
D2 1N4001
D23 1N4001
D3 1N4001
Q15 2N3906
Q21 2N3906
Q16 2SK3018
Q17 2SK3018
Q14 C3875G
Q18 2SB1132
Q19 2SB1132
SW1 ZD5D1
LOAD+
LOAD-
DVD_6V
D_3.3V
TV_5V
+12V
RF_5V
CD/DVD_5V
DVD_R
DVD_L
SD_DET
EJ_OPEN
EJ_CLOSE
D_TXD
D_RXD
D_TXC_RXD
D_RXC_TXD
SPDIF_OUT
D_CVBS
D_VIDEO
D_B_U
D_R_V
D_G_Y
TRIN_SW
IN_SW
EJECT_SW
OUT_SW
LED
LED1
LED2
OP+
OP-
SM+
SM-
SP+
SP-
LIMIT_SW
PWD
TRO
VLP4
STBY
FOD
DVD
LD-DVD
LD-CD
VR_DVD
VR_CD
MDI
RFO
VCC
RF5V
VREF
GND
F
B
A
D
C
T-
T+
F+
F-
V20
VM
VP
VN
VOFC+
VOFC-
VOLD+
VOLD-
VOTR+
VOTR-
VCC1
VCC2
VCTL
GND
VINLD
REGO1
TRB_3
VINSL
VINTK
REGO3
BIAS
TRB_1
STBY
VINFC
REV
FWD
NC
FEEDBACK
ON/OFF
GND
IN
OUT

DRAWG SIZE: A4

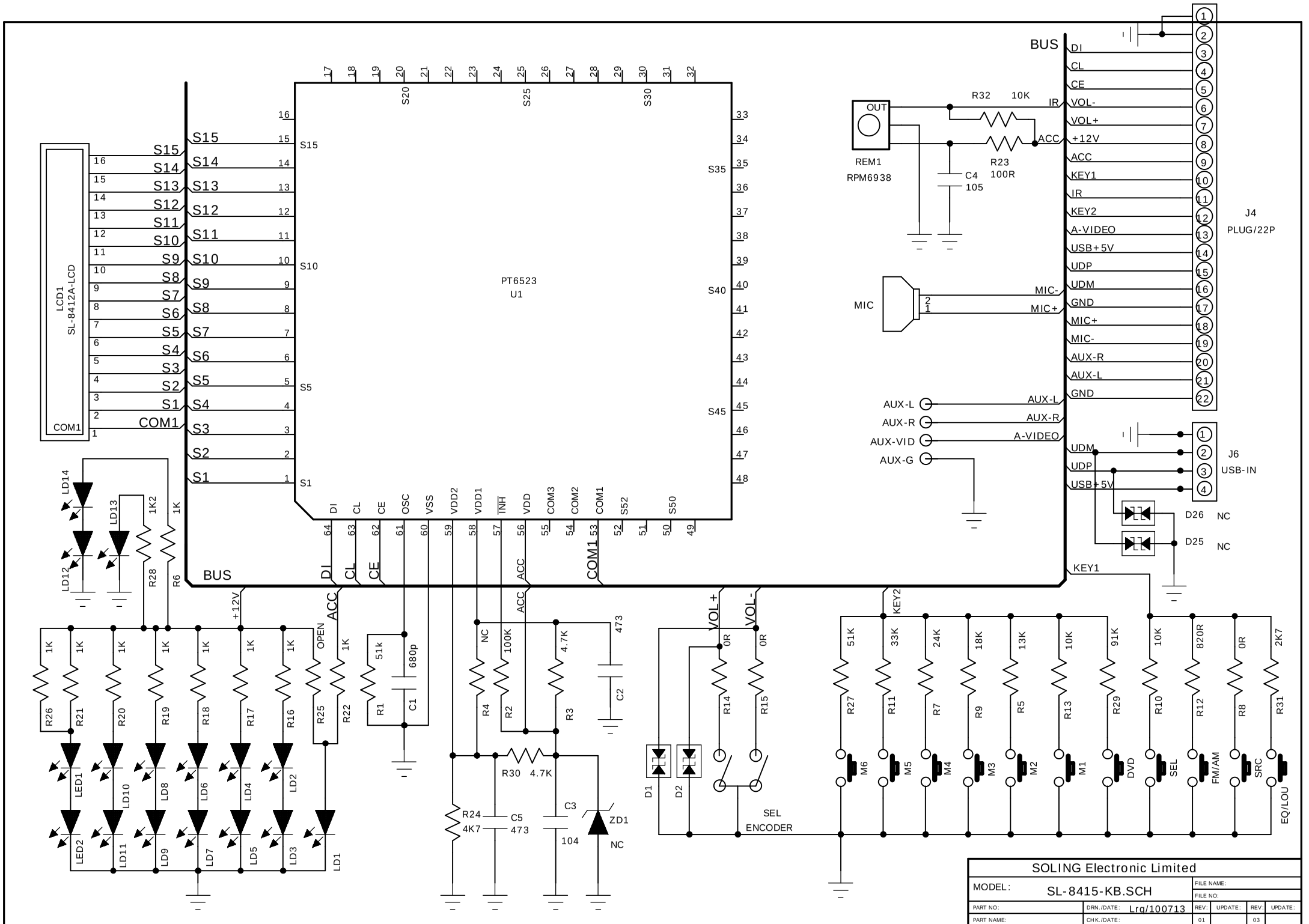

SOLING Electronic Limited					
MODEL: SL-8415-KB.SCH		FILE NAME:			
		FILE NO:			
PART NO:	DRN./DATE: Lrq/100713	REV:	UPDATE:	REV:	UPDATE:
PART NAME:	CHK./DATE:	01		03	
DRAWG NO:	APP./DATE:	02		04	

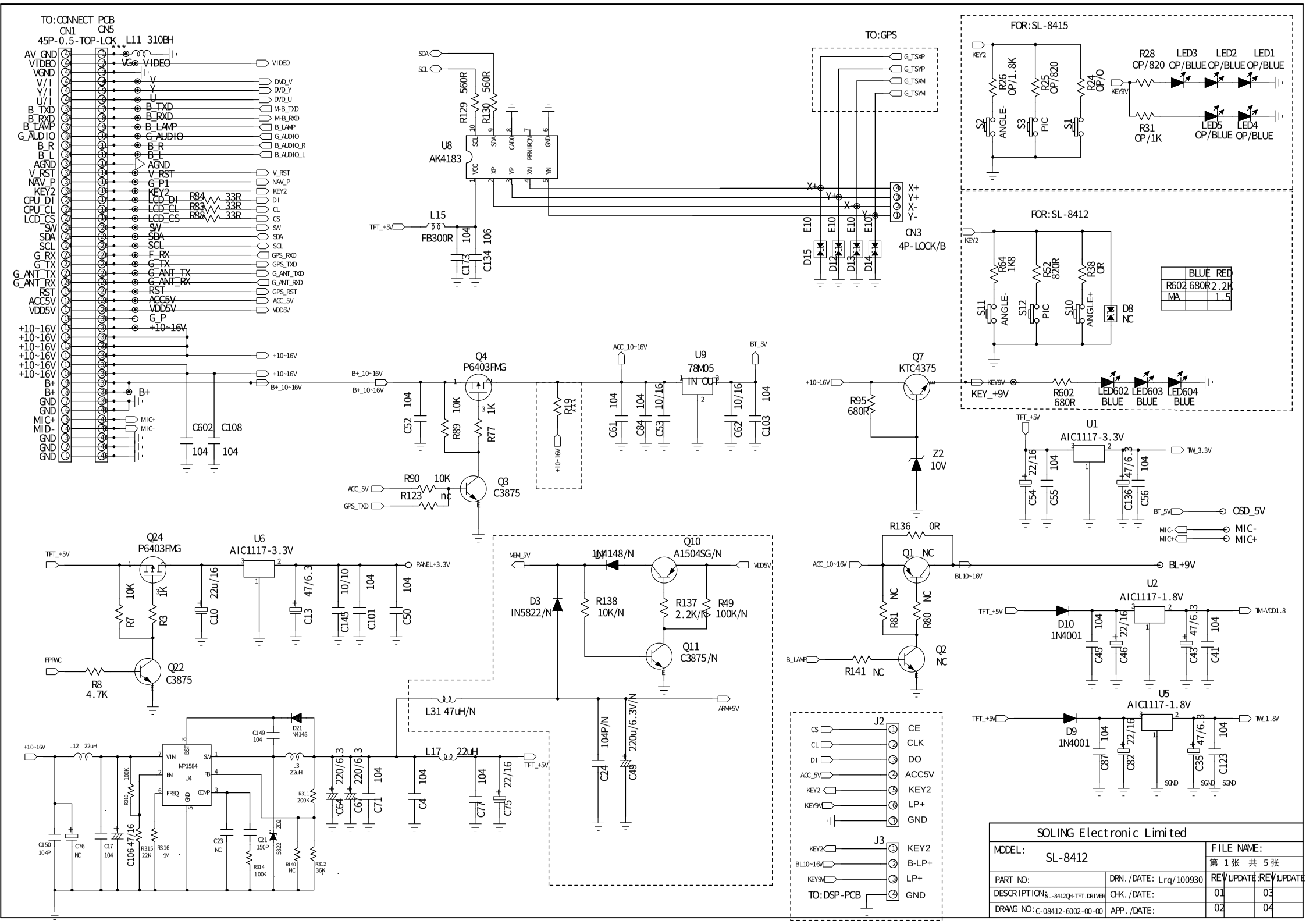
TO:CONNECT PCB
CN1 CN5
45P-0.5-TOP-LOCK_L11 310BH
AV_GND VIDEO VGND V/I Y/I U/I B_TXD B_RXD B_LAMP G_AUDIO B_R B_L AGND V_RST NAV_P KEY2 CPU_DI CPU_CL LCD_CS SW SDA SCL G_RX G_TX G_ANT_TX G_ANT_RX RST ACC5V VDD5V G_P +10~16V
VIDEO DVD_V DVD_Y DVD_U M-B_TXD M-B_RXD B_LAMP G_AUDIO B_AUDIO_R B_AUDIO_L V_RST NAV_P KEY2 DI CL CS SW SDA SCL GPS_RXD GPS_TXD G_ANT_TXD G_ANT_RXD GPS_RST ACC_5V VDD5V
R84 33R
R83 33R
R88 33R
B+ MIC+ MIC-
C602 104
C108 104
TO:GPS
G_TSXP G_TSYP G_TSXM G_TSYM
SDA SCL
R129 560R
R130 560R
U8
AK4183
VCC XP YP XN YN SCL SDA CADD PENIRQ GND
L15
FB300R
TFT_+5V
C173 104
C134 106
X+ Y+ X- Y-
CN3
4P-LOCK/B
E10 D15 D12 D13 D14
FOR:SL-8415
KEY2
R26 OP/1.8K
R25 OP/820
R24 OP/0
S2 ANGLE-
S3 PIC
S1
KEY9V
R28 OP/820
LED3 OP/BLUE
LED2 OP/BLUE
LED1 OP/BLUE
R31 OP/1K
LED5 OP/BLUE
LED4 OP/BLUE
FOR:SL-8412
KEY2
R64 1K8
R52 820R
R38 OR
S11 ANGLE-
S12 PIC
S10 ANGLE+
D8 NC
BLUE RED
R602 680R 2.2K
MA 1.5
Q4
P6403FMG
B+_10~16V
C52 104
R89 10K
R77 1K
R19 ***
+10~16V
ACC_10~16V
C61 104
C84 104
C53 10/16
U9
78M05
IN OUT
C62 10/16
BT_5V
C103 104
Q3
C3875
R90 10K
R123 nc
ACC_5V
GPS_TXD
Q7
KTC4375
R95 680R
Z2 10V
KEY_+9V
R602 680R
LED602 BLUE
LED603 BLUE
LED604 BLUE
U1
AIC1117-3.3V
TFT_+5V
C54 22/16
C55 104
C136 47/6.3
C56 104
TW_3.3V
BT_5V
OSD_5V
MIC-
MIC+
Q24
P6403FMG
U6
AIC1117-3.3V
TFT_+5V
R7 10K
R3 1K
C10 22u/16
C13 47/6.3
C145 10/10
C101 104
C50 104
PANEL+3.3V
FPPWC
Q22
C3875
R8 4.7K
MEM_5V
D3 IN5822/N
D4 IN4148/N
Q10
A1504SG/N
VDD5V
R138 10K/N
R137 2.2K/N
R49 100K/N
Q11
C3875/N
L31 47uH/N
ARM+5V
R136 0R
Q1 NC
ACC_10~16V
BL10~16V
BL+9V
R81 NC
R80 NC
Q2
NC
B_LAMP
R141 NC
U2
AIC1117-1.8V
TFT_+5V
D10 1N4001
C45 104
C46 22/16
C43 47/6.3
C41 104
TM-VDD1.8
U5
AIC1117-1.8V
TFT_+5V
D9 1N4001
C87 104
C82 22/16
C35 47/6.3
C123 104
TW_1.8V
SGND
+10~16V
L12 22uH
U4
MP1584
VIN SW BST EN FB FREQ COMP GND
C149 104
D21 IN4148
L3 2.2uH
L17 22uH
TFT_+5V
C64 220/6.3
C67 220/6.3
C71 104
C4 104
C77 104
C75 22/16
C24 104P/N
C49 220u/6.3V/N
R310 100K
R311 200K
R315 22K
R316 3M
R314 100K
R312 36K
R140 NC
C150 104P
C76 NC
C17 104
C106 47/16
C23 NC
C21 150P
ZD2 SB22
J2
CS CL DI ACC_5V KEY2 KEY9V
CE CLK DO ACC5V KEY2 LP+ GND
J3
KEY2 BL10~16V KEY9V
KEY2 B-LP+ LP+ GND
TO:DSP-PCB
SOLING Electronic Limited
MODEL: SL-8412
FILE NAME:
第 1张 共 5张
PART NO:
DRN./DATE: Lrq/100930
REV/UPDATE:
DESCRIPTION: SL-8412CH-TFT..DRIVER
CHK./DATE:
01 03
DRAWG NO: C-08412-6002-00-00
APP./DATE:
02 04

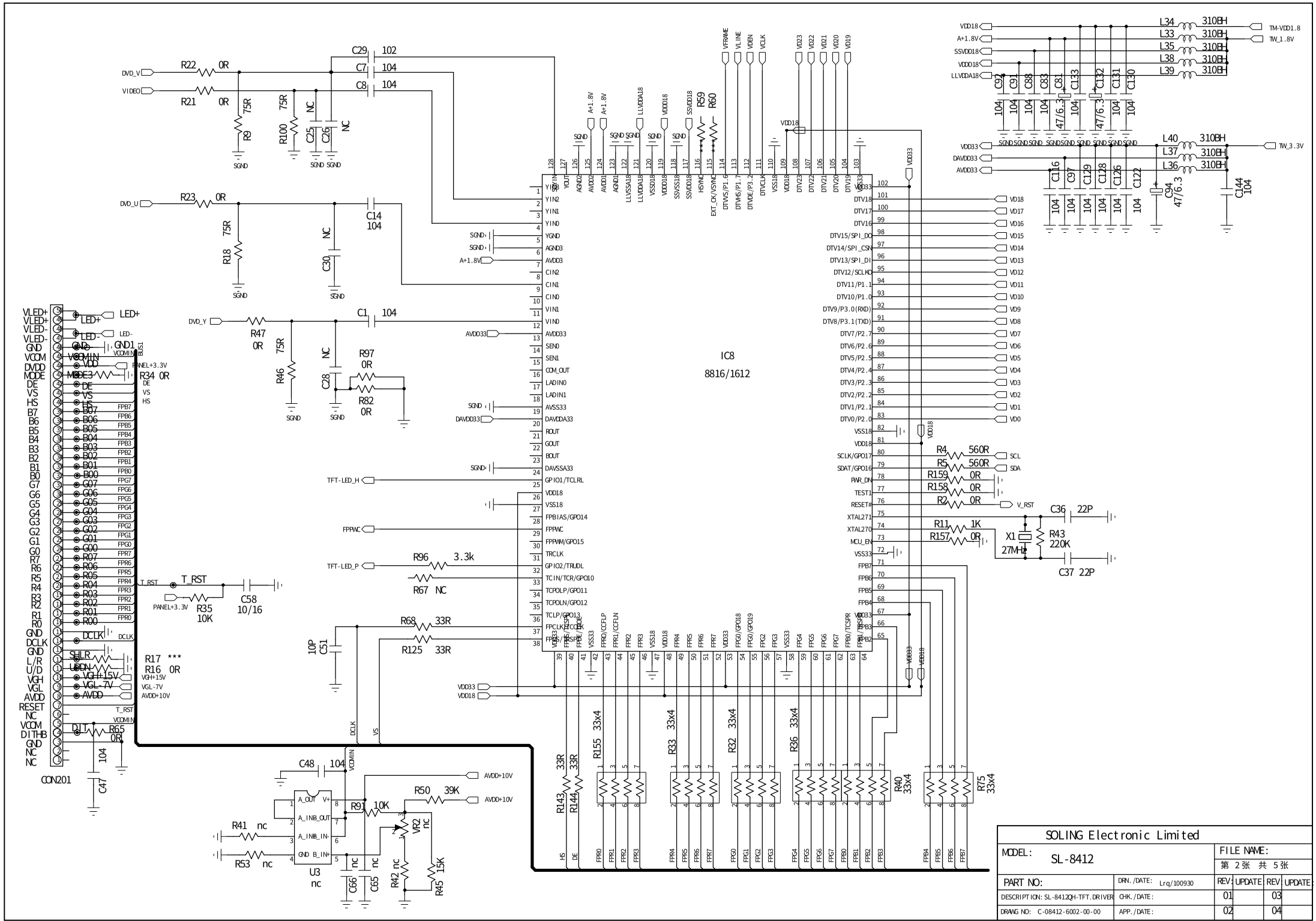
IC8
8816/1612
CON201
U3
nc
SOLING Electronic Limited
MODEL: SL-8412
FILE NAME:
第 2张 共 5张
PART NO:
DRN./DATE: Lrq/100930
DESCRIPTION: SL-8412QH-TFT.DRIVER
CHK./DATE:
DRAWG NO: C-08412-6002-00-00
APP./DATE:
REV: UPDATE: REV: UPDATE:
01 03
02 04

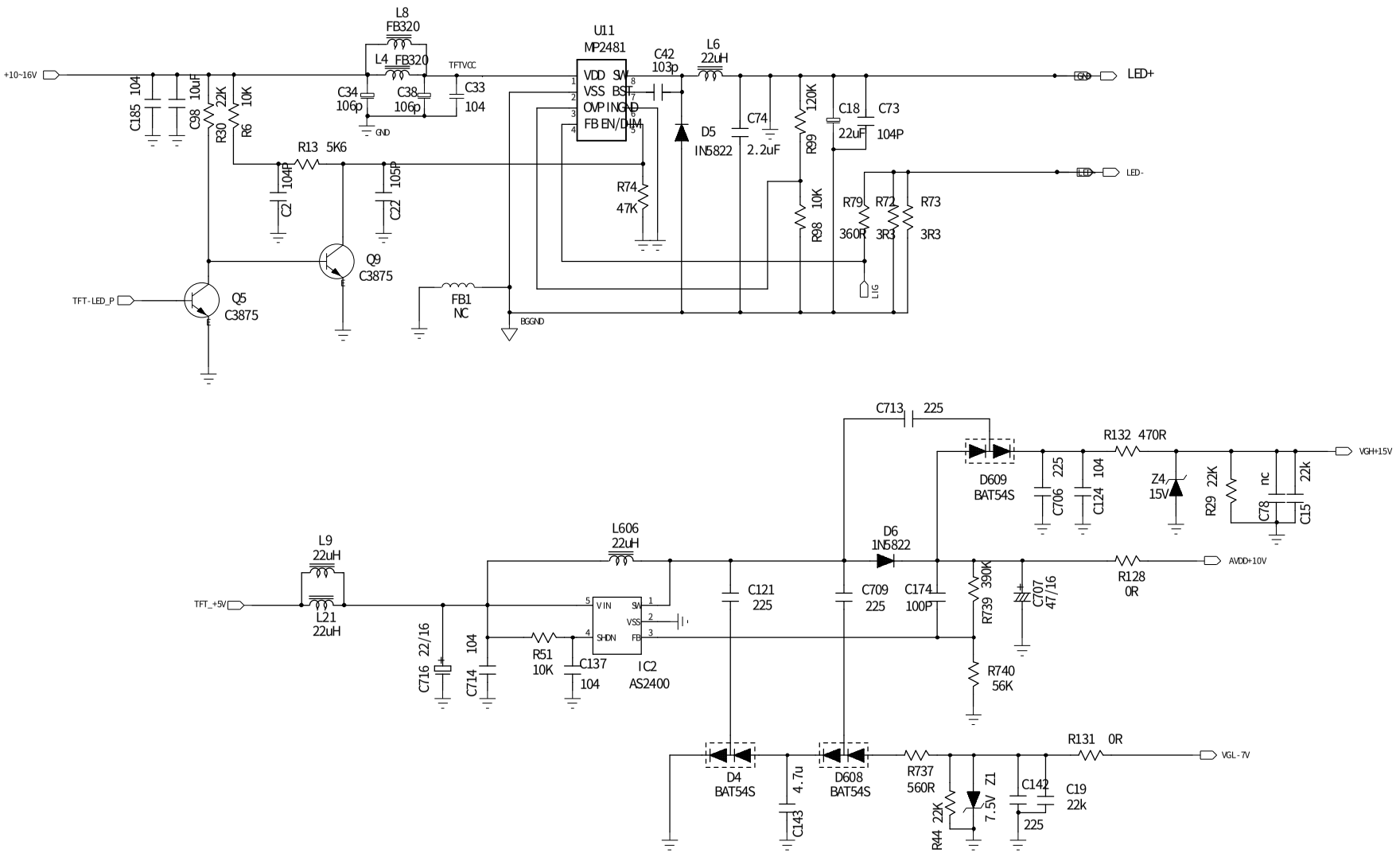

SOLING Electronic Limited					
MODEL: SL-8412		FILE NAME:			
		第 3张 共 5张			
PART NO:	DRN./DATE: Lrq/100930	REV:	UPDATE:	REV:	UPDATE:
DESCRIPTION: SL-8412QH-TFT.DRIVER	CHK./DATE:	01		03	
DRAWG NO: C-08412-6002-00-00	APP./DATE:	02		04	

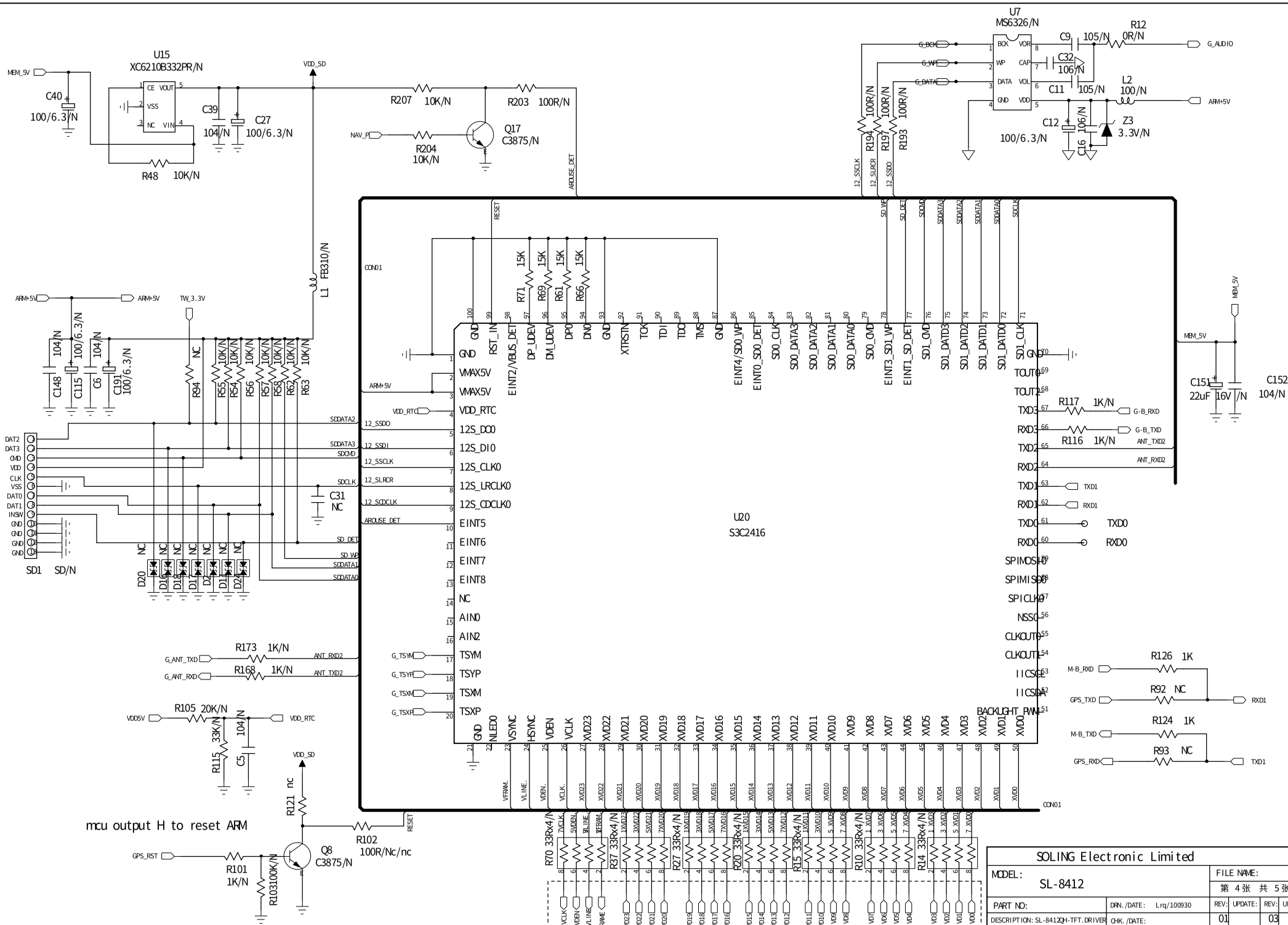
U15
XC6210B332PR/N
U7
MS6326/N
U20
S3C2416
Q17
C3875/N
Q8
C3875/N
Z3
3.3V/N
L1 FB310/N
L2
100/N
C40
100/6.3/N
C39
104/N
C27
100/6.3/N
R48 10K/N
R207 10K/N
R203 100R/N
R204
10K/N
R194 100R/N
R197 100R/N
R193 100R/N
C9 105/N
R12
0R/N
C32
106/N
C11 105/N
C12
100/6.3/N
C16 106/N
C148 104/N
C115 100/6.3/N
C6 104/N
C191 100/6.3/N
R94 NC
R55 10K/N
R54 10K/N
R56 10K/N
R57 10K/N
R58 10K/N
R62 10K/N
R63 10K/N
C31
NC
SD1 SD/N
D20 NC
D16 NC
D18 NC
D17 NC
D2 NC
D11 NC
D24 NC
R71 15K
R69 15K
R61 15K
R66 15K
R117 1K/N
R116 1K/N
C151
22uF 16V /N
C152
104/N
R173 1K/N
R168 1K/N
R105 20K/N
R115 33K/N
C5 104/N
R121 nc
R102
100R/Nc/nc
R101
1K/N
R103100K/N
R126 1K
R92 NC
R124 1K
R93 NC
R70 33Rx4/N
R37 33Rx4/N
R27 33Rx4/N
R20 33Rx4/N
R15 33Rx4/N
R10 33Rx4/N
R14 33Rx4/N
mcu output H to reset ARM
TO:TW8816
SOLING Electronic Limited
MODEL: SL-8412
FILE NAME:
第 4 张 共 5 张
PART NO:
DRN./DATE: Lrq/100930
DESCRIPTION: SL-8412QH-TFT.DRIVER
CHK./DATE:
DRAWG NO: C-08412-6002-00-00
APP./DATE:
REV: UPDATE: REV: UPDATE:
01 03
02 04

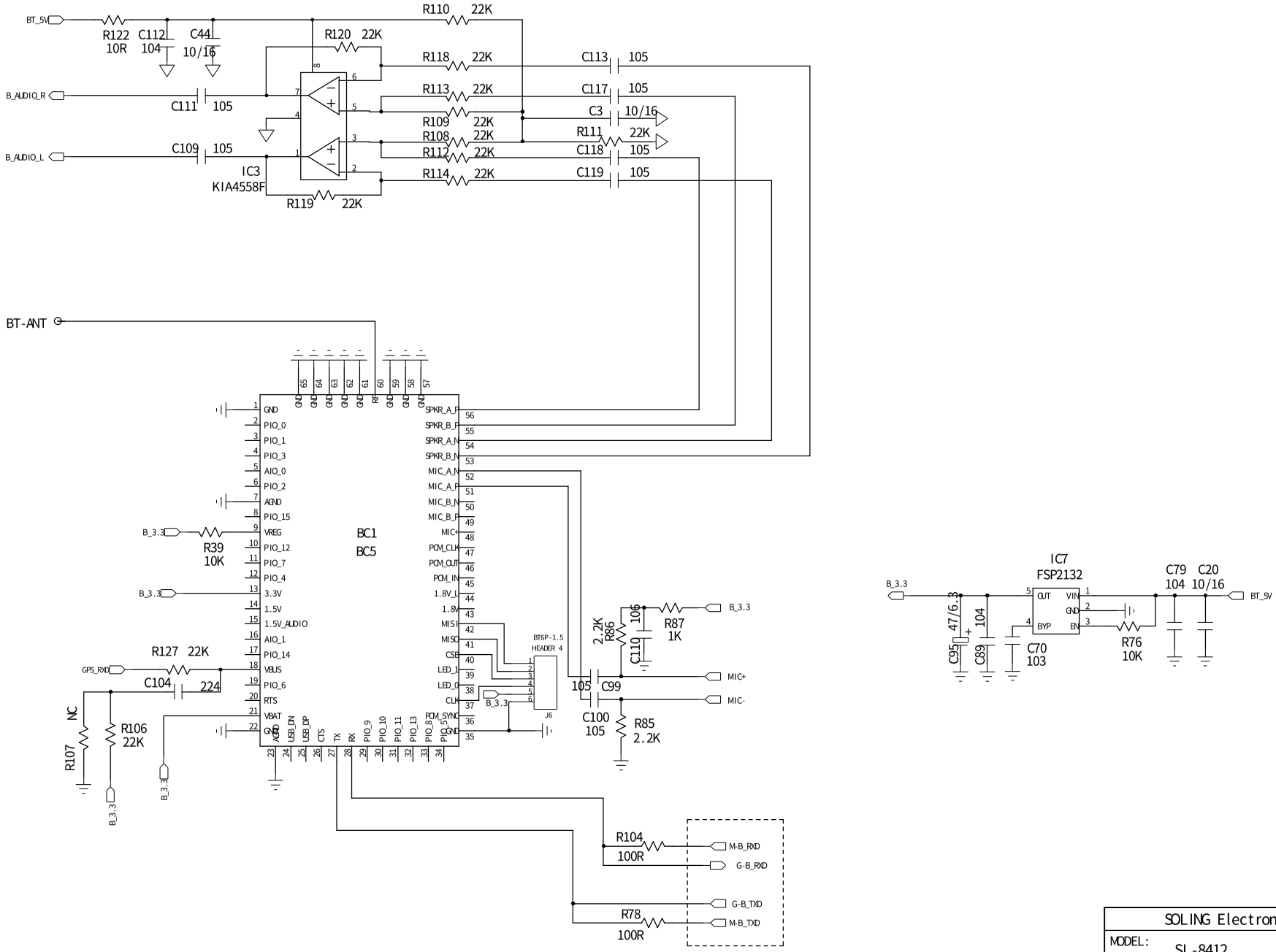

SOLING Electronic Limited			
MODEL: SL-8412		FILE NAME:	
		第 5 张 共 5 张	
PART NO:	DRN./DATE: Lrq/100930	REV:	UPDATE: REV: UPDATE
DESCRIPTION: SL-8412QH-TFT.DRIVER	CHK./DATE:	01	03
DRWG NO: C-08412-6002-00-00	APP./DATE:	02	04