CEDARVIEW PROCESSOR (DMI)

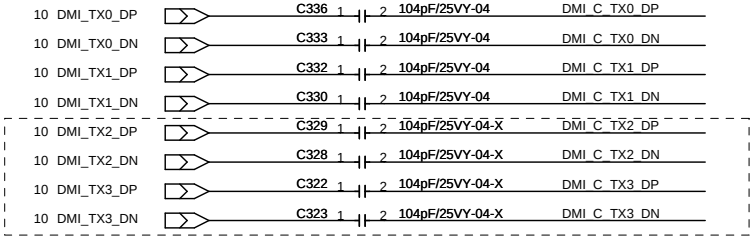

Cedarview M: remove these capacitors to support DMI x2.
Cedarview D: Solder these capacitors to support DMI x4.

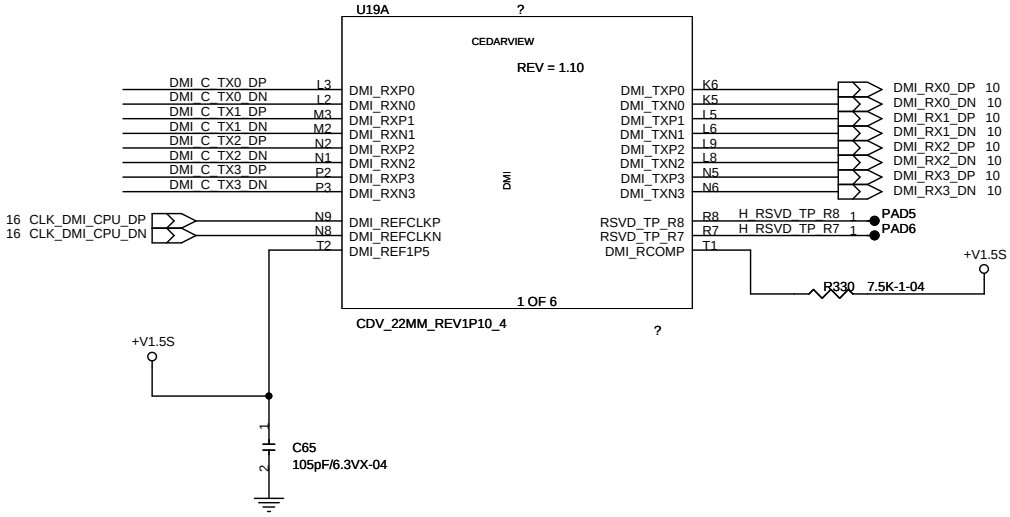

Winmate Communication INC.			
Title: CPU DMI			
Size: B	Document Number: ID8HH		Rev: 100
Date: Friday, January 25, 2013	Sheet 3 of 44		

CEDARVIEW PROCESSOR (DDR3)

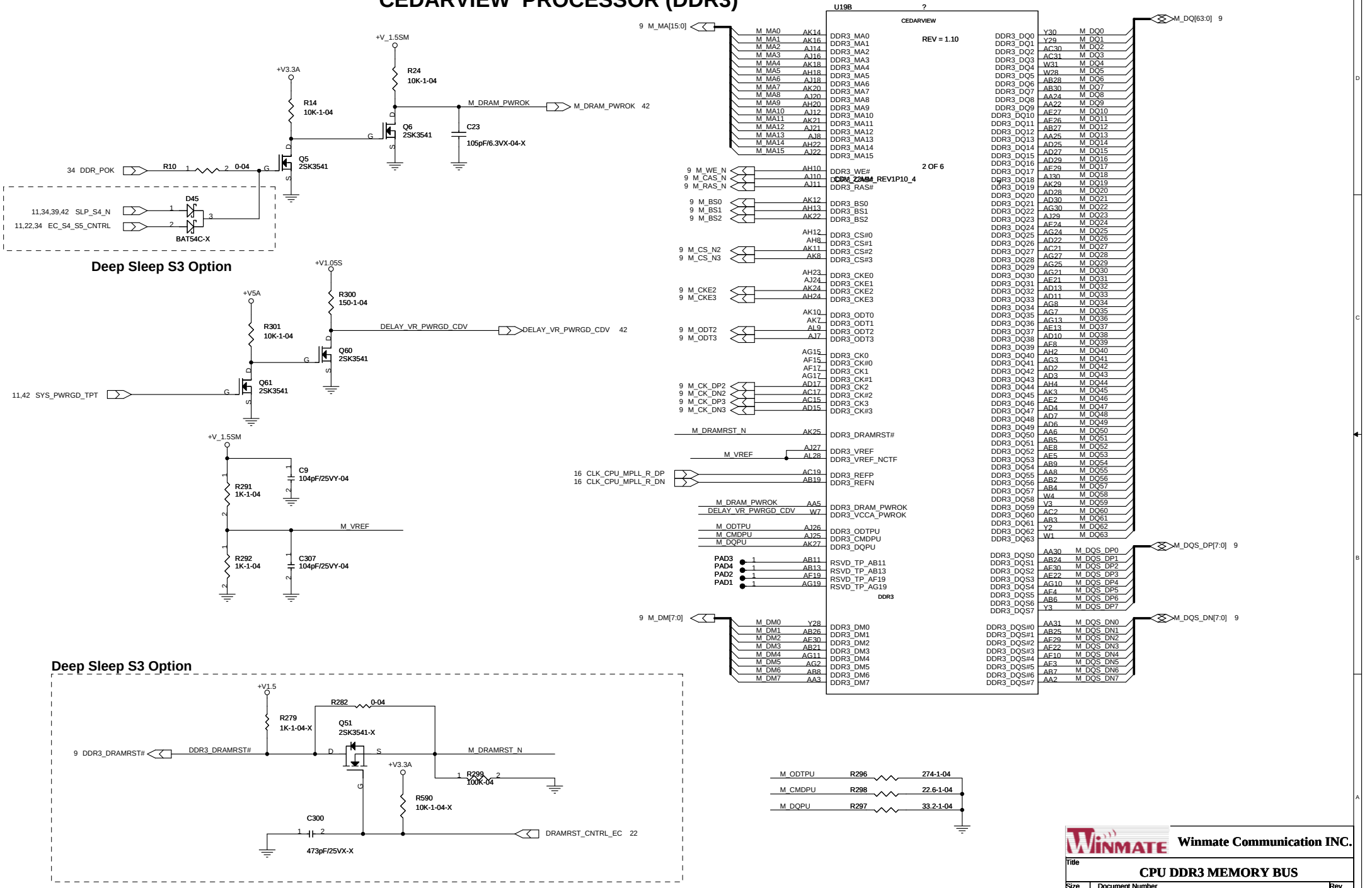

Winmate Communication INC.	
Title	CPU DDR3 MEMORY BUS
Size: Custom	Document Number: ID8HH
Rev	100
Date: Friday, January 25, 2013	Sheet 4 of 44

CEDARVIEW PROCESSOR (DDI/LVDS/CRT/IHDA)

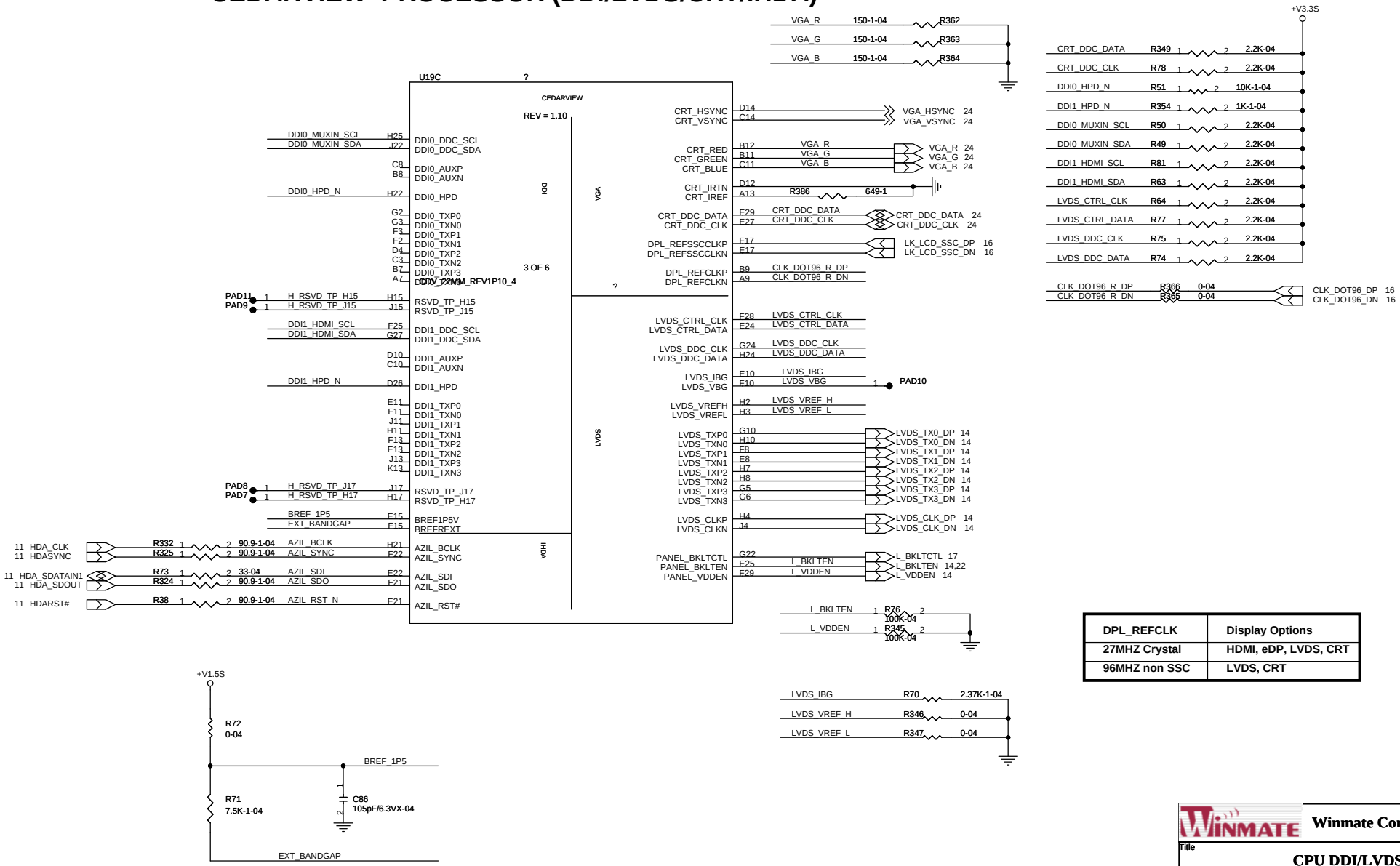

DPL_REFCLK	Display Options
27MHZ Crystal	HDMI, eDP, LVDS, CRT
96MHZ non SSC	LVDS, CRT

Winmate Communication INC.

Title: CPU DDI/LVDS/CRT/IHDA

Size: Custom | Document Number: ID8HH | Rev: 100

Date: Friday, January 25, 2013 | Sheet 5 of 44

CEDARVIEW PROCESSOR (CLK/MISC/RESERVED)

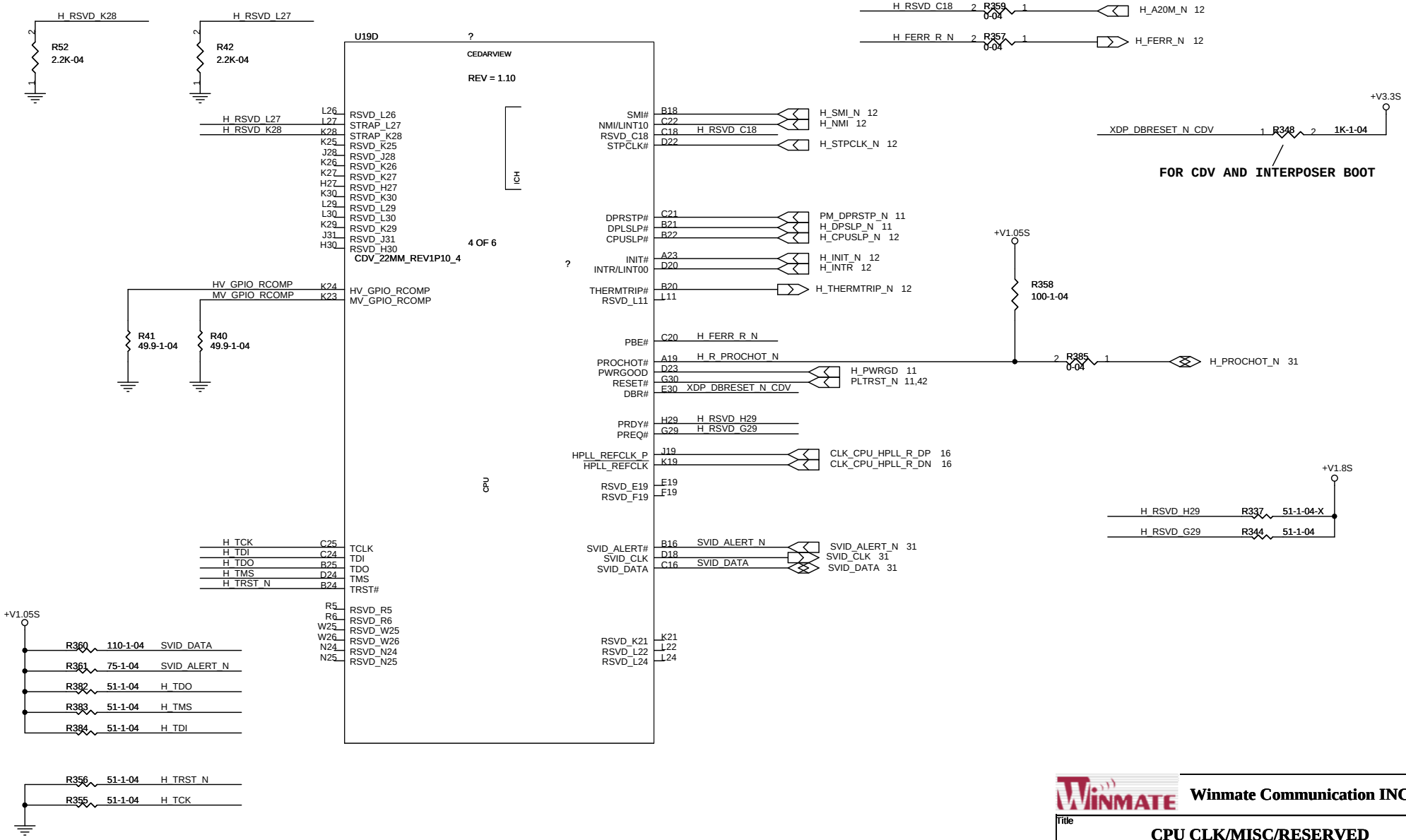

Winmate Communication INC.	
Title	CPU CLK/MISC/RESERVED
Size B	Document Number ID8HH
Rev	100
Date: Friday, January 25, 2013	Sheet 6 of 44

CEDARVIEW PROCESSOR (POWER)

+VCC_CORE:
N2600 (3.5Watt): 3.67Amp
N2800 (6.5Watt): 4.234Amp
D2700 (10Watt): 6.472Amp

+V1.05S: 1.268Amp

+V1.5: 0.759Amp

+V1.5S: 0.125Amp

+V3.3S_PRIME: 0.004Amp

+VCC_GFXCORE:
N2600 (3.5Watt): 3.861Amp
N2800 (6.5Watt): 3.571Amp
D2700 (10Watt): 3.713Amp

+V1.8S: 0.151Amp

U19E ? CEDARVIEW REV = 1.10 5 OF 6 CDV_22MM_REV1P10_4

DDR | CPU | POWER | DMI | PLL

AA14	VCCADDR_1
AA16	VCCADDR_2
W16	VCCADDR_3
W18	VCCADDR_4
N30	VCCRAMXXX_1
N31	VCCRAMXXX_2
V4	VCCRAMXXX_3
W8	VCCACKDDR_1
W9	VCCACKDDR_2
W11	VCCADLLDDR_1
W13	VCCADLLDDR_2
AJ6	VCCCKDDR_1
AK6	VCCCKDDR_2
AH14	V_SM_1
AH19	V_SM_2
AK23	V_SM_3
AK5	V_SM_4
AL11	V_SM_5
AL16	V_SM_6
AL21	V_SM_7
AG31	V_SM_8
B5	VCCADP_1
C6	VCCADP_2
D6	VCCADP_3
K17	VCCADP0_SFR
L18	VCCADP1_SFR
L19	VCCAGPIO_LV
L16	VCCAGPIO_REF
N18	VCCAGPIO_DIO
D30	VCCAGPIO_1
D31	VCCAGPIO_2
B13	VCCADAC
H5	VCCALVDS
J1	VCCDLVDS
L21	VCCDIO
B29	VCCAZILAON_1
A30	VCCAZILAON_2
AA18	VCCSFRMPL
AA11	VCCDMPL
B27	VCCPLLCPU0
C29	VCCPLLCPU1_1
B30	VCCPLLCPU1_2
B26	VCCAHPLL

P18	VCC_CPU_01
P19	VCC_CPU_02
P21	VCC_CPU_03
P28	VCC_CPU_04
P29	VCC_CPU_05
P30	VCC_CPU_06
R22	VCC_CPU_07
R23	VCC_CPU_08
R24	VCC_CPU_09
R25	VCC_CPU_10
R26	VCC_CPU_11
R27	VCC_CPU_12
T19	VCC_CPU_13
T21	VCC_CPU_14
T29	VCC_CPU_15
T30	VCC_CPU_16
T31	VCC_CPU_17
U22	VCC_CPU_18
U23	VCC_CPU_19
U24	VCC_CPU_20
U25	VCC_CPU_21
U26	VCC_CPU_22
U27	VCC_CPU_23
V18	VCC_CPU_24
V19	VCC_CPU_25
V21	VCC_CPU_26
V28	VCC_CPU_27
V29	VCC_CPU_28
V30	VCC_CPU_29

N11	VCC_GFX_01
N13	VCC_GFX_02
P11	VCC_GFX_03
P13	VCC_GFX_04
R10	VCC_GFX_05
R9	VCC_GFX_06
T11	VCC_GFX_07
T13	VCC_GFX_08
U10	VCC_GFX_09
V11	VCC_GFX_10
V13	VCC_GFX_11
R4	VCCADMI_1
C5	VCCADMI_2
A4	VCCADMI_3
K4	VCCADMI_PLLSFR
V16	VCCFHV_1
T16	VCCFHV_2
V14	VCCFHV_3
M28	VCC_CPUSENSE
M30	VSS_CPUSENSE
U8	VCC_GFXSENSE
U7	VSS_GFXSENSE
N16	VCCTHRM_1
K2	VCCTHRM_2

VCCSENSE 31
VSSSENSE 31
VSENG 31
RTNG 31

Winmate Communication INC.	
Title	CPU VCORE & VCCIO
Size: Custom	Document Number: ID8HH
Rev	100
Date: Friday, January 25, 2013	Sheet 7 of 44

CEDARVIEW PROCESSOR (GROUND)

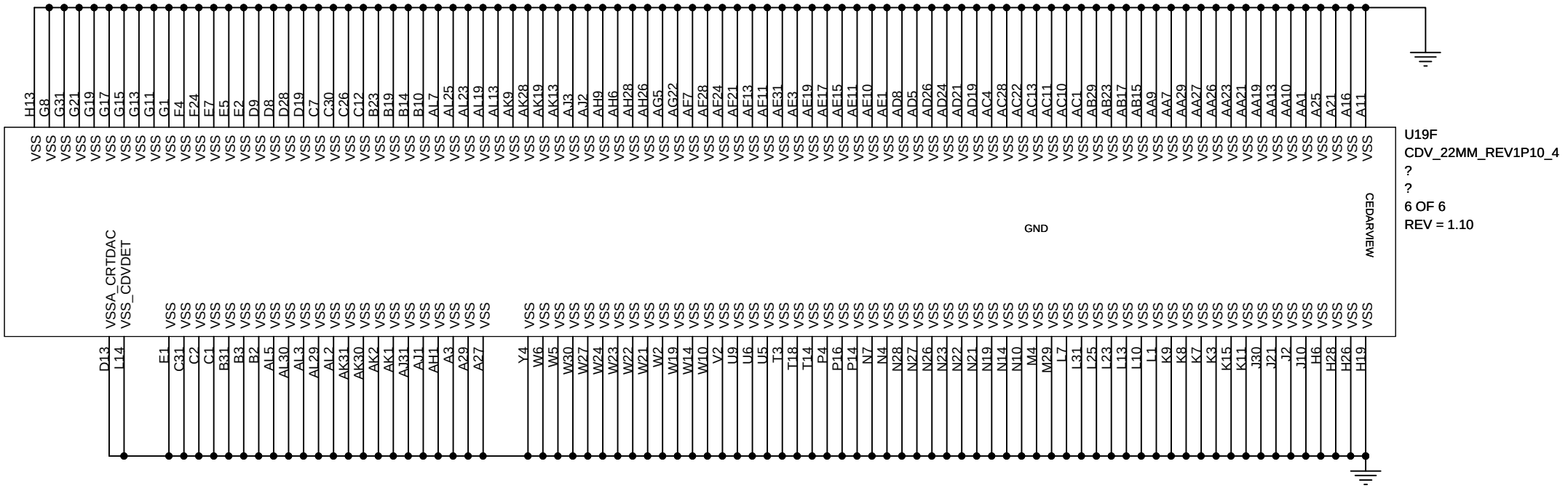

Winmate Communication INC.	
Title	CPU GROUND
Size: Custom	Document Number: ID8HH
Rev	100
Date: Friday, January 25, 2013	Sheet 8 of 44

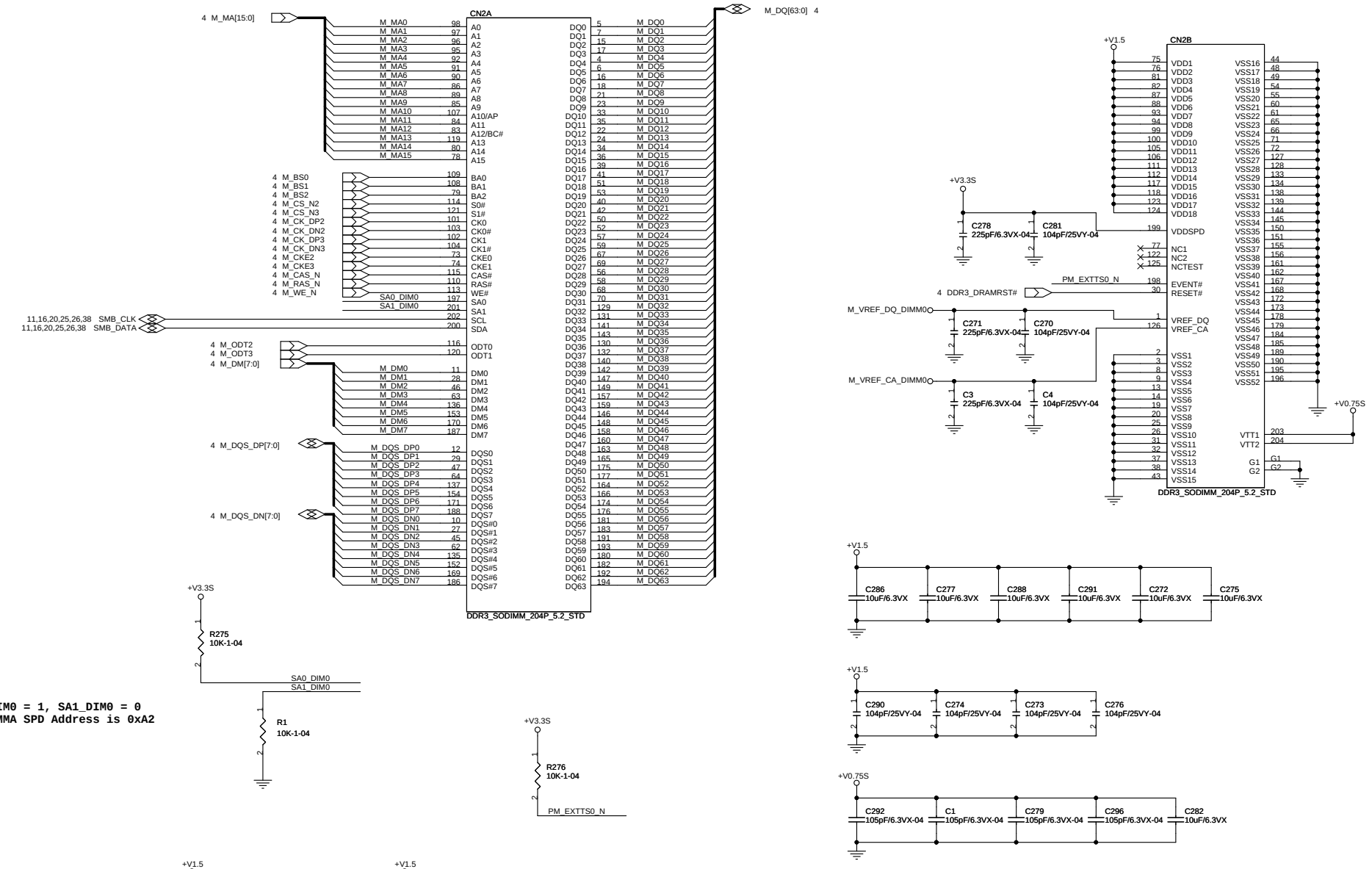

Winmate Communication INC.

Title: DDR3 SODIMM

Size	Document Number	Rev
A	ID8HH	100

Date: Friday, January 25, 2013 Sheet 9 of 44

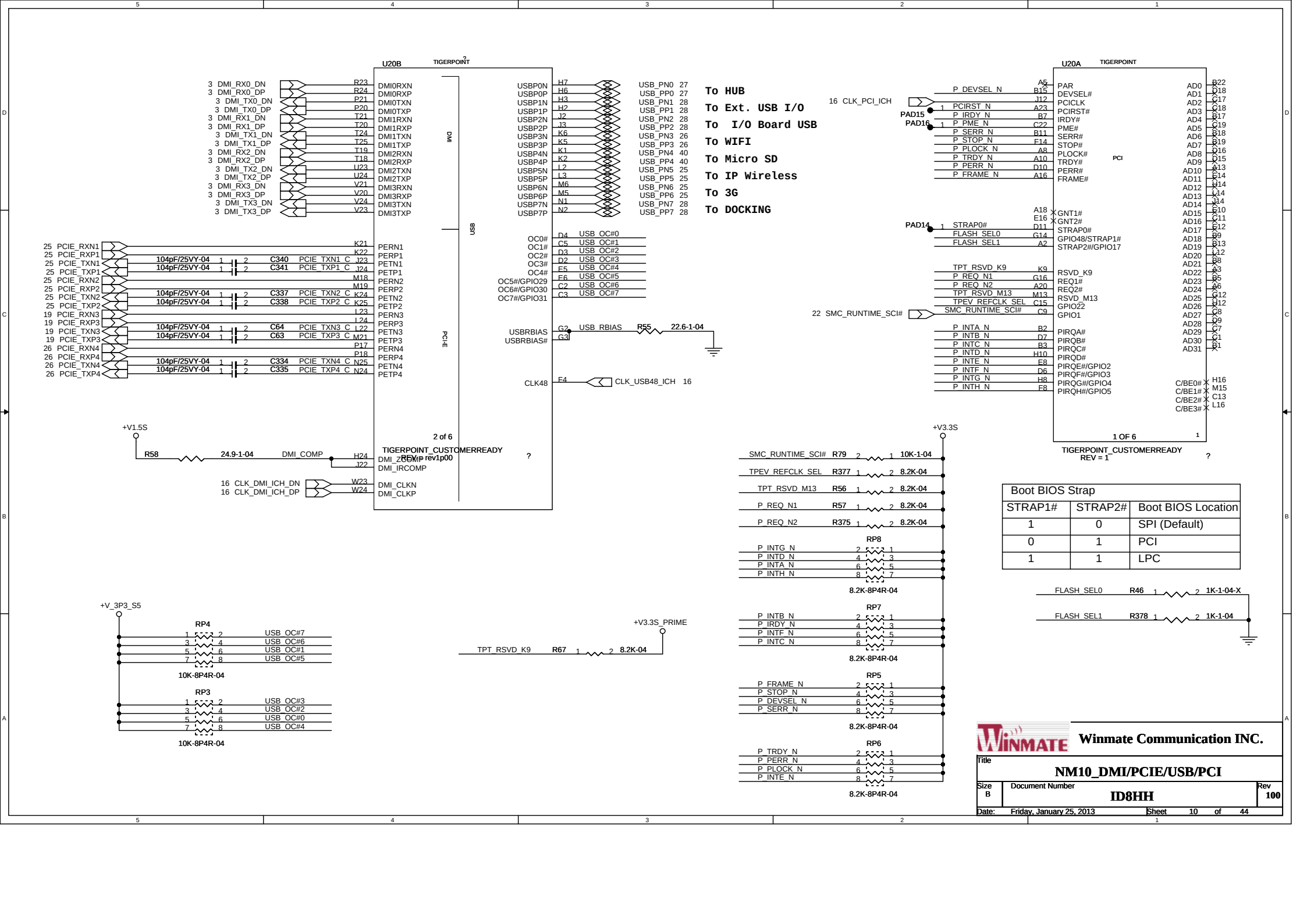
U20B
TIGERPOINT
DMI
USB
PCI-E
2 of 6
TIGERPOINT_CUSTOMERREADY
REV = rev1p00
U20A
TIGERPOINT
PCI
1 OF 6
TIGERPOINT_CUSTOMERREADY
REV = 1
To HUB
To Ext. USB I/O
To I/O Board USB
To WIFI
To Micro SD
To IP Wireless
To 3G
To DOCKING
Boot BIOS Strap
STRAP1# STRAP2# Boot BIOS Location
1 0 SPI (Default)
0 1 PCI
1 1 LPC
Winmate Communication INC.
NM10_DMI/PCIE/USB/PCI
ID8HH
Date: Friday, January 25, 2013
Sheet 10 of 44

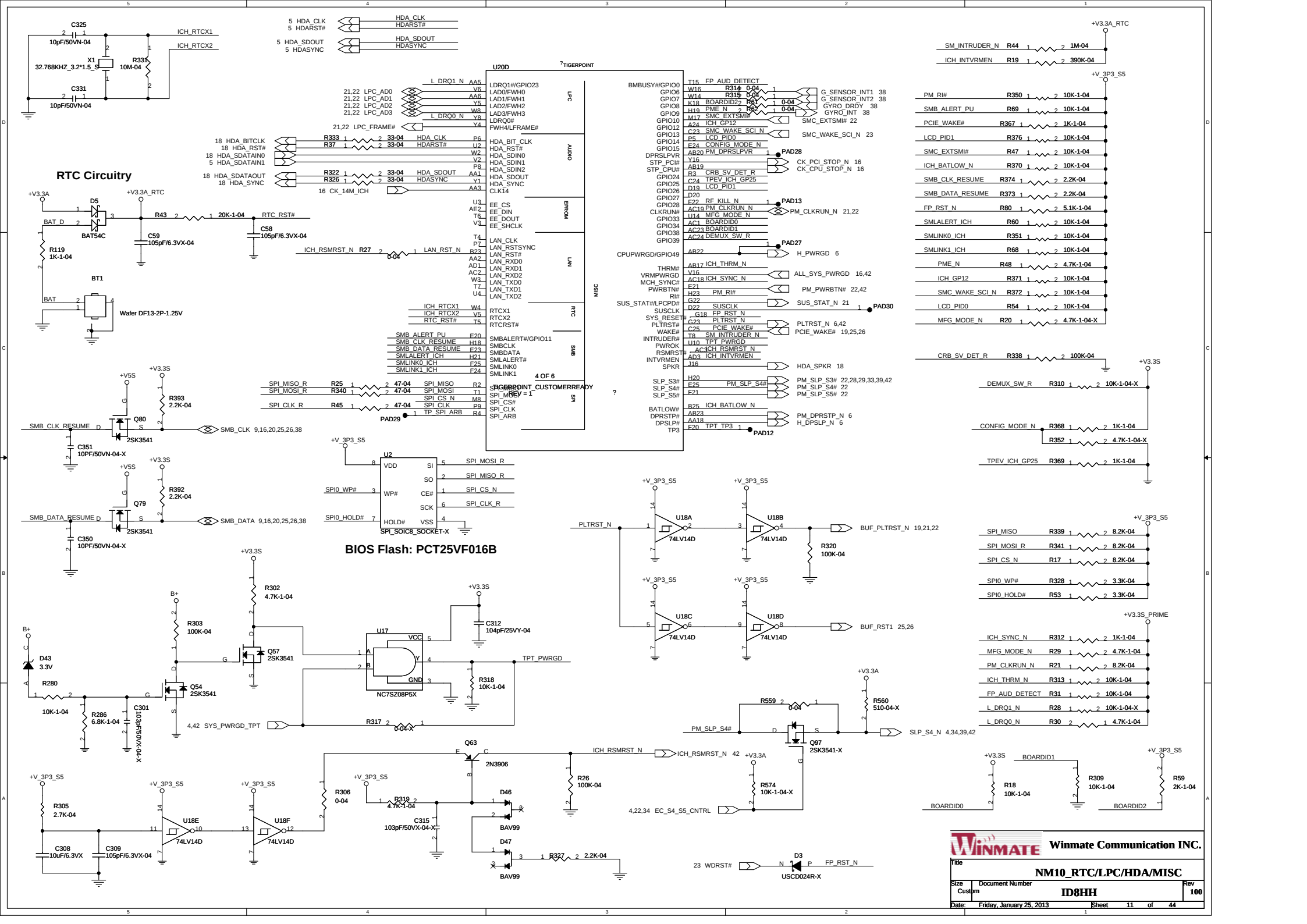
RTC Circuitry
BIOS Flash: PCT25VF016B
U20D
TIGERPOINT
MISC
4 OF 6
TIGERPOINT_CUSTOMERREADY
REV = 1
SPI_SOIC8_SOCKET-X
Winmate Communication INC.
NM10_RTC/LPC/HDA/MISC
ID8HH
Rev 100
Date: Friday, January 25, 2013
Sheet 11 of 44

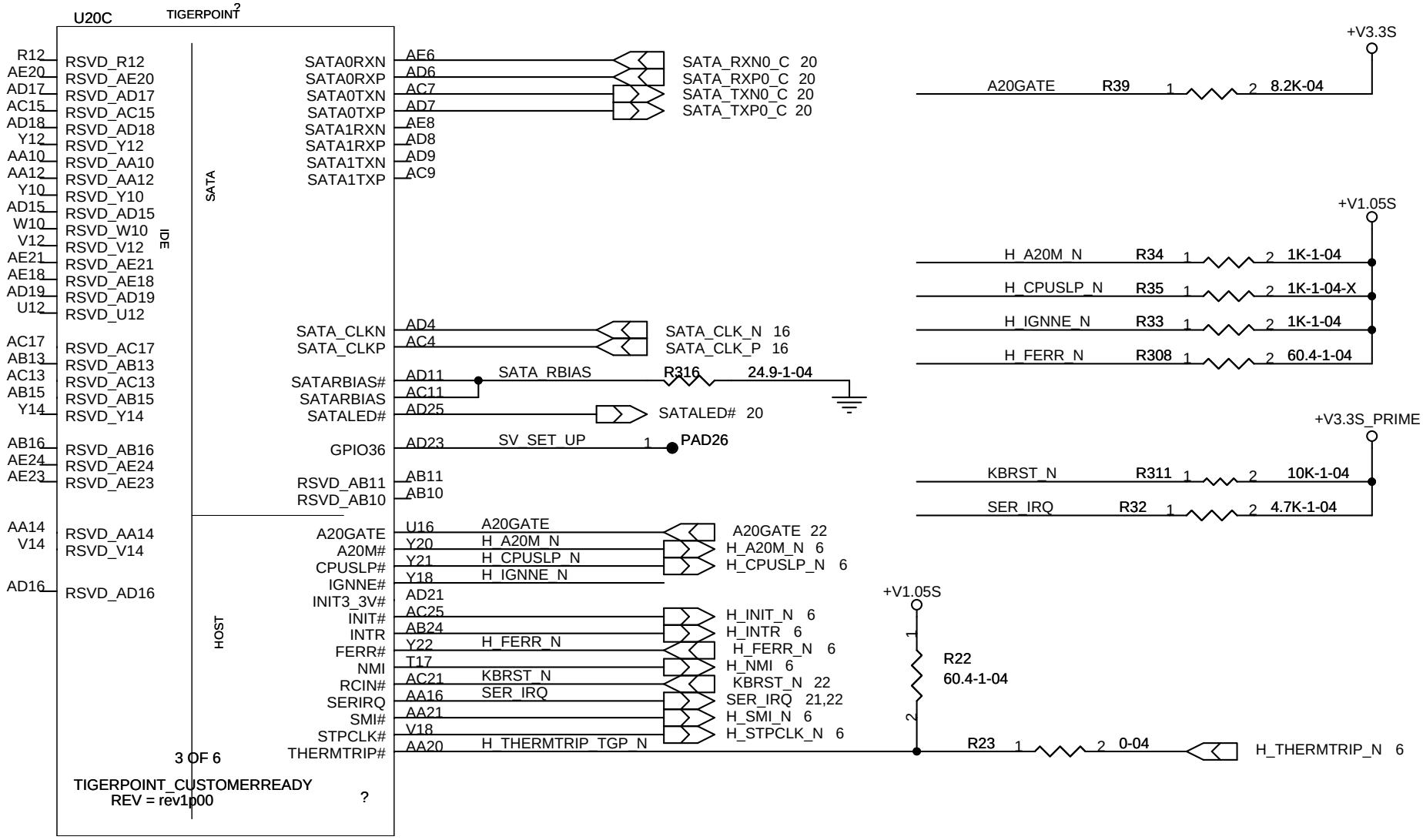

Winmate Communication INC.		
Title: NM10_HOST/SATA/RSVD		
Size: A	Document Number: ID8HH	Rev: 100
Date: Friday, January 25, 2013	Sheet 12 of 44	

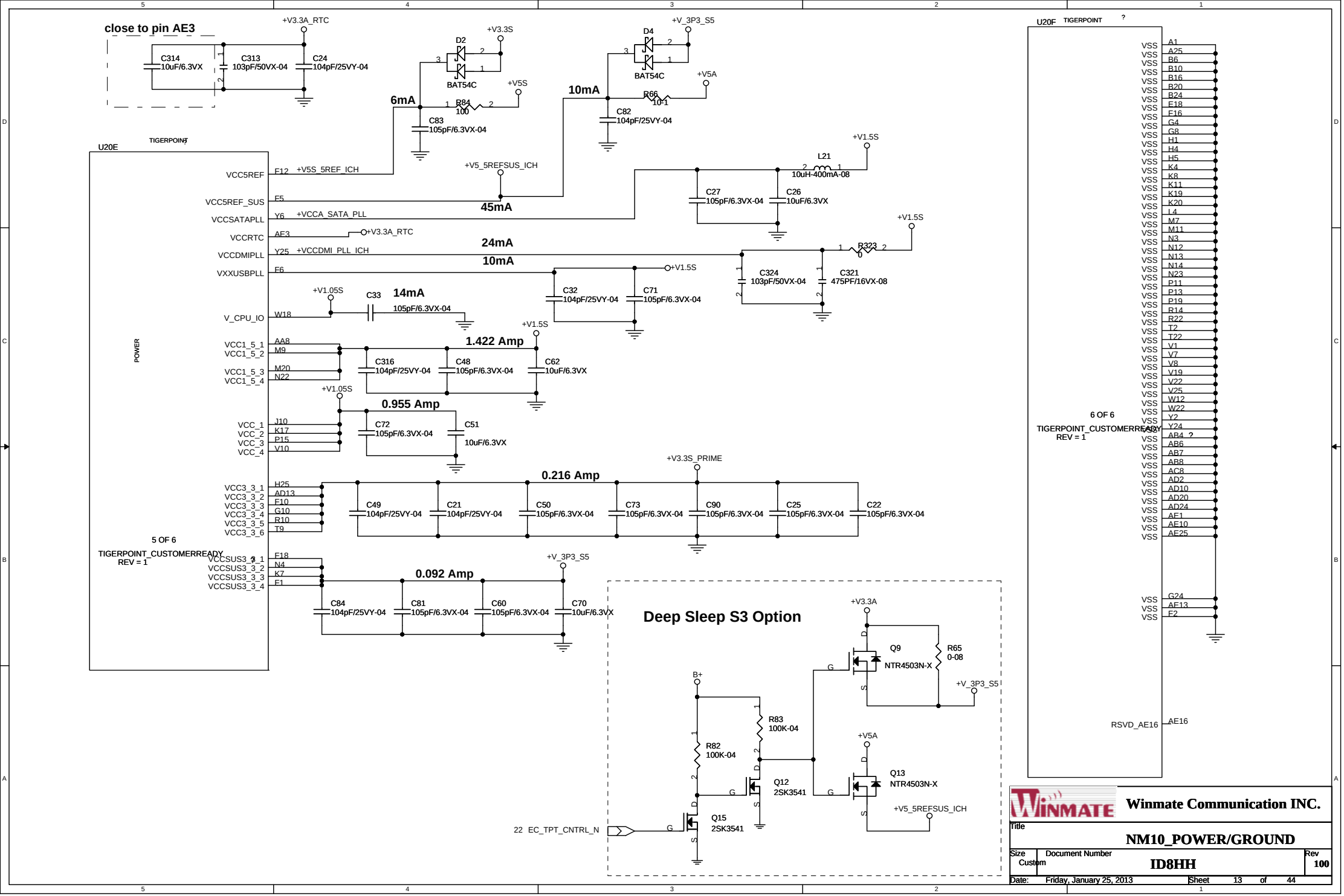
close to pin AE3
+V3.3A_RTC
C314 10uF/6.3VX
C313 103pF/50VX-04
C24 104pF/25VY-04
+V3.3S
D2
BAT54C
6mA
R84 100
+V5S
C83 105pF/6.3VX-04
+V_3P3_S5
D4
BAT54C
10mA
+V5A
R66 10-1
C82 104pF/25VY-04
U20E
TIGERPOINT
POWER
VCC5REF F12 +V5S_5REF_ICH
VCC5REF_SUS F5
VCCSATAPLL Y6 +VCCA_SATA_PLL
VCCRTC AE3 +V3.3A_RTC
VCCDMIPLL Y25 +VCCDMI_PLL_ICH
VXXUSBPLL F6
+V5_5REFSUS_ICH
45mA
+V1.5S
L21 10uH-400mA-08
C27 105pF/6.3VX-04
C26 10uF/6.3VX
24mA
10mA
R323 0
C324 103pF/50VX-04
C321 475PF/16VX-08
C32 104pF/25VY-04
C71 105pF/6.3VX-04
+V1.05S
C33 105pF/6.3VX-04
14mA
V_CPU_IO W18
VCC1_5_1 AA8
VCC1_5_2 M9
VCC1_5_3 M20
VCC1_5_4 N22
1.422 Amp
C316 104pF/25VY-04
C48 105pF/6.3VX-04
C62 10uF/6.3VX
0.955 Amp
VCC_1 J10
VCC_2 K17
VCC_3 P15
VCC_4 V10
C72 105pF/6.3VX-04
C51 10uF/6.3VX
+V3.3S_PRIME
0.216 Amp
VCC3_3_1 H25
VCC3_3_2 AD13
VCC3_3_3 F10
VCC3_3_4 G10
VCC3_3_5 R10
VCC3_3_6 T9
C49 104pF/25VY-04
C21 104pF/25VY-04
C50 105pF/6.3VX-04
C73 105pF/6.3VX-04
C90 105pF/6.3VX-04
C25 105pF/6.3VX-04
C22 105pF/6.3VX-04
5 OF 6
TIGERPOINT_CUSTOMERREADY
REV = 1
VCCSUS3_3_1 F18
VCCSUS3_3_2 N4
VCCSUS3_3_3 K7
VCCSUS3_3_4 F1
0.092 Amp
C84 104pF/25VY-04
C81 105pF/6.3VX-04
C60 105pF/6.3VX-04
C70 10uF/6.3VX
Deep Sleep S3 Option
+V3.3A
Q9 NTR4503N-X
R65 0-08
B+
R83 100K-04
R82 100K-04
Q12 2SK3541
Q13 NTR4503N-X
Q15 2SK3541
22 EC_TPT_CNTRL_N
U20F
TIGERPOINT
VSS A1
VSS A25
VSS B6
VSS B10
VSS B16
VSS B20
VSS B24
VSS E18
VSS F16
VSS G4
VSS G8
VSS H1
VSS H4
VSS H5
VSS K4
VSS K8
VSS K11
VSS K19
VSS K20
VSS L4
VSS M7
VSS M11
VSS N3
VSS N12
VSS N13
VSS N14
VSS N23
VSS P11
VSS P13
VSS P19
VSS R14
VSS R22
VSS T2
VSS T22
VSS V1
VSS V7
VSS V8
VSS V19
VSS V22
VSS V25
VSS W12
VSS W22
VSS Y2
VSS Y24
VSS AB4
VSS AB6
VSS AB7
VSS AB8
VSS AC8
VSS AD2
VSS AD10
VSS AD20
VSS AD24
VSS AE1
VSS AE10
VSS AE25
6 OF 6
TIGERPOINT_CUSTOMERREADY
REV = 1
VSS G24
VSS AF13
VSS F2
RSVD_AE16 AE16
Winmate Communication INC.
Title
NM10_POWER/GROUND
Size Custom
Document Number ID8HH
Rev 100
Date: Friday, January 25, 2013
Sheet 13 of 44

SELB	
H	6 Bits
L	8 Bits

LR	
H	Left to right scan
L	Right to left scan

UD	
H	Bottom to top scan
L	Top to bottom scan

CABCEN0	CABCEN1	
L	L	CABC OFF
L	H	still picture
H	L	user interface image
H	H	moving image

LCDRST# > 50ms

VDD: 3.3V/60mA
AVDD: 11V/30mA
VGH: 20V/1mA
VGL: -6.8V/1mA
VCOM: 3.8V

Winmate Communication INC.

Title	LVDS	
Size	Document Number ID8HH	Rev 100
Date: Friday, January 25, 2013	Sheet 14 of 44	

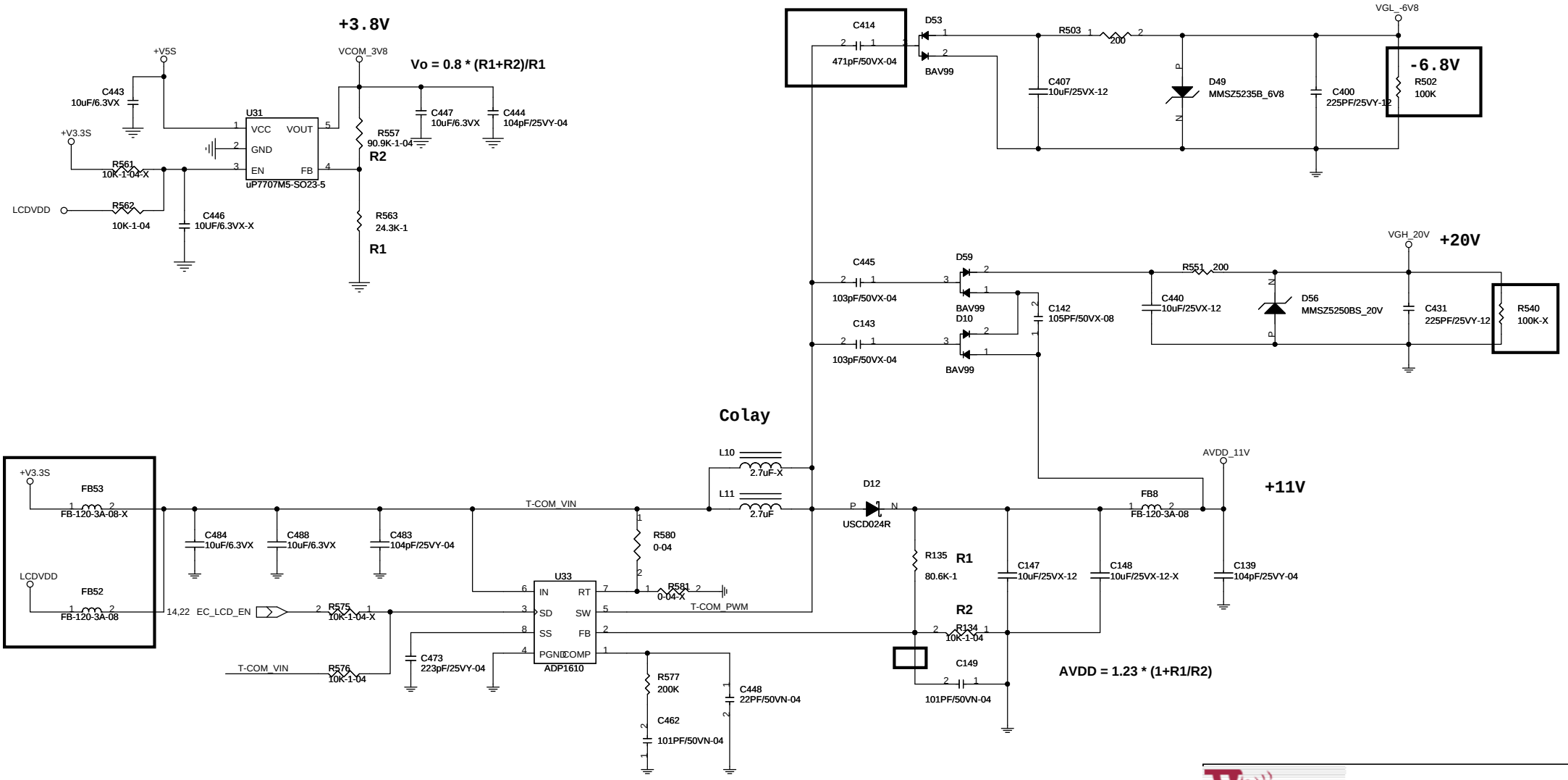

Winmate Communication INC.		
Title: T-COM VR ADP1610		
Size: Custom	Document Number: ID8HH	Rev: 100
Date: Friday, January 25, 2013	Sheet 15 of 44	

Place each 0.1uF cap as close as possible to each VDD_IO pin.
Place the 10uF cap on the VDD_IO plane.

Standby Power for Wake On LAN
25MHz being free-running

+V1.5S FB7 FB-600-200mA VDD1P5 40mA
C120 104pF/25VY-04 C122 104pF/25VY-04 C119 10uF/6.3VX

+V1.05S FB6 FB-600-200mA VDD1P05 46mA
C108 475PF/16VX-08 C121 104pF/25VY-04 C125 104pF/25VY-04

+V3.3S FB45 FB-600-200mA 38mA VDDPCI_3.3
C424 10uF/6.3VX
R118 1
C130 104pF/25VY-04

VDD1P5
AVDD3P3
C124 104pF/25VY-04 C131 104pF/25VY-04 C129 104pF/25VY-04 C134 104pF/25VY-04
VDD1P05

U25

25	AVDD_CORE_1.5-1	CPU0_LRS	54	CLK_CPU0	R495 0-04	CLK_CPU_HPLL_R_DP 6
48	AVDD_CORE_1.5-2	CPU0#_LRS	53	CLK_CPU#0	R494 0-04	CLK_CPU_HPLL_R_DN 6
7	VDDPCI_3.3	CPU1_LRS	51	CLK_CPU1	R471 0-04	CLK_CPU_MPLL_R_DP 4
20	VDD27	CPU1#_LRS	50	CLK_CPU#1	R470 0-04	CLK_CPU_MPLL_R_DN 4
3	VDD25_3.3	ITP/SRC1_LRS	47	CLK_SRC1	R469 0-04	CLK_PCIE_LAN 19
14	VDD14_3.3	ITP#/SRC1#_LRS	46	CLK_SRC1#	R442 0-04	CLK_PCIE_LAN# 19
15	VDD48_3.3	SRC2_LRS	42	CLK_SRC2	R410 0-04	CLK_MINIPCIE 25
34	VDDSRC_LVIO	SRC2#_LRS	41	CLK_SRC#2	R411 0-04	CLK_MINIPCIE# 25
49	VDDCPU_LVIO	SRC3_LRS	37	CLK_SRC3	R414 0-04	CLK_DMI_ICH_DP 10
2	X1	SRC3#_LRS	36	CLK_SRC#3	R415 0-04	CLK_DMI_ICH_DN 10
1	X2	SRC4_LRS	33	CLK_SRC4	R416 0-04	CLK_DMI_CPU_DP 3
6	SCLK	SRC4#_LRS	32	CLK_SRC#4	R417 0-04	CLK_DMI_CPU_DN 3
5	SDATA	SRC6_LRS	39	CLK_SRC6	R412 0-04	CLK_PCIE_3G 25
35	PCI_STOP#	SRC6#_LRS	38	CLK_SRC#6	R413 0-04	CLK_PCIE_3G# 25
45	CPU_STOP#	SRC7_LRS	44	CLK_SRC7	R441 0-04	CLK_PCIE_WIFI 26
55	CLKPWRGD/PD#	SRC#7_LRS	43	CLK_SRC#7	R432 0-04	CLK_PCIE_WIFI# 26
19	CKRQB#	SATA_LRS	31	CLK_SATA	R418 0-04	SATA_CLK_P 12
11	GNDPCI	SATA#_LRS	30	CLK_SATA#	R419 0-04	SATA_CLK_N 12
12	GND14M	LCD100_LRS	26	CLK_LCD100	R444 0-04	LK_LCD_SSC_DP 5
18	GND48	LCD100#_LRS	27	CLK_LCD100#	R443 0-04	LK_LCD_SSC_DN 5
22	GND27	DOT96/SRC5_LRS	23			CLK_DOT96_DP 5
28	GNDLCD	DOT96#/SRC5#_LR	24			CLK_DOT96_DN 5
29	GNDSATA	FSLC/14M_2X	13	CLK_REF14	R535 33-04	CK_14M_ICH 11
40	GNDSRC	ITP_EN/PCIF1	8	PCIF1	R507 33-04	CLK_PCI_ICH 10
52	GNDCPU	FSLB/PCI2_2X	9	CLK_PCI2	R533 33-04	CLK_LPC_EC 22
56	GND25	CKRQA#/PCI3_2X	10	CLK_PCI3	R534 22-04	CLK_LPC_Port80 22
57	EPAD1	SEPCI/27M/PCI4	21	CLK_PCI4	R473 33-04	PCLK_FINTEKB 21
		25M	4			
		D96_SL/USB48M	16	D96_SL	R514 33-04	CLK_USB48_ICH 10
		CKRQC#/48	17	CLKREQC#	R498 33-04	FINTEK_CLK48A 21

IDT9VRS4339B

100MHz 100MHz 100MHz 100MHz 100MHz 100MHz 100MHz 100MHz 96MHz 14.318MHz 33MHz

VDDPCI_3.3
R104 10K-1-04 STP_PCI#_R
R114 10K-1-04 PM_STPCPU#

9,11,20,25,26,38 SMB_CLK R531 0-04
9,11,20,25,26,38 SMB_DATA R506 0-04
11 CK_PCI_STOP_N R103 0-04 STP_PCI#_R
11 CK_CPU_STOP_N R115 0-04-X PM_STPCPU#
11,42 ALL_SYS_PWRGD R504 0-04 CLK_PG
R496 10K-1-04 CLKREQ_B_N

XTAL_OUT
XTAL_IN_R R505 0-04 XTAL_IN
X2 25MHZ_3.2*2.5_S
C406 22PF/50VN-04
C405 22PF/50VN-04

USE RESISTOR 470ohm TO REDUCE XTAL DRIVE POWER TO 50 uW IF NECESSARY. OTHER WISE USE 0 OHM RESISTOR.

R497 10K-1-04
CLK_PCI3 R510 22-04 CLK_TPM 21

FSC CLK_REF14	FSB CLK_PCI2	BCLK Select
0	0	133MHz
0	1	166MHz
1	**0**	**100MHz (DEFAULT)**
1	1	200MHz

ITP_EN	Output
0	SRC1
1	CPU_ITP

DOT96_SL	Output
1	DOT96
0	SRC5

VDDPCI_3.3
R513 10K-1-04 D96_SL

PCIF1 R508 10K-1-04

VDDPCI_3.3
R472 10K-1-04 CLK_PCI4

VDDPCI_3.3
R509 10K-1-04-X CLK_PCI2
R532 10K-1-04

VDDPCI_3.3
R511 10K-1-04 CLK_REF14
R512 10K-1-04-X

SEL_PCI	Output
1	33MHZ
0	27MHZ

Winmate Communication INC.

Title: Clock Gen IDT9VRS4339B

Size	Document Number	Rev
Custom	ID8HH	100
Date: Friday, January 25, 2013	Sheet 16 of 44	

For VIN < 8 V Application

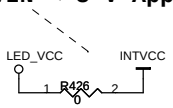

Current Programming

Vcrtl < 1V
ILED=(Vctrl - 0.1V) / (Rs*10)

Vcrtl > 1.2V
ILED=0.1V/Rs
180mA=0.1/0.56

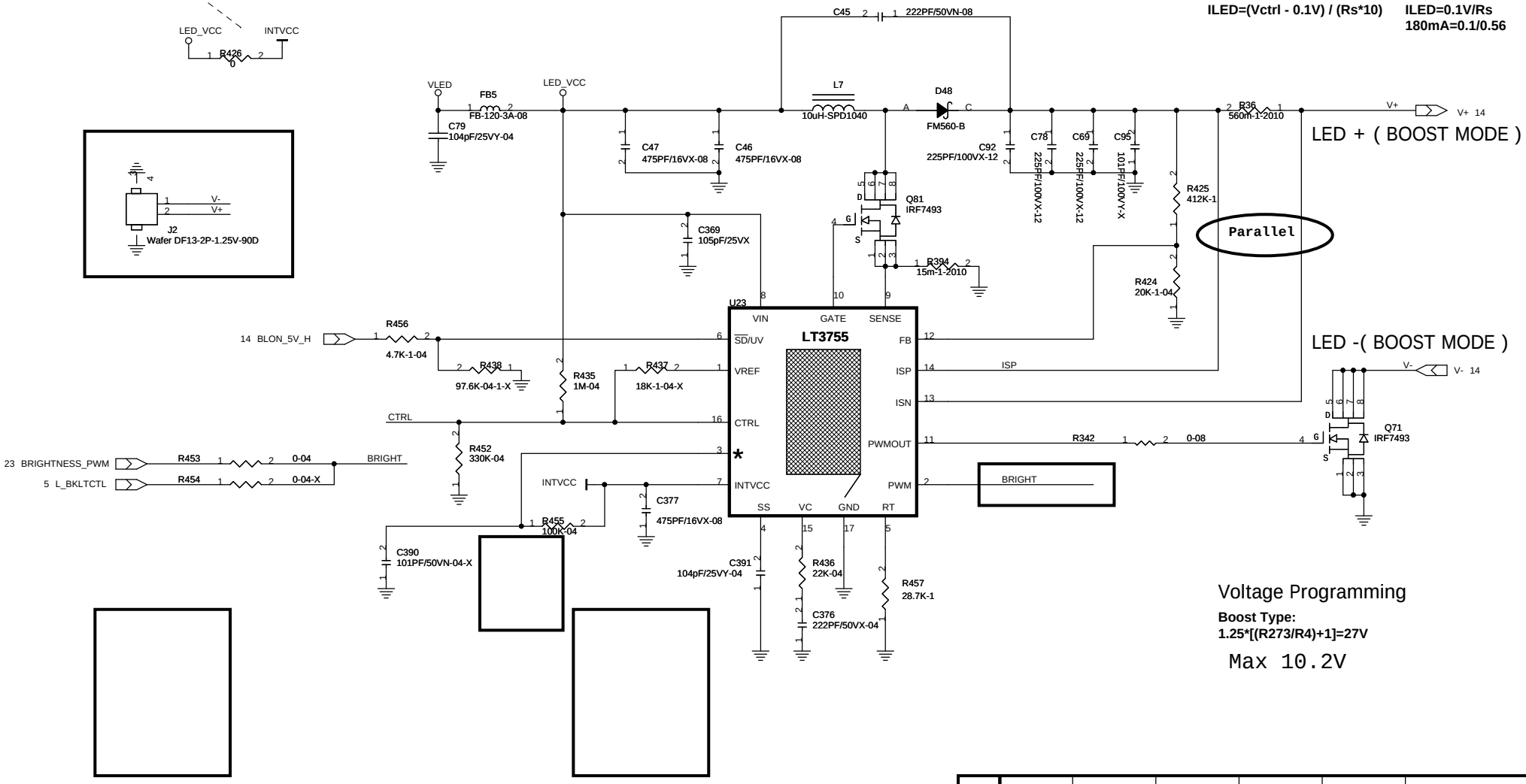

Voltage Programming

Boost Type:
1.25*[(R273/R4)+1]=27V

Max 10.2V

*	ASSY	U1(IC)	R15	R20	C23	E11 (Name)	U2-3 (Name)
	-A	LT3755EUD	100k	OPT	OPT	$\overline{\text{OPENLED}}$	$\overline{\text{OPENLED}}$
	-B	LT3755EUD-1	OPT	10k	100pF	SYNC	SYNC

Winmate Communication INC.

Title	LED Controller LT3755	
Size: Custom	Document Number: ID8HH	Rev: 100
Date: Friday, January 25, 2013	Sheet 17 of 44	

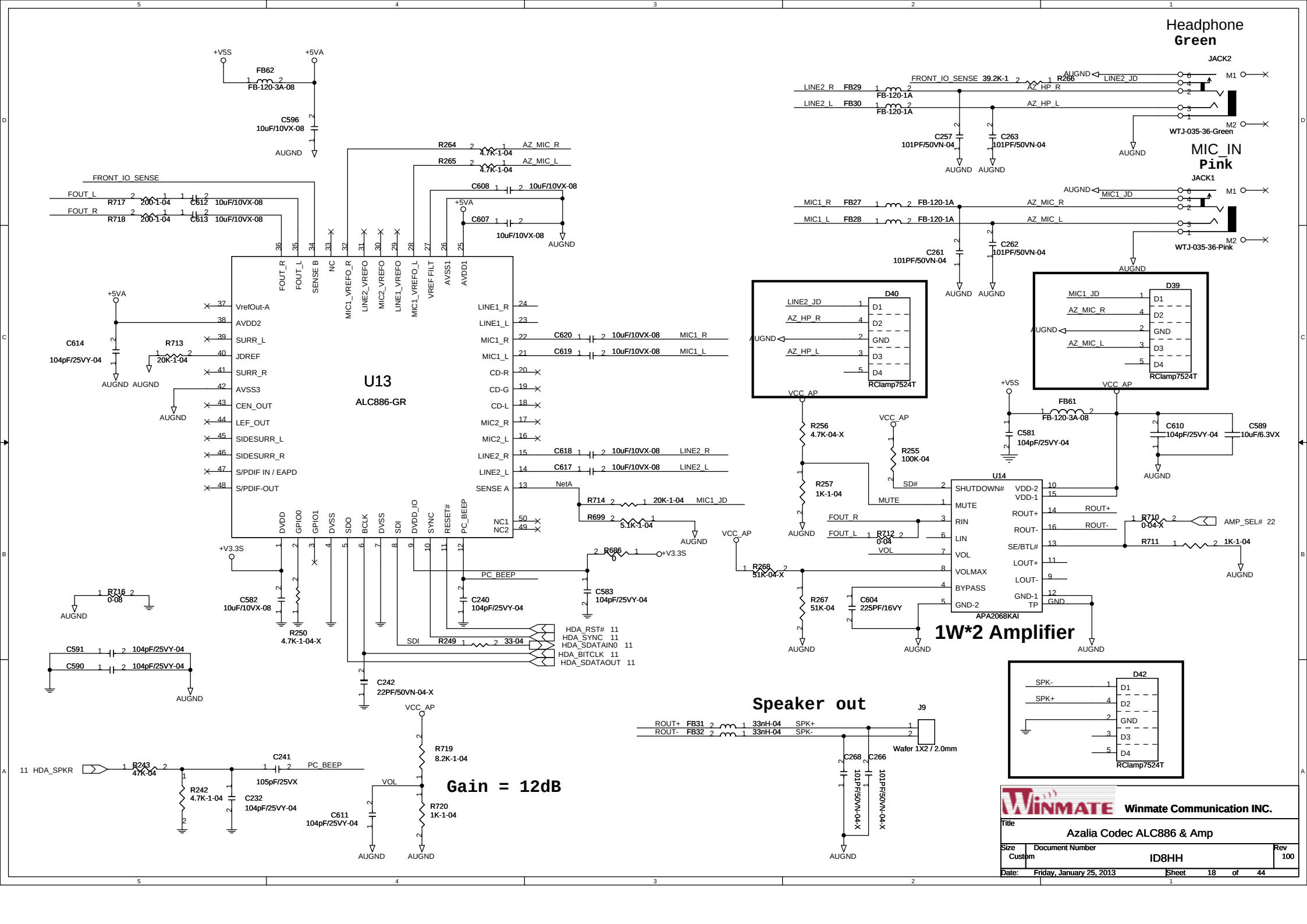
Headphone
Green
JACK2
WTJ-035-36-Green
MIC_IN
Pink
JACK1
WTJ-035-36-Pink
U13
ALC886-GR
D40
D39
D42
RClamp7524T
U14
APA2068KAI
1W*2 Amplifier
Speaker out
J9
Wafer 1X2 / 2.0mm
Gain = 12dB
Winmate Communication INC.
Azalia Codec ALC886 & Amp
ID8HH
Friday, January 25, 2013
Sheet 18 of 44

BCM57780 All Power
3.3V 222mA 804mW

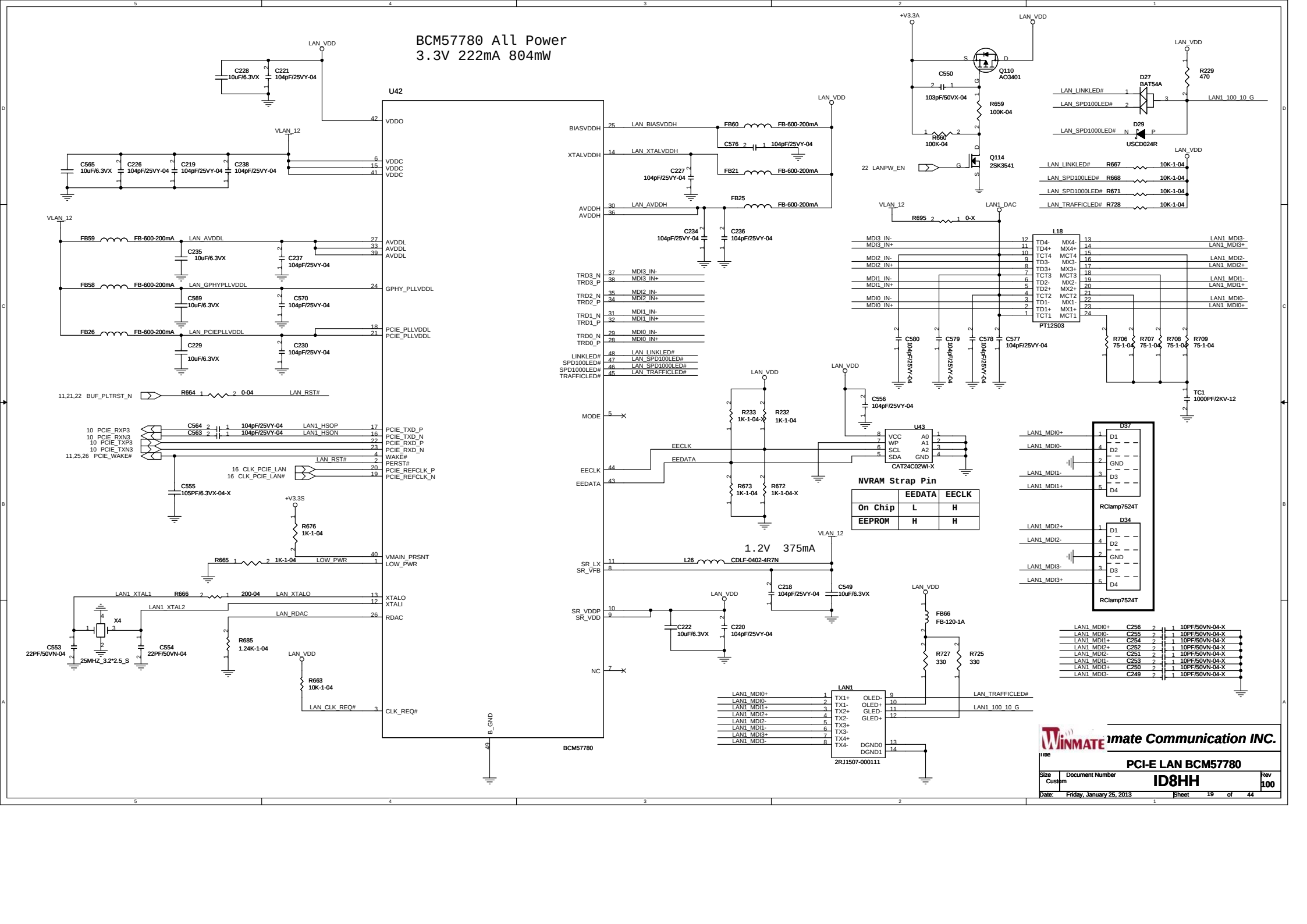

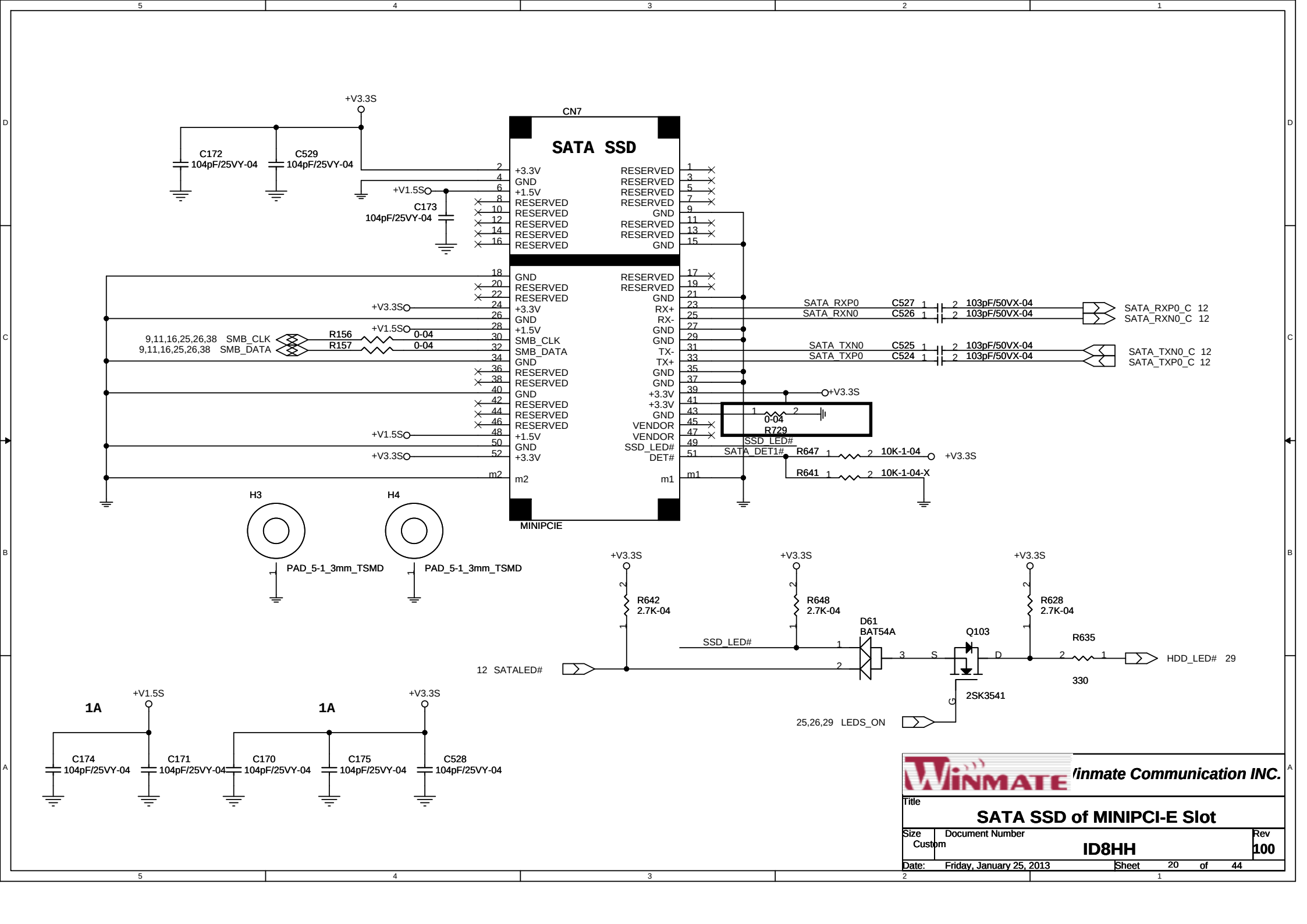

Winmate Communication INC.

Title: SATA SSD of MINIPCI-E Slot

Size: Custom | Document Number: ID8HH | Rev: 100

Date: Friday, January 25, 2013 | Sheet 20 of 44

COM2

RJ602(1-2 , 4.7K) on : UART 1 addr:0x3f8 irq3;
RJ601(1-2) on and RJ602(2-3 , 1K) off: UART 1 addr:0x3e0 IRQ3; RJ601off and RJ602 off:UART 1 disabled.

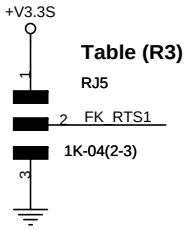

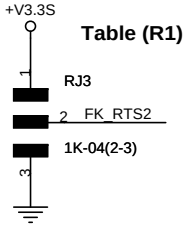

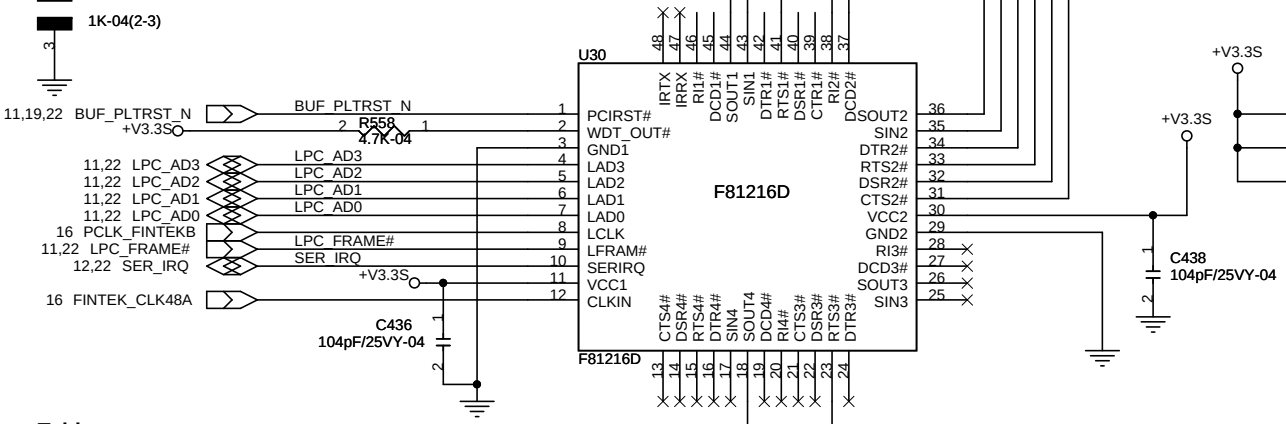

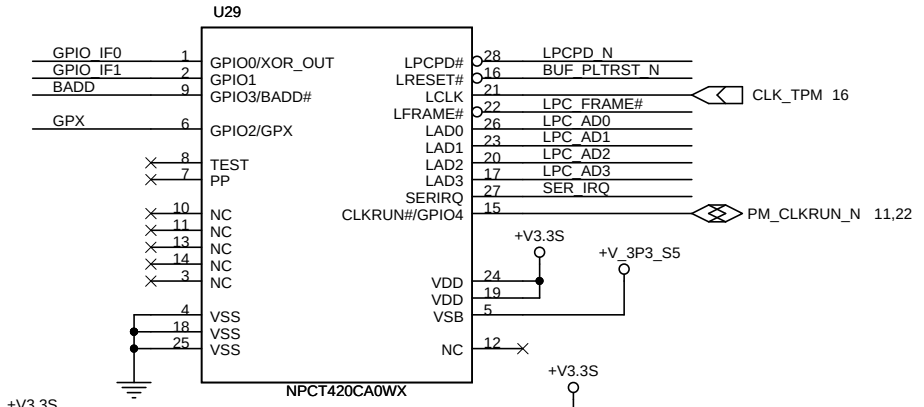

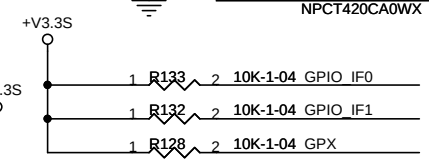

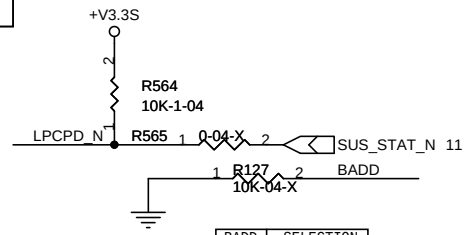

BADD	SELECTION
0	EEh - EFh
1	7Eh - 7Fh

'1' - pin is left open.
'0' - pin is pulled down.

COM2

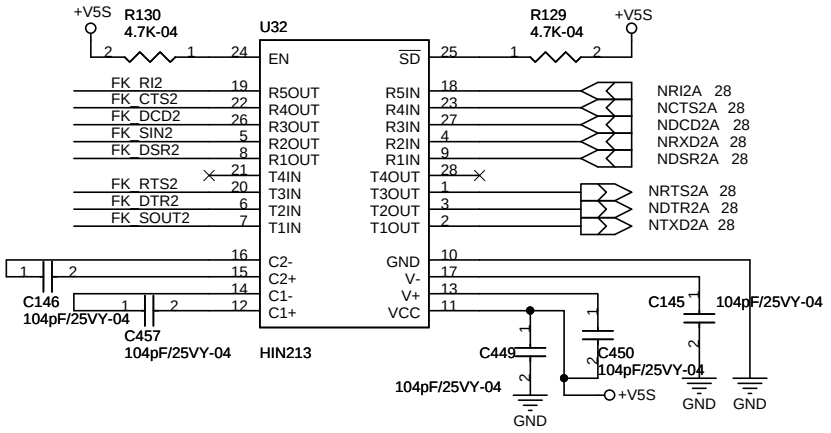

Table

Table (R1) RJ6	Table (R2) RJ7	Table (R3) RJ3	Address	Entry Key
0	**0**	**0**	**0x4e/0x4f**	**0x77**
0	0	1-2	0x2e/0x2f	0x77
0	1-2	0	0x4e/0x4f	0xa0
0	1-2	1-2	0x2e/0x2f	0xa0
1-2	0	0	0x4e/0x4f	0x87
1-2	0	1-2	0x2e/0x2f	0x87
1-2	1-2	0	0x4e/0x4f	0x67
1-2	1-2	1-2	0x2e/0x2f	0x67

Default

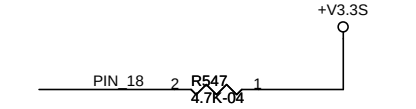

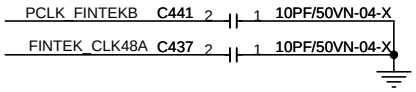

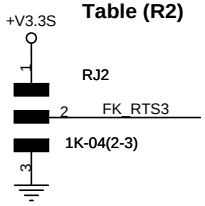

Winmate Communication INC.

Title: LPC to COM F81216D & TPM		
Size: Custom	Document Number: ID8HH	Rev: 100
Date: Friday, January 25, 2013	Sheet 21 of 44	

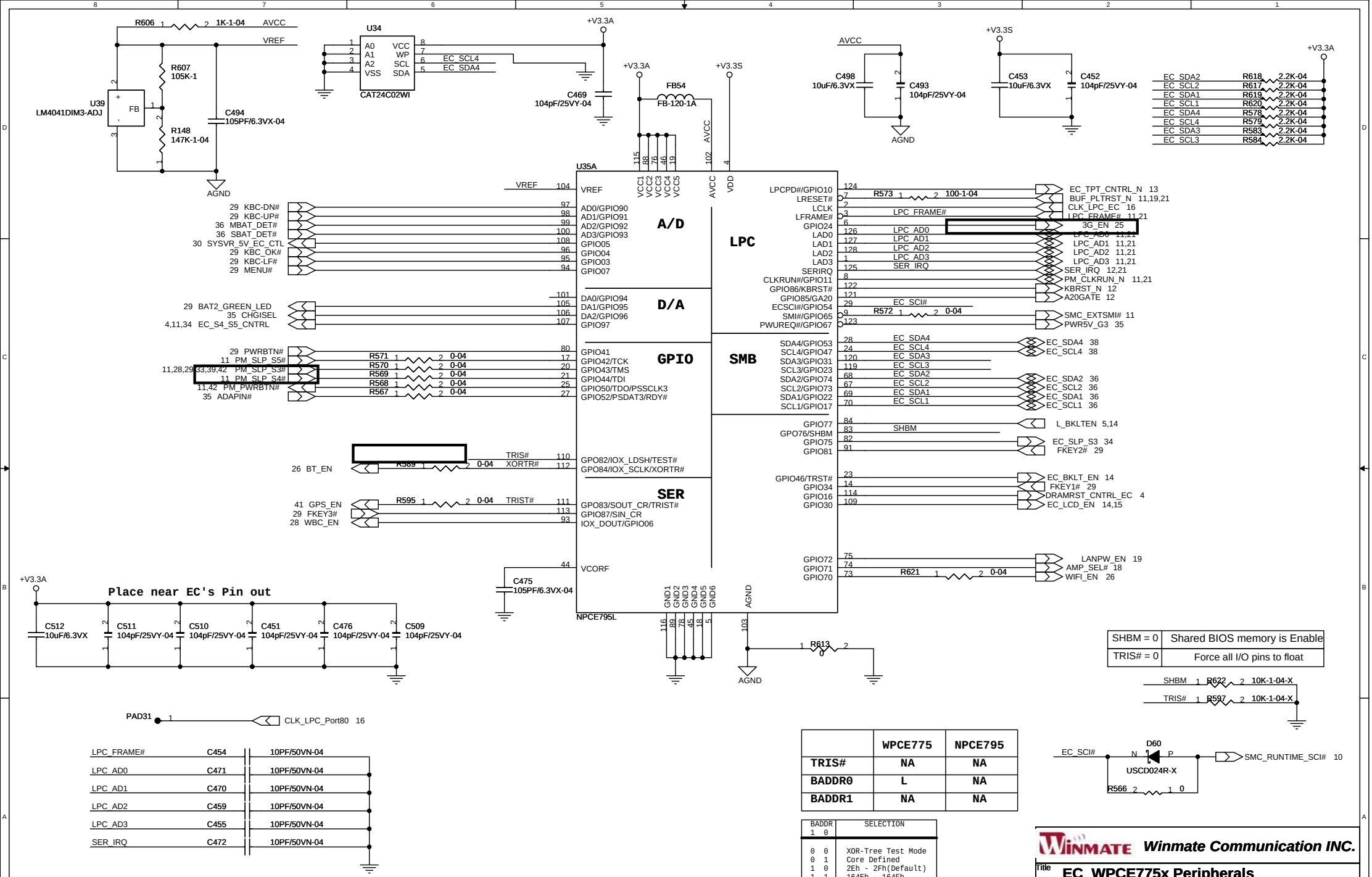

SHBM = 0	Shared BIOS memory is Enable
TRIS# = 0	Force all I/O pins to float

	WPCE775	NPCE795
TRIS#	NA	NA
BADDR0	L	NA
BADDR1	NA	NA

BADDR 1	BADDR 0	SELECTION
0	0	XOR-Tree Test Mode
0	1	Core Defined
1	0	2Eh - 2Fh(Default)
1	1	164Eh - 164Fh

'1' - pin is left open.
'0' - pin is pulled down.

Winmate Communication INC.

Title: EC_WPCE775x Peripherals

Size: Custom | Document Number: ID8HH | Rev: 100

Date: Friday, January 25, 2013 | Sheet 22 of 44

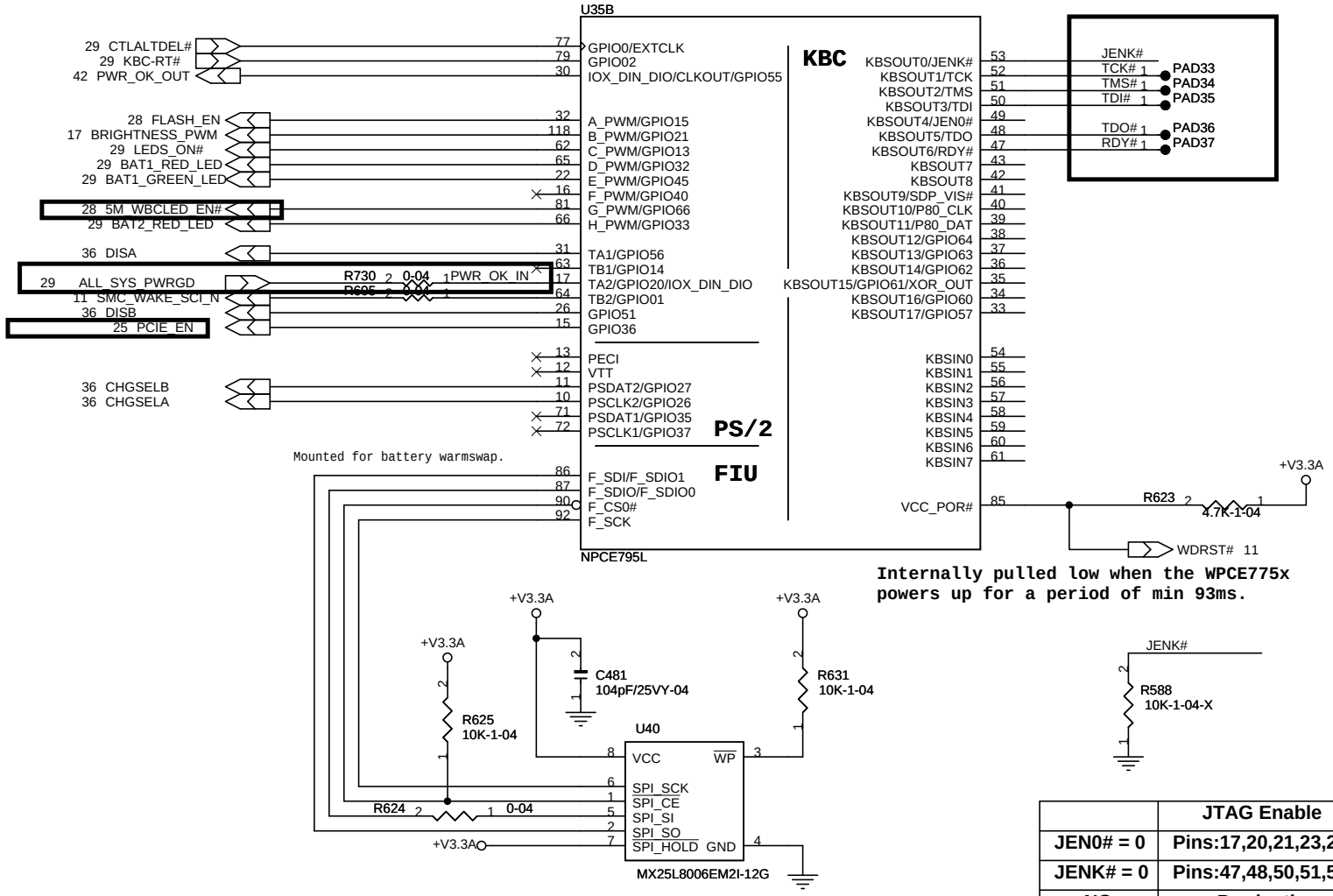

	JTAG Enable
JEN0# = 0	Pins:17,20,21,23,25,27
JENK# = 0	Pins:47,48,50,51,52
NC	Production

Winmate Communication INC.

Title: EC_WPCE775x KBC & PS/2 & FIU		
Size: Custom	Document Number: ID8HH	Rev: 100
Date: Friday, January 25, 2013	Sheet 23 of 44	

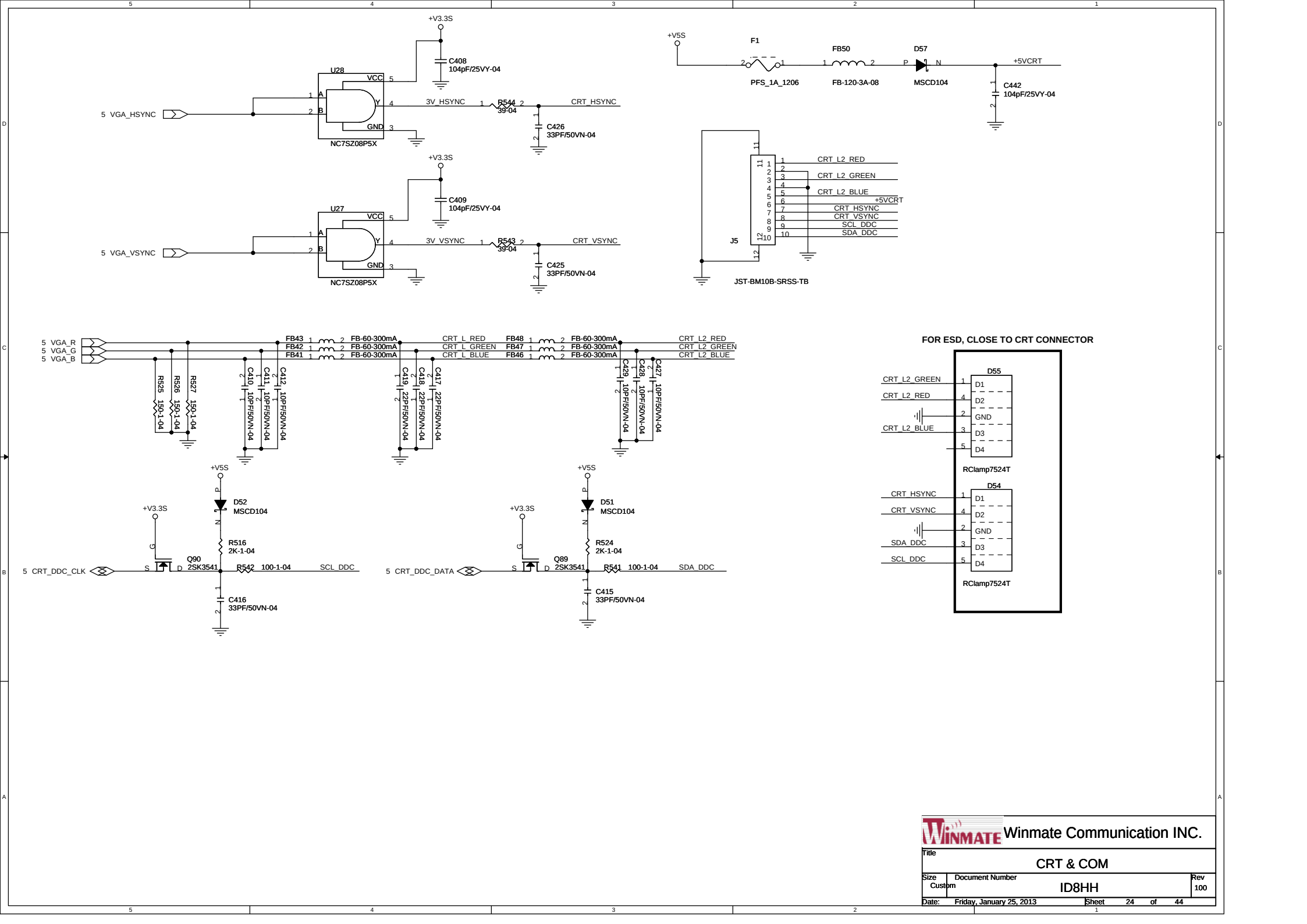

Winmate Communication INC.

Title	CRT & COM	
Size: Custom	Document Number: ID8HH	Rev: 100
Date: Friday, January 25, 2013	Sheet 24 of 44	

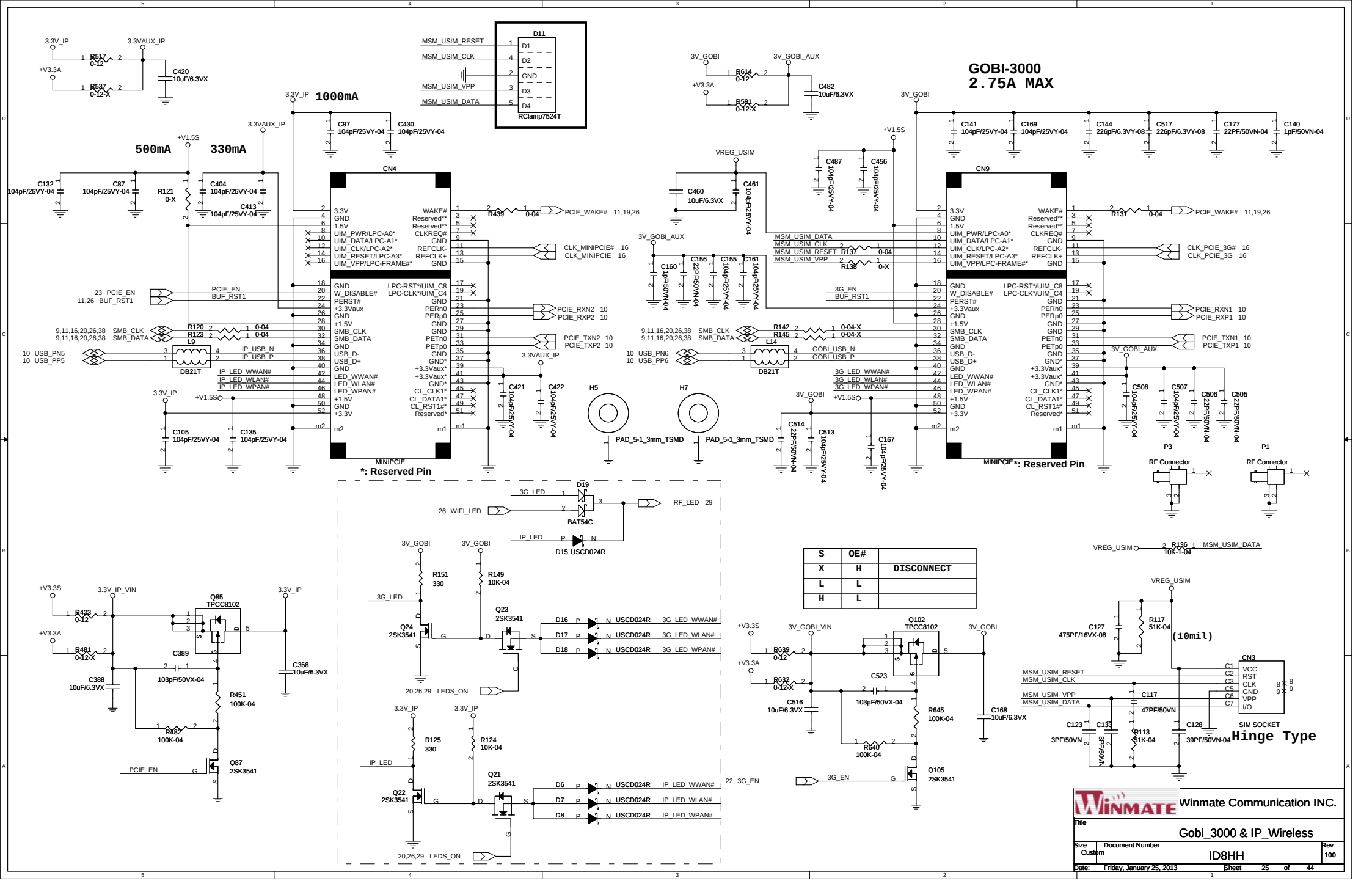

S	OE#	
X	H	DISCONNECT
L	L	
H	L	

Winmate Communication INC.

Title	Gobi_3000 & IP_Wireless	
Size: Custom	Document Number: ID8HH	Rev: 100
Date: Friday, January 25, 2013	Sheet 25 of 44	

Half Mini PCI-E, USB Interface

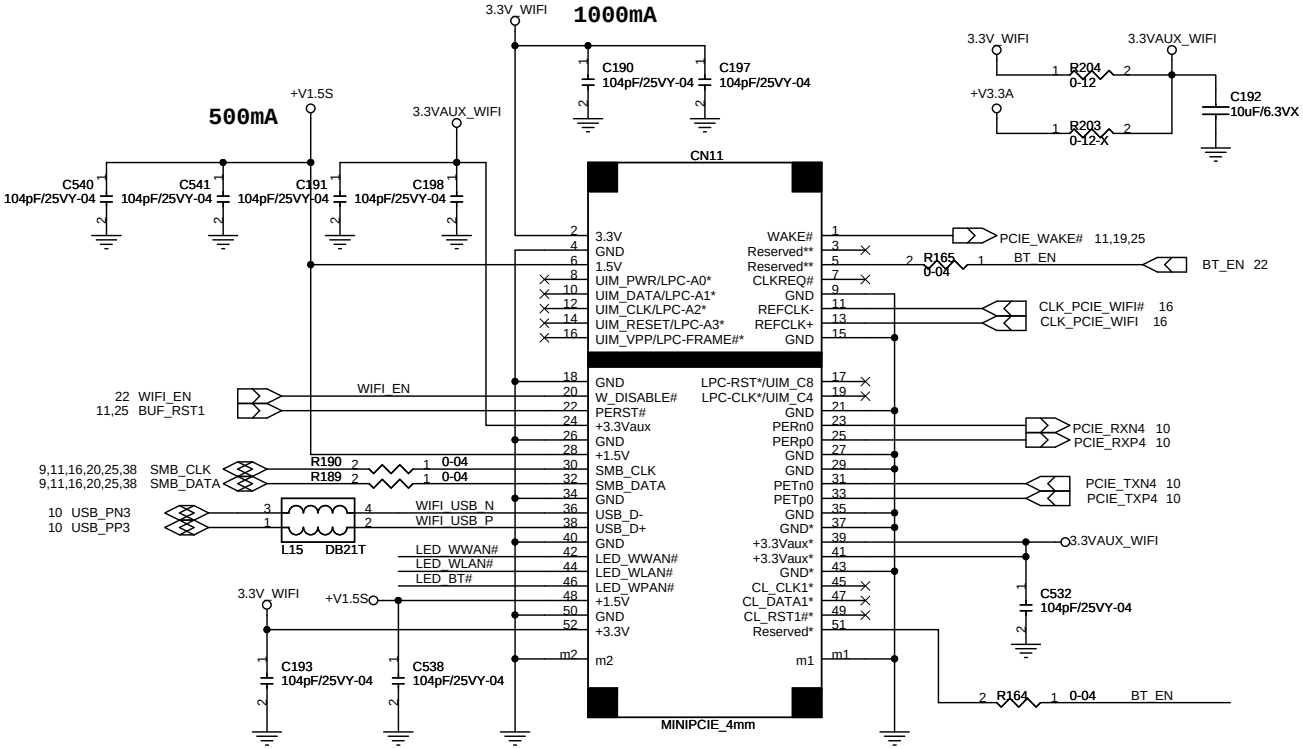

***: Reserved Pin**

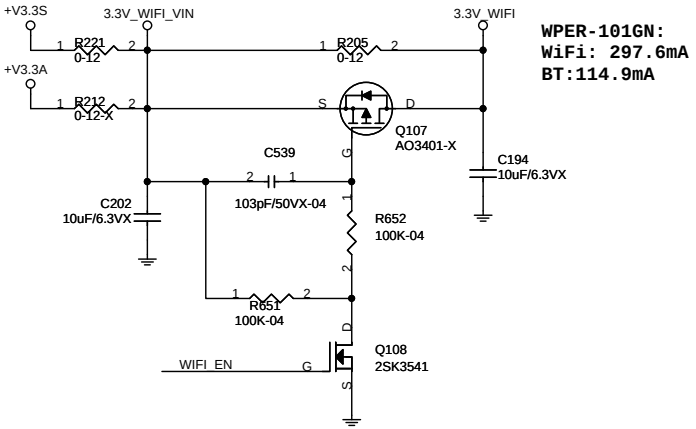

WPER-101GN:
WiFi: 297.6mA
BT:114.9mA

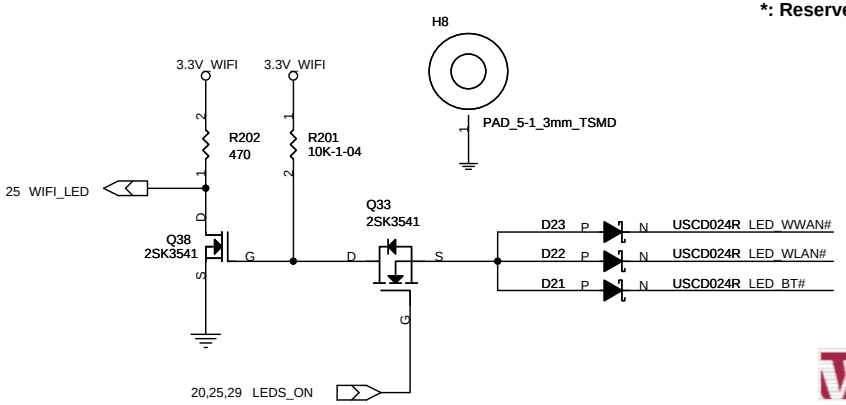

Half MiniPCI-e Module BOM Selection		
	WiFi only	WiFi+BT
Q5	0	NA
R739	NA	0
R740	NA	0

Winmate Communication INC.

Title	Mini PCIE WIFI & Blue Tooth	
Size B	Document Number ID8HH	Rev 100
Date: Friday, January 25, 2013	Sheet 26 of 44	

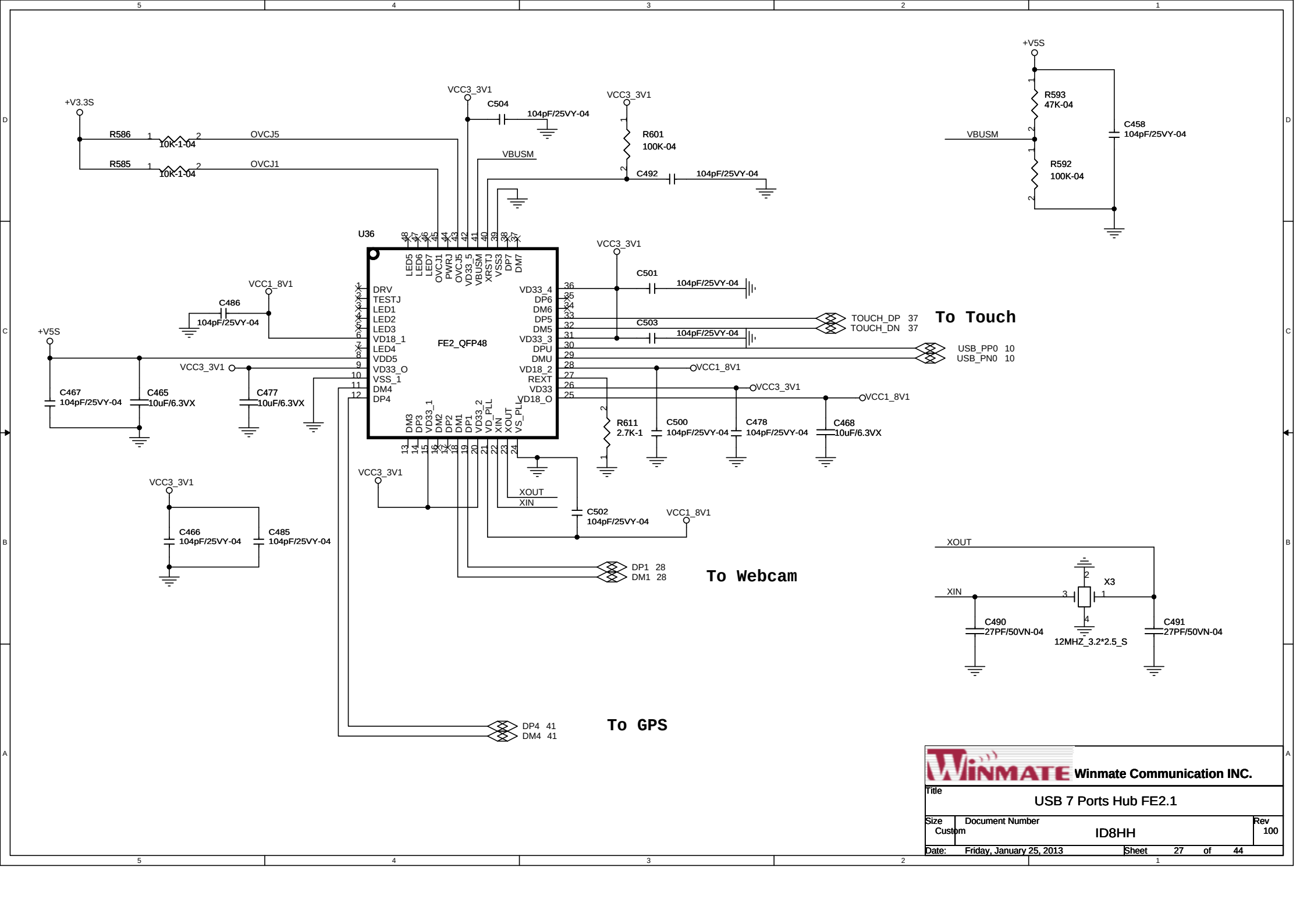

Winmate Communication INC.		
Title: USB 7 Ports Hub FE2.1		
Size: Custom	Document Number: ID8HH	Rev: 100
Date: Friday, January 25, 2013	Sheet 27 of 44	

USB for Web CAM

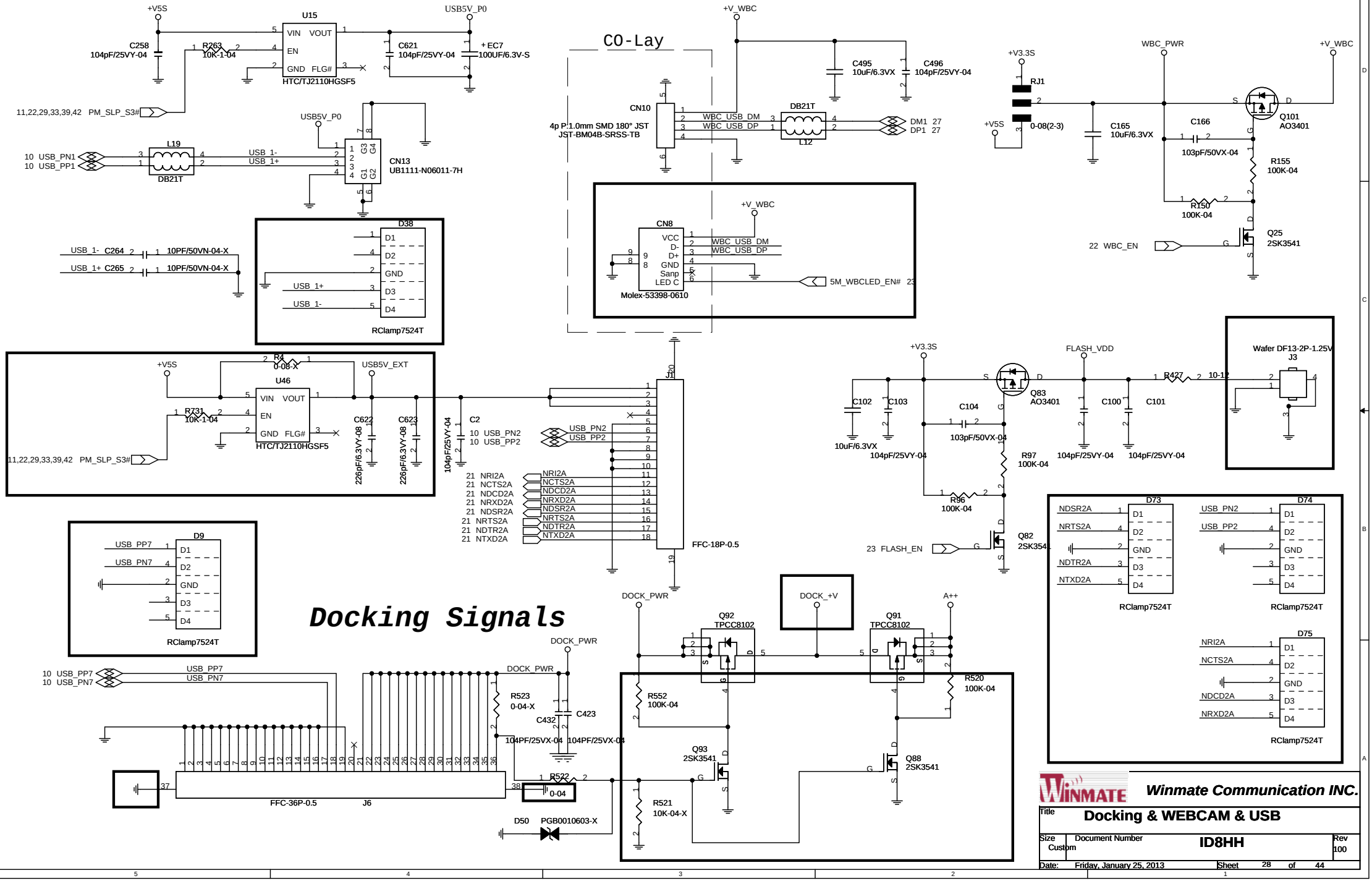

Front Panel Function Keys & LEDs

Change footprint

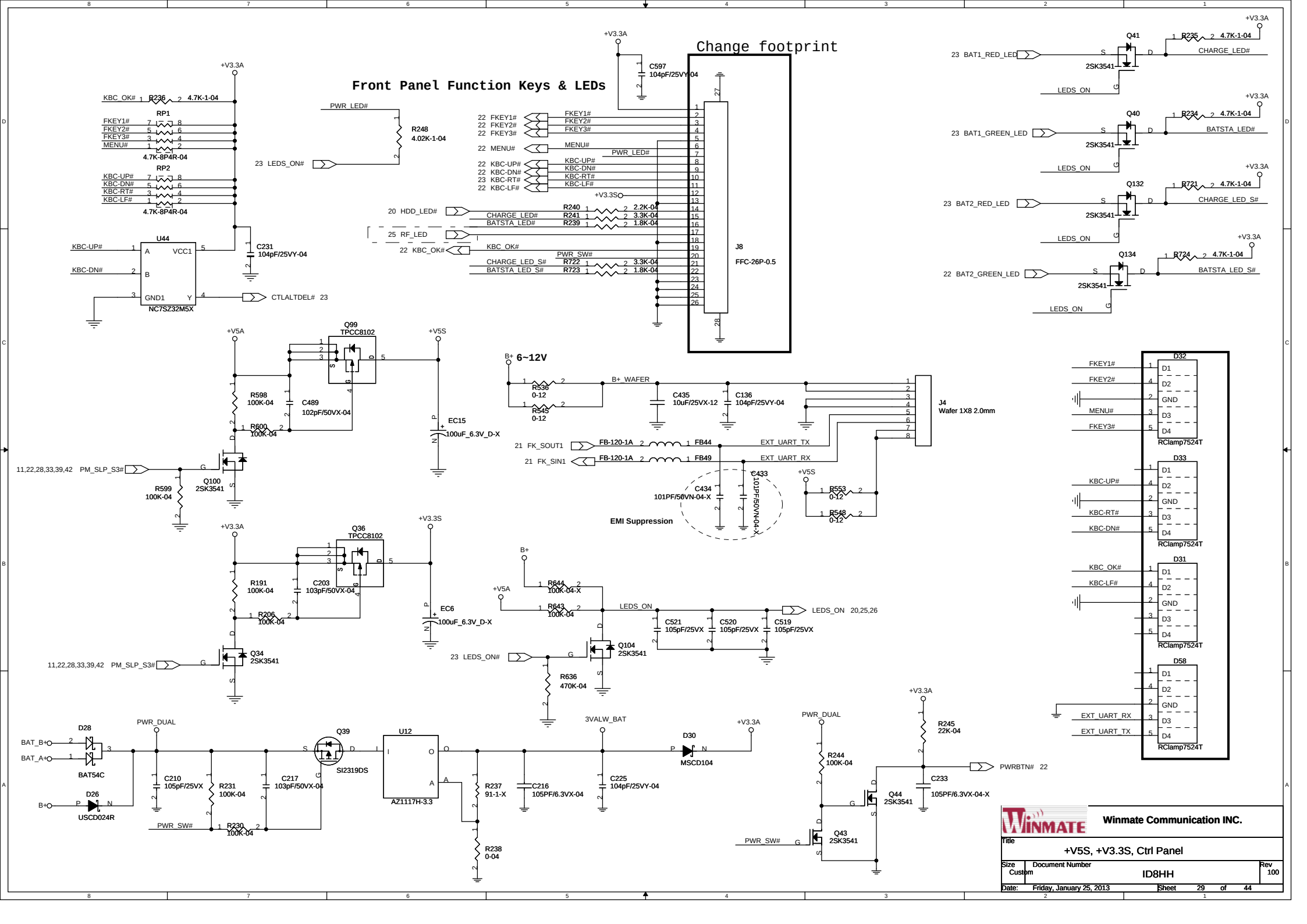

Winmate Communication INC.		
Title: +V5S, +V3.3S, Ctrl Panel		
Size: Custom	Document Number: ID8HH	Rev: 100
Date: Friday, January 25, 2013	Sheet 29 of 44	

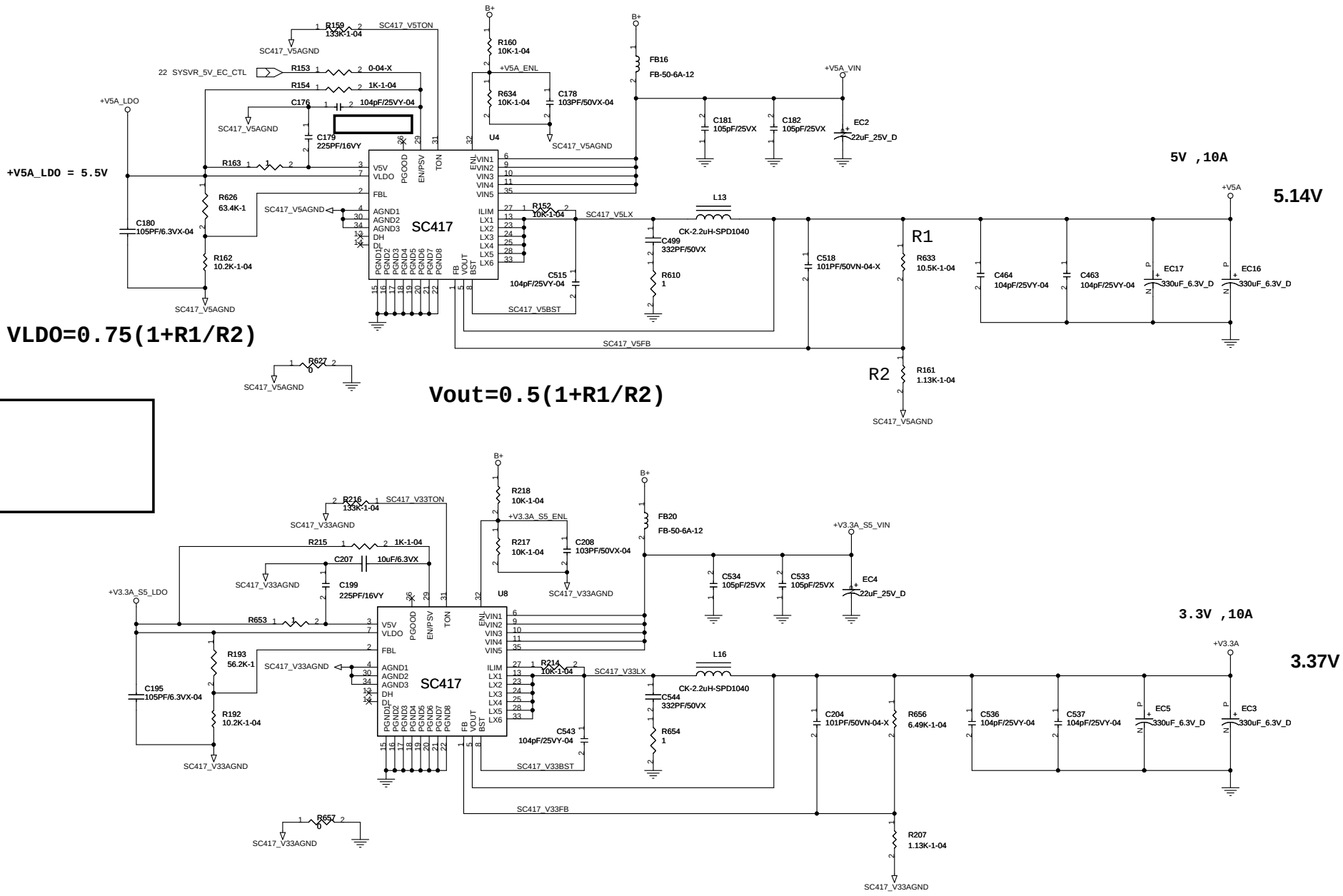

Winmate Communication INC.			
Title: System VR 3.3V & 5V			
Size: A	Document Number: ID8HH		Rev: 100
Date: Friday, January 25, 2013		Sheet 30 of 44	

ISL95831HRTZ 1 Phase For IMVP7 solution

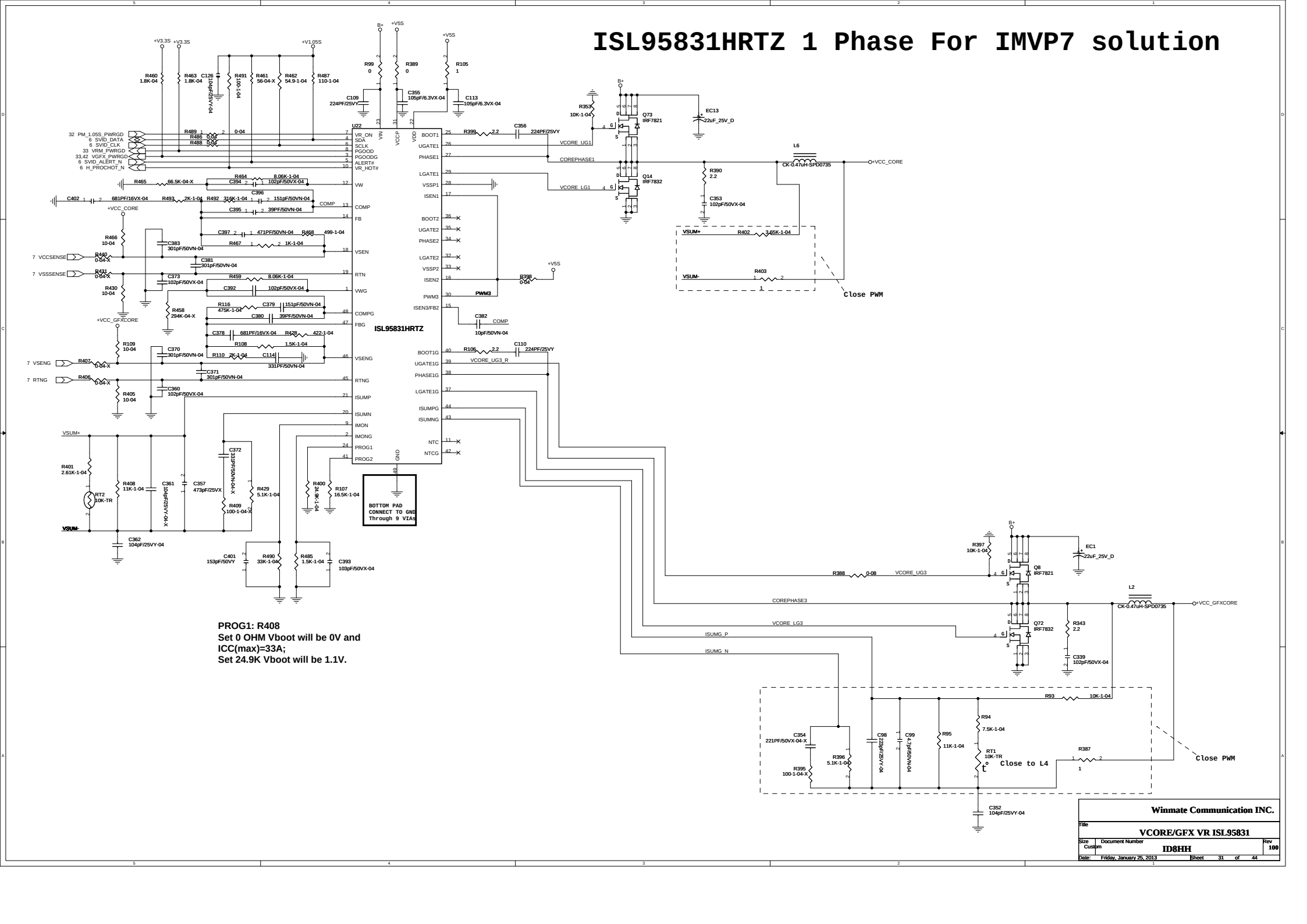

Winmate Communication INC.	
Title	VCORE/GFX VR ISL95831
Size: Custom	Document Number: ID8HH
Rev	100
Date: Friday, January 25, 2013	Sheet 31 of 44

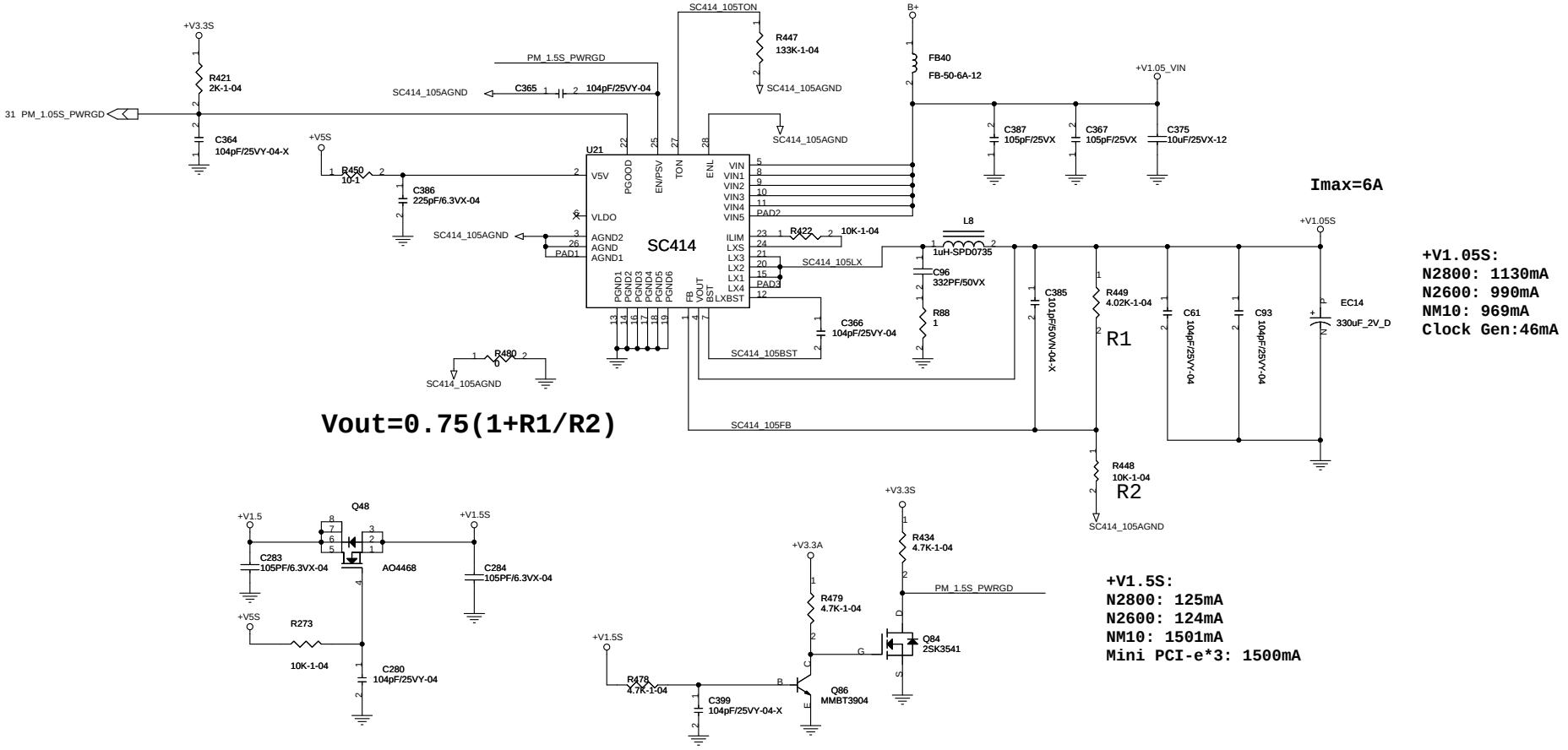

Winmate Communication INC.		
Title: VR 1.05V & 1.5V		
Size: A	Document Number: ID8HH	Rev: 100
Date: Friday, January 25, 2013	Sheet 32 of 44	

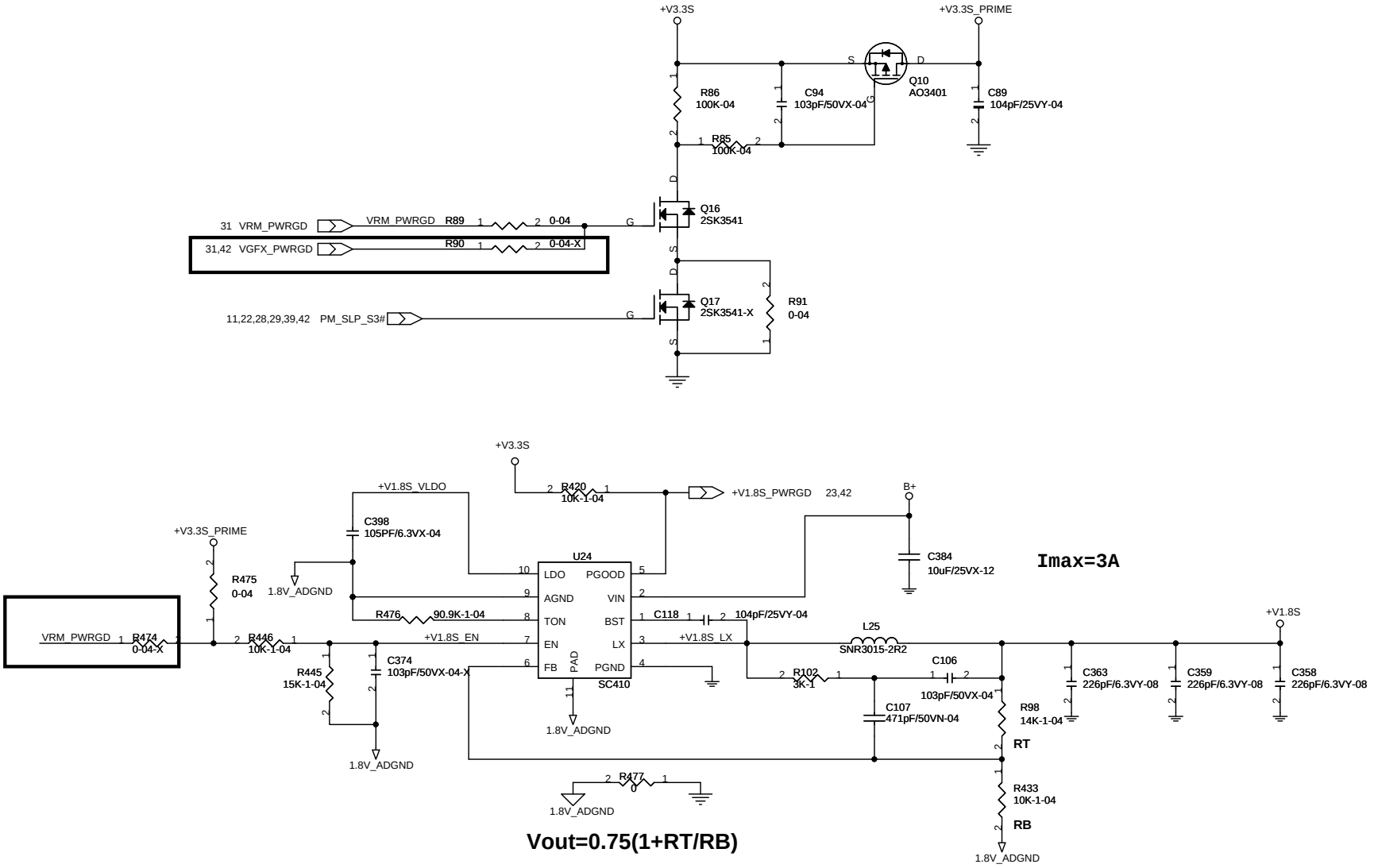

Winmate Communication INC.	
Title	+V3.3S_PRIME,+V1.8S
Size B	Document Number ID8HH
Rev	100
Date:	Friday, January 25, 2013
Sheet	33 of 44

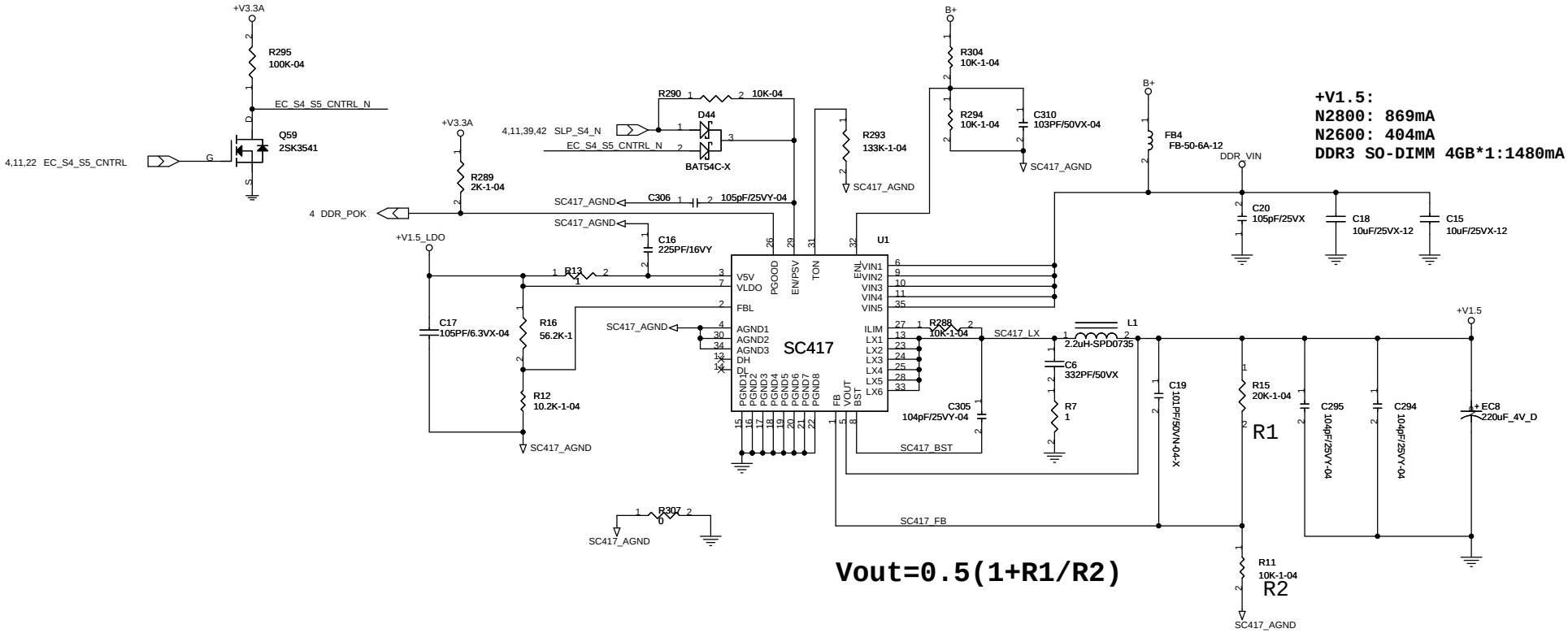

Winmate Communication INC.		
Title: DDR3 VR 1.5V & 0.75V		
Size: Custom	Document Number: ID8HH	Rev: 100
Date: Friday, January 25, 2013	Sheet 34 of 44	

VBATT = cells x(4V+0.4(VVCTL/VREFIN))

Tri-level input for setting number of cells.

GND = 2 cells, float = 3 cells, REFIN = 4 cells.

Routing length should less than 10mm.

Parallel

9 vias

CHGISEL	CHG CURRENT
3V	2.963A
0.37V	0.366A

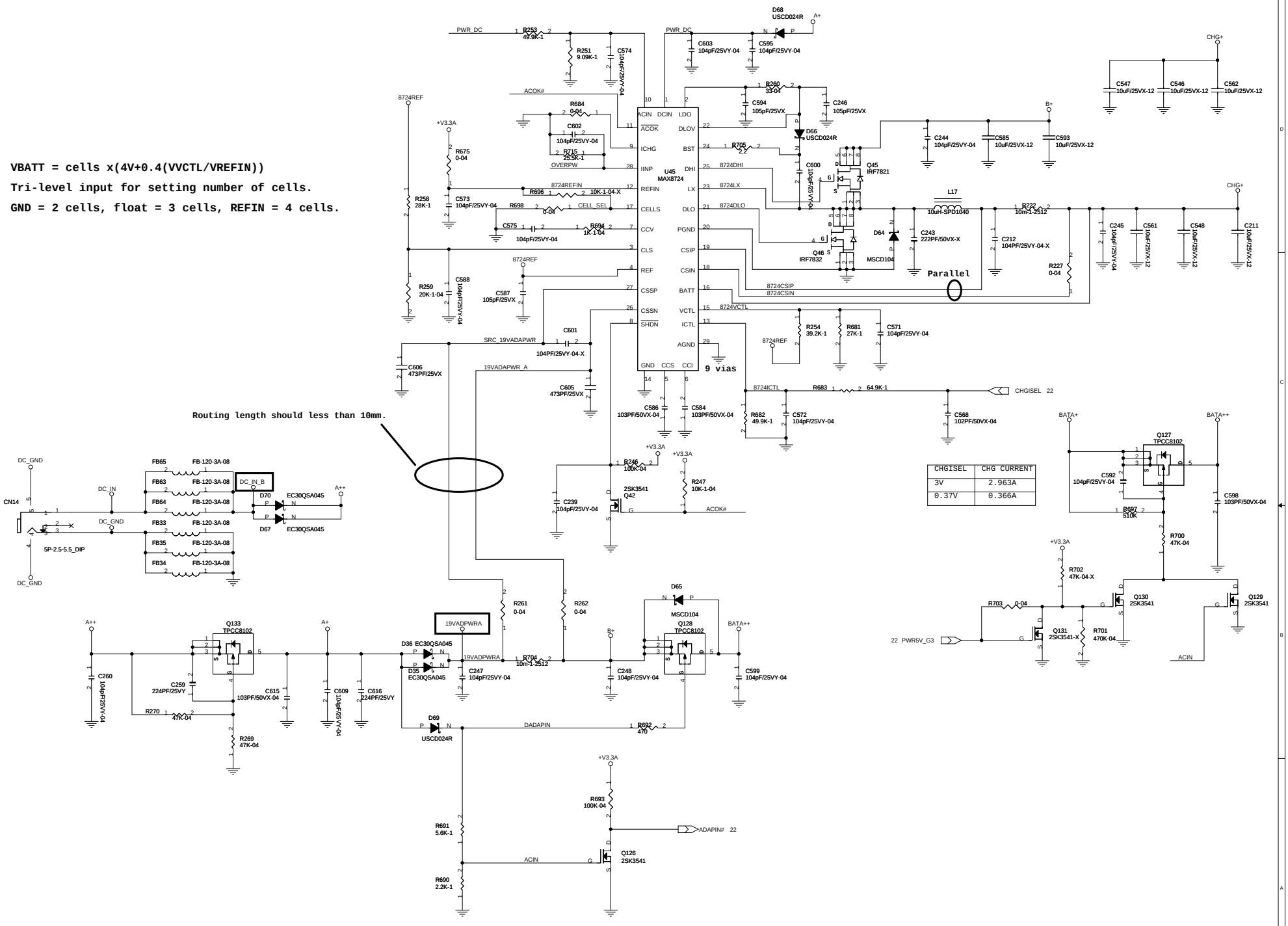

Winmate Communication INC.	
Title	MAX8724 CHARGER
Size: Custom	Document Number: ID8HH
Rev	100
Date: Friday, January 25, 2013	Sheet 35 of 44

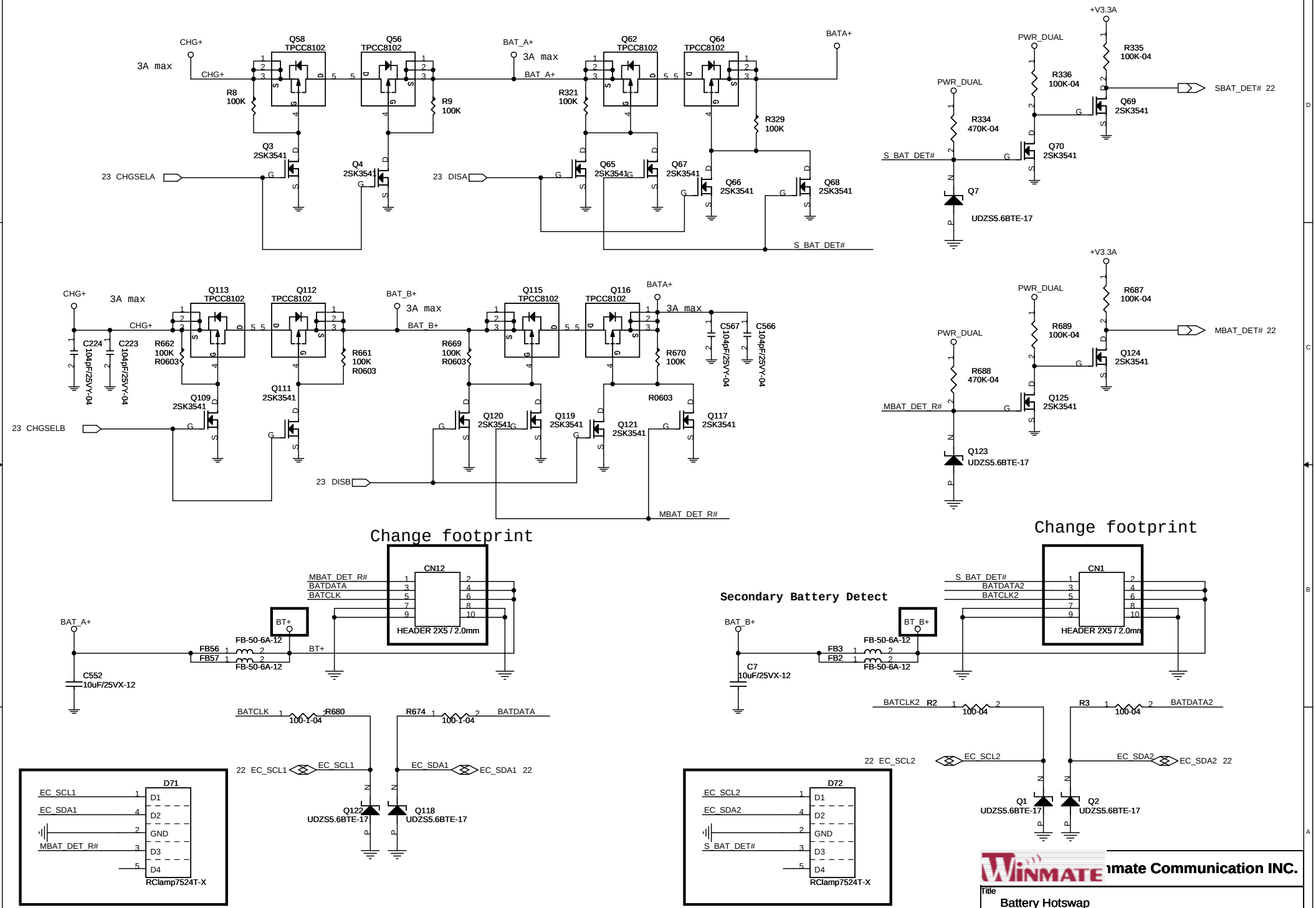

Winmate Communication INC.

Title: Battery Hotswap		
Size: Custom	Document Number: ID8HH	Rev: 100
Date: Friday, January 25, 2013	Sheet 36 of 44	

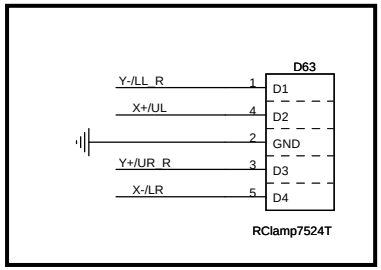

TYPE_SW	
0	4-Wire Touch(default)
1	5-Wire Touch

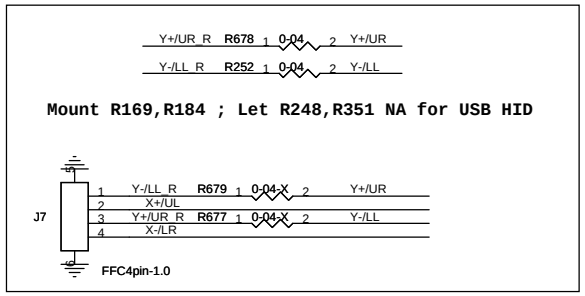

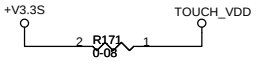

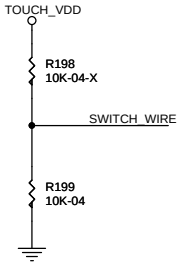

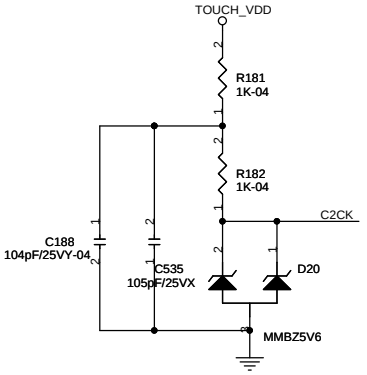

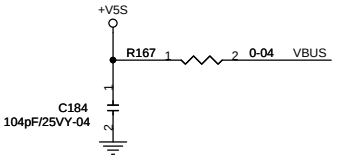

For 3M Touch only

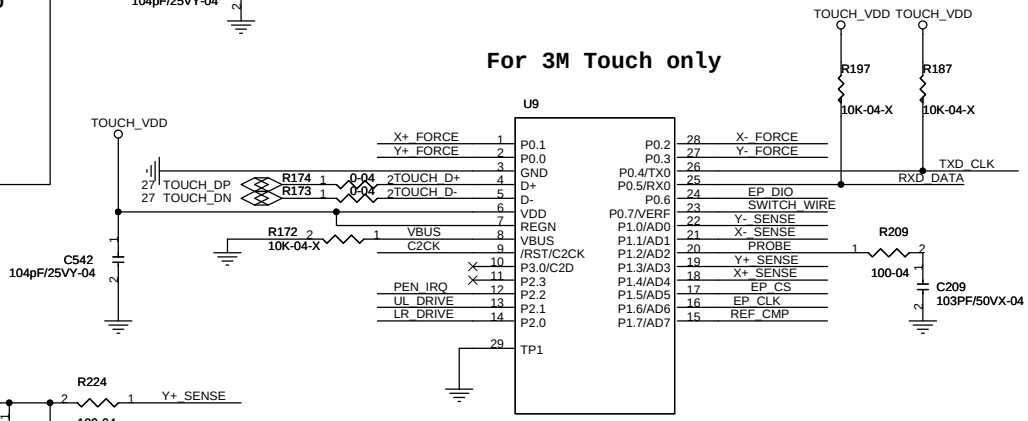

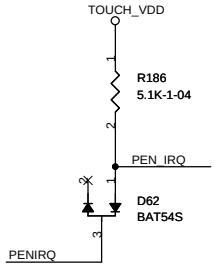

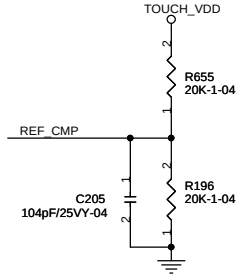

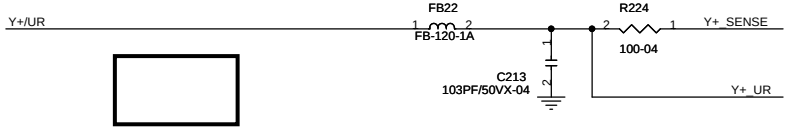

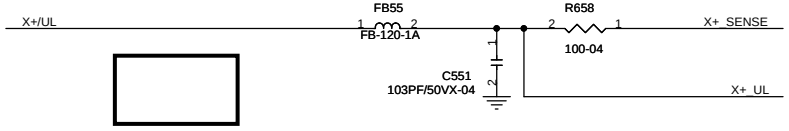

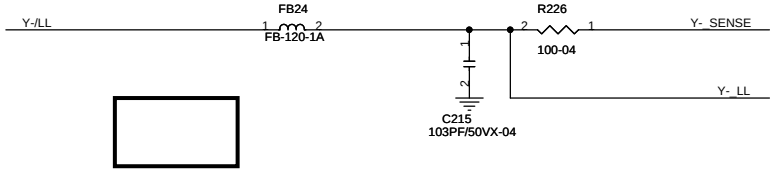

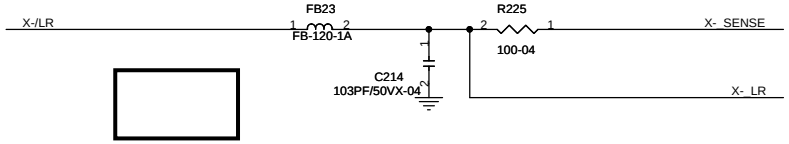

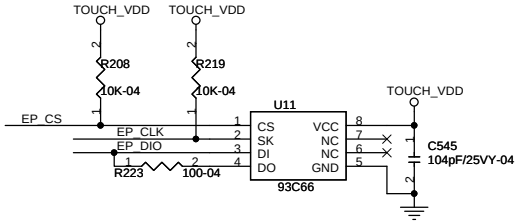

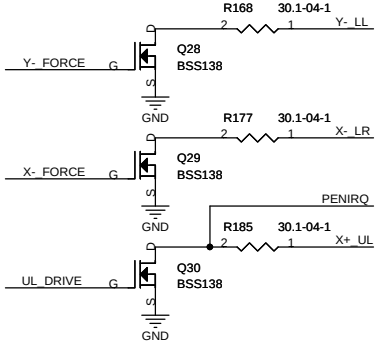

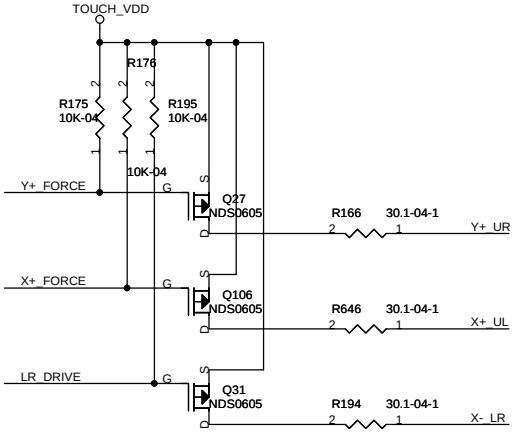

Winmate Communication INC.

Title	TOUCH CONTROLLER		
Size: Custom	Document Number: ID8HH		Rev: 100
Date: Friday, January 25, 2013		Sheet 37 of 44	

ADXL345: 3.3V < 200uA

G sensor Address:
High:0X1D
Low:0X53

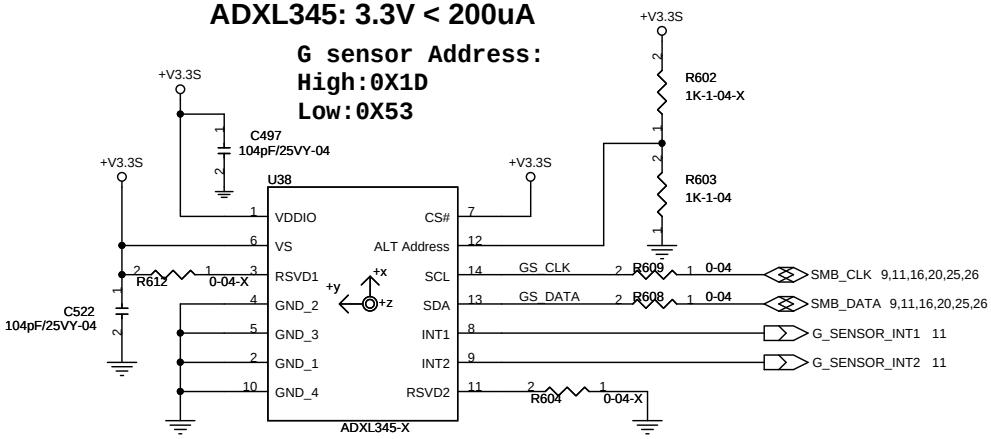

Light sensor Address:
High:0X49
Low:0X29
Float:0X39

CO-Lay

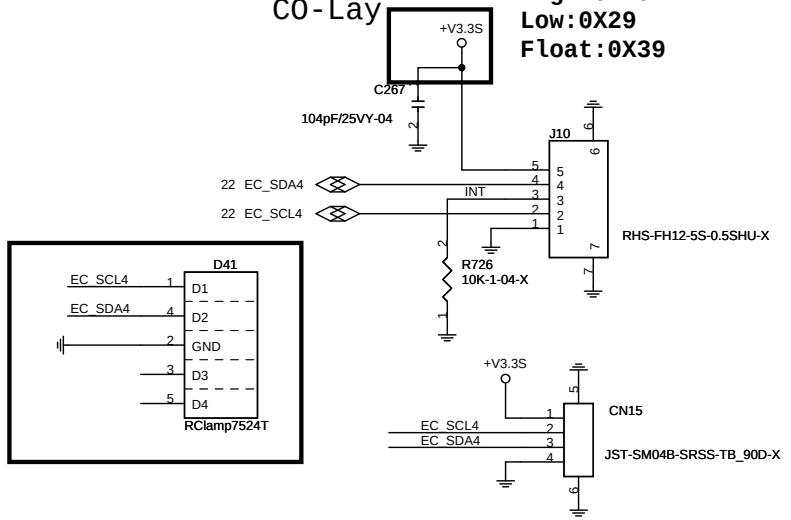

GRYO Sensor

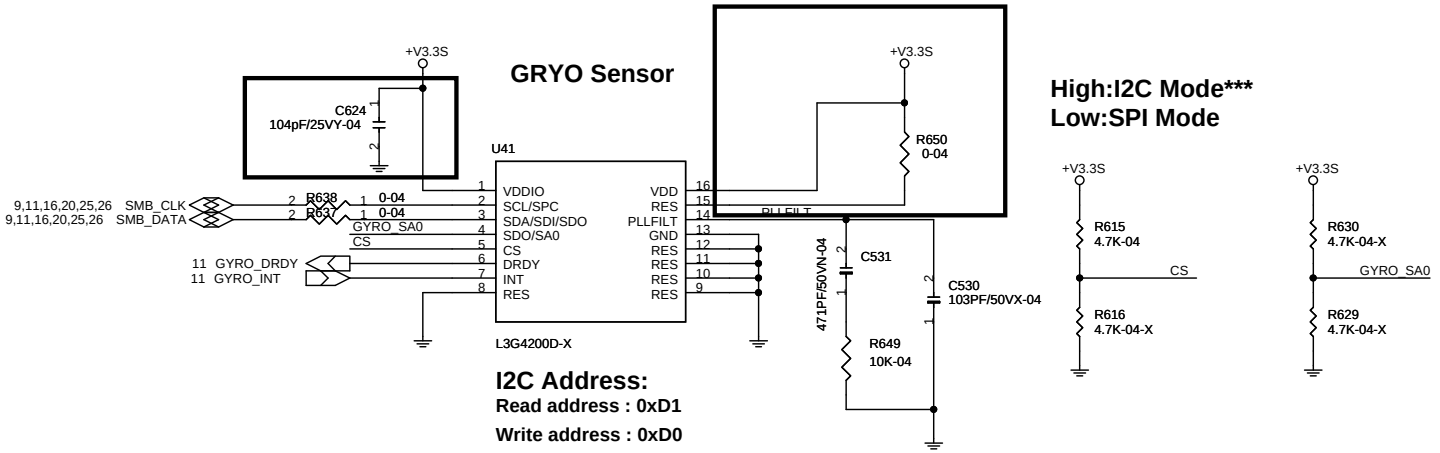

I2C Address:
Read address : 0xD1
Write address : 0xD0
16mA

High:I2C Mode*
Low:SPI Mode

Winmate Communication INC.

Title: G&Light&GryoSensor		
Size: B	Document Number: ID8HH	Rev: 100
Date: Friday, January 25, 2013	Sheet 38 of 44	

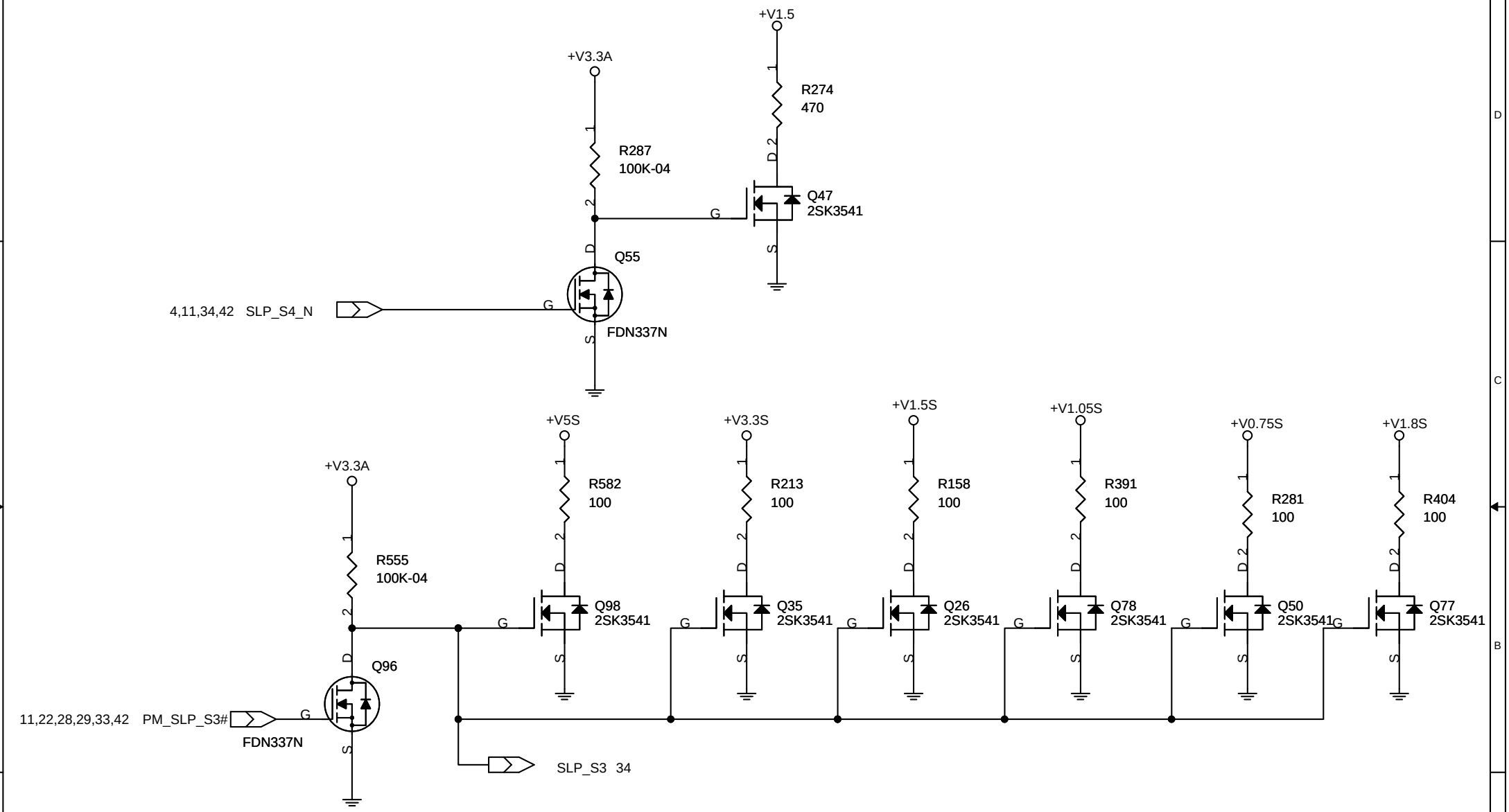

Winmate Communication INC.		
Title: Discharge Circuit		
Size: Custom	Document Number: ID8HH	Rev: 100
Date: Friday, January 25, 2013	Sheet 39 of 44	

GL823L: Vcc = 50mA

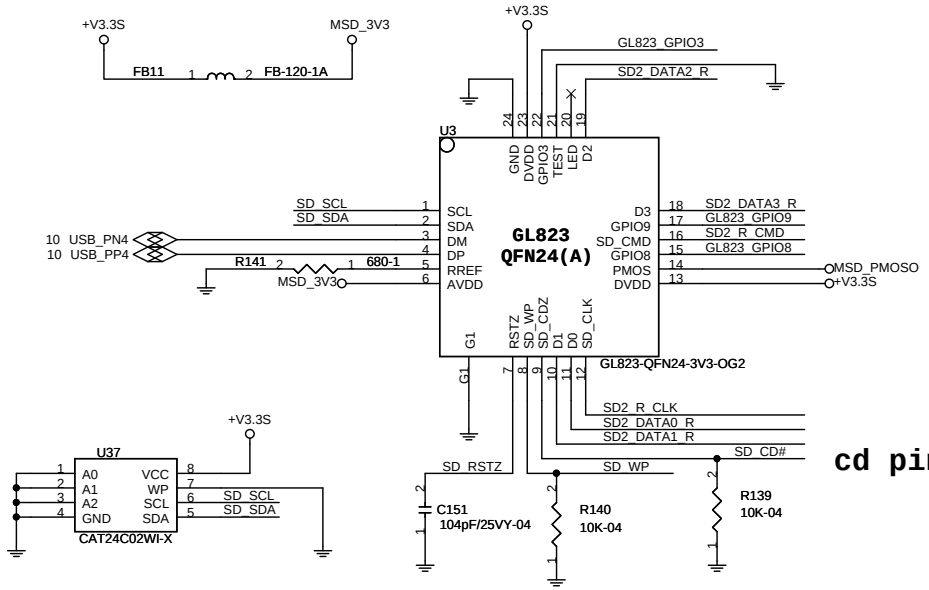

cd pin需確認

When use microSD Connector,
SD_WP need to connect to Ground

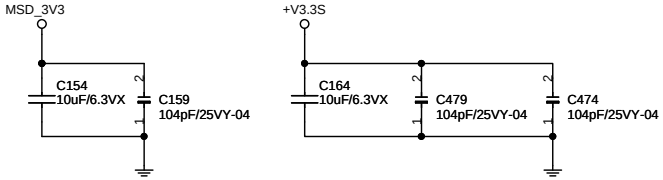

For ESD, Close to SD connector

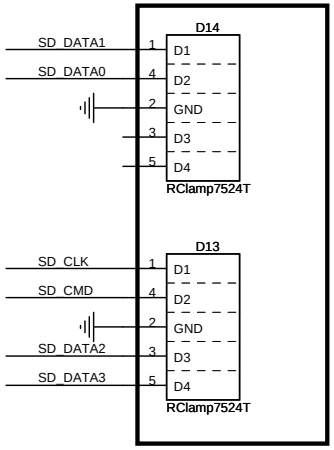

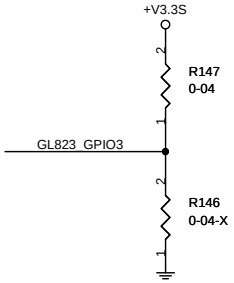

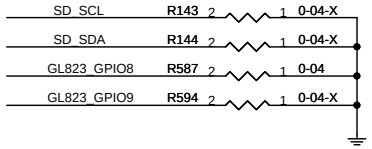

Application Note

SCL	FUNCTION
NC	**Default "Generic STORAGE DEVICE" String**
GND	"USB Flash Disk" String

SDA	FUNCTION
NC	**Default Support Serial Number**
GND	Non Support Serial Number

GPIO8	GPIO9	FUNCTION
NC	NC	Default Configuration
NC	GND	Remote wake up enable
GND	**NC**	**Power saving enable**
GND	GND	ESD mode enable

Winmate Communication INC.

GL823L & SD Card

Size	Document Number	Rev
B	ID8HH	100

Date: Friday, January 25, 2013 Sheet 40 of 44

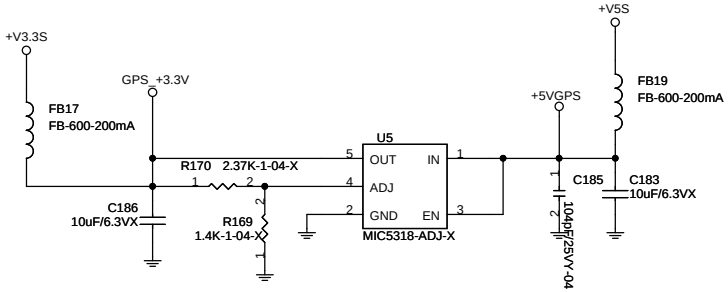

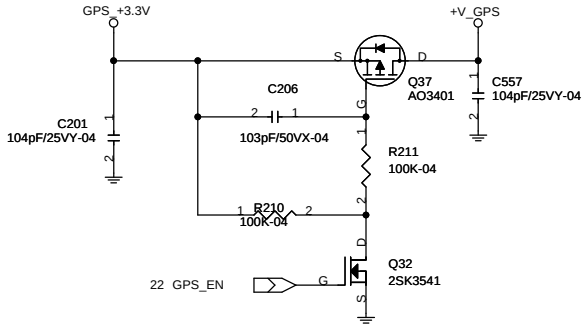

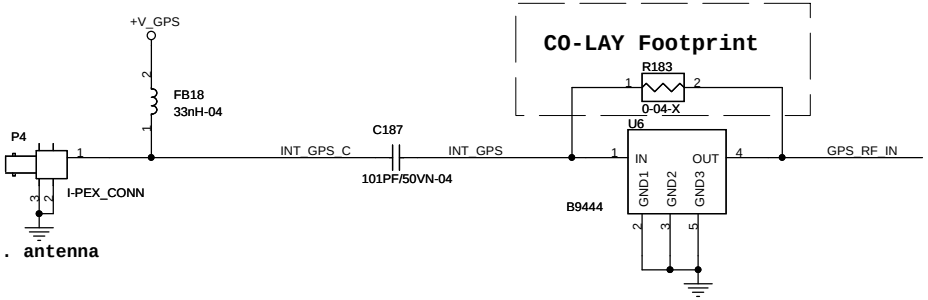

V1	V2	PATH
H	L	J1-J3(Ext. Antenna)
L	H	J1-J2(Int. Antenna)

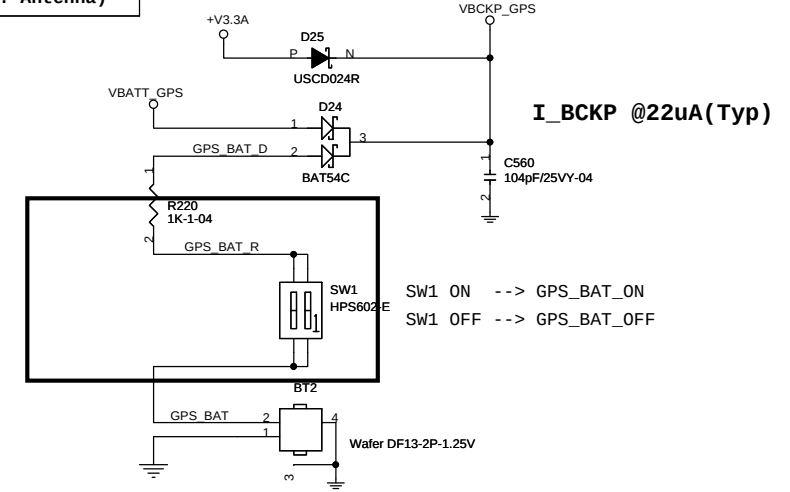

I_BCKP @22uA(Typ)

GPS_+3.3V @67mA(Max)

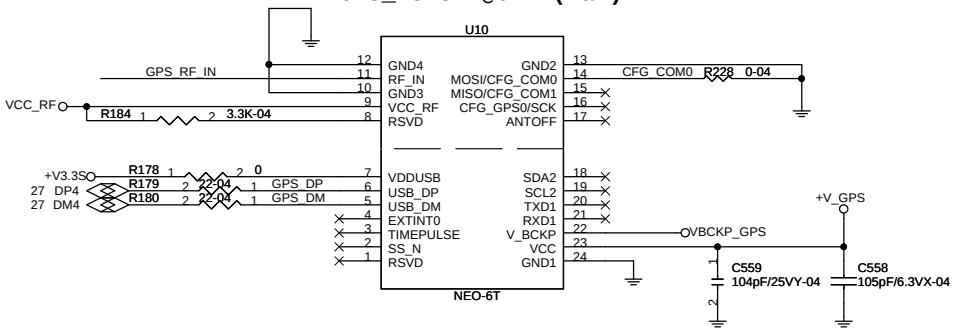

AGPS option is reserved

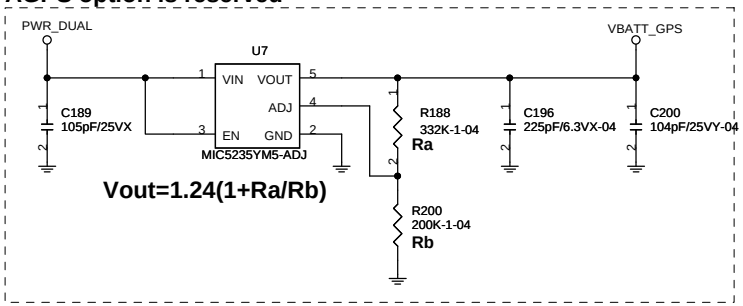

Winmate Communication INC.

Title	UBLOX GPS NEO-6Q	
Size: Custom	Document Number: ID8HH	Rev: 100
Date: Friday, January 25, 2013	Sheet 41 of 44	

Delay 99ms

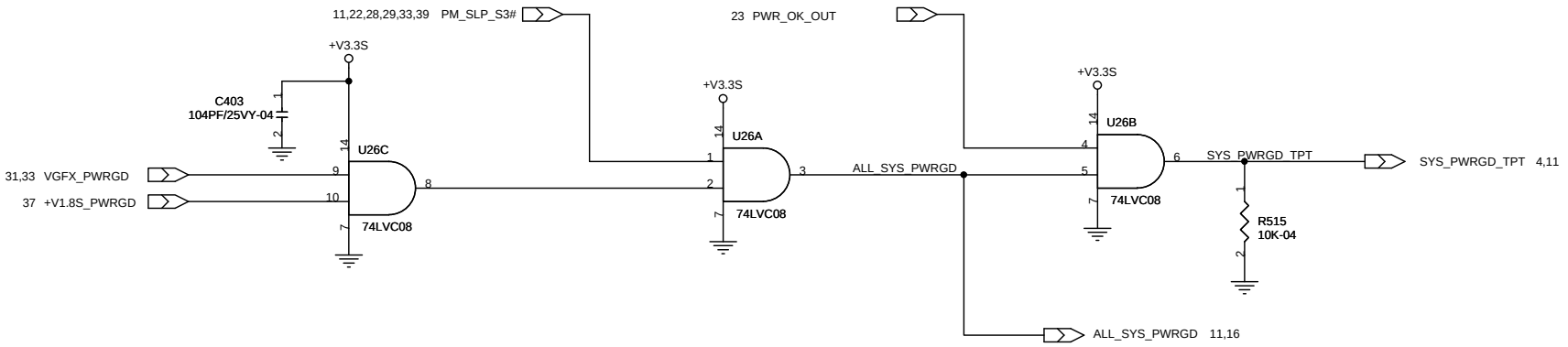

Place all pads together

Power sequence measure points

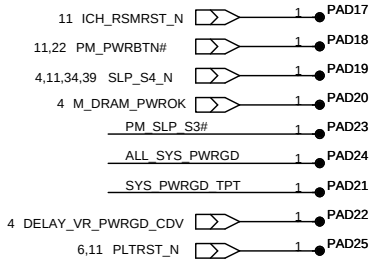

Winmate Communication INC.

Title: POWER SEQUENCE CONTROL		
Size: B	Document Number: ID8HH	Rev: 100
Date: Friday, January 25, 2013	Sheet 42 of 44	

Power Mode Decision Flow :

PWR_SW# → 3VALW_BAT → +V3.3A → EC Initial →

Power Mode Decision	
ADAPIN# = 0	Adapter Mode
ADAPIN# = 1 MBAT_DET# or -SECBAT_DET= 0	Battery Mode

Power On Sequence Flow :

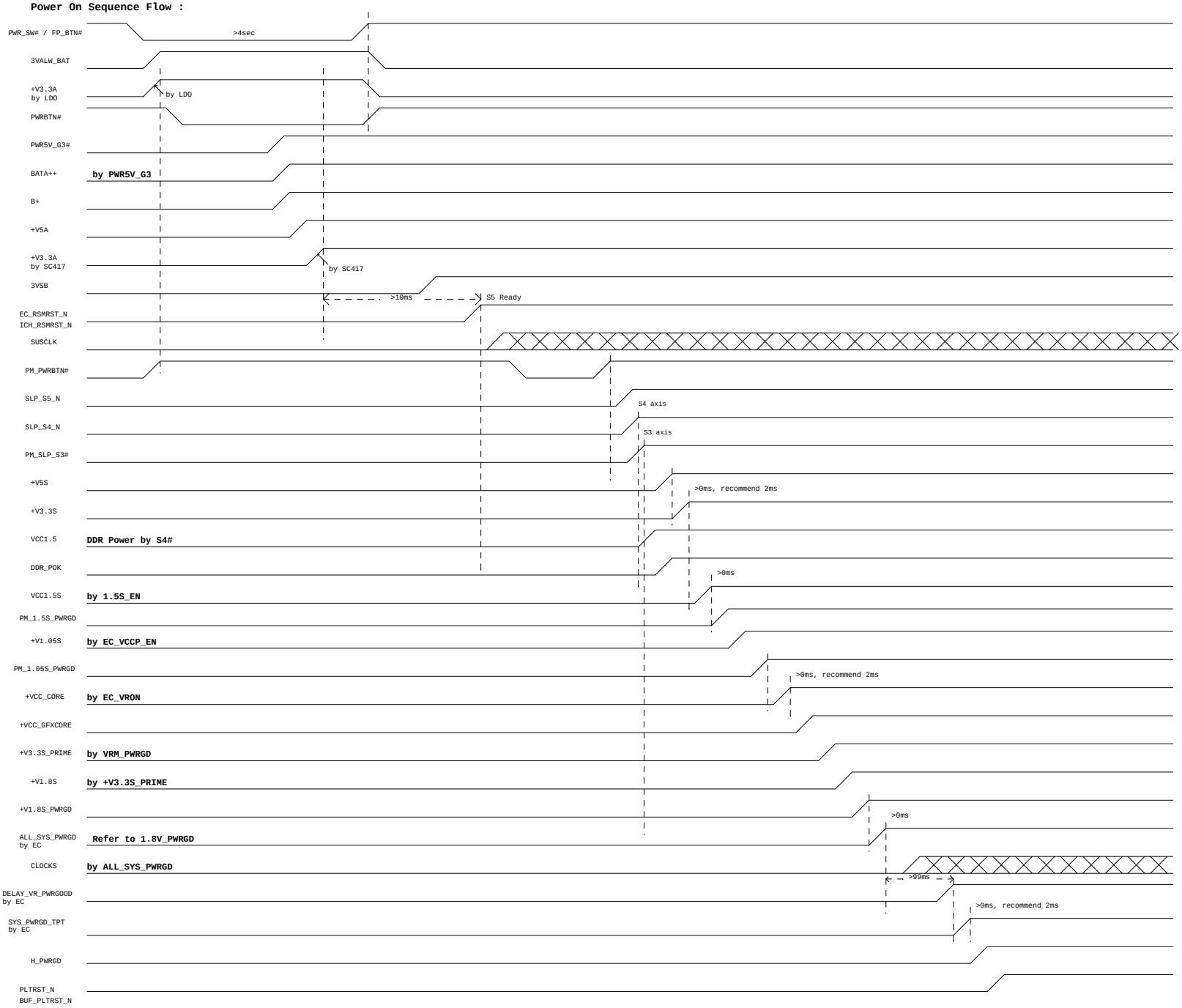

Winmate Communication INC.		
Title: Power Sequence Chart		
Size: Custom	Document Number: IDBHH	Rev: 100
Date: Friday, January 25, 2013	Sheet 43 of 44	

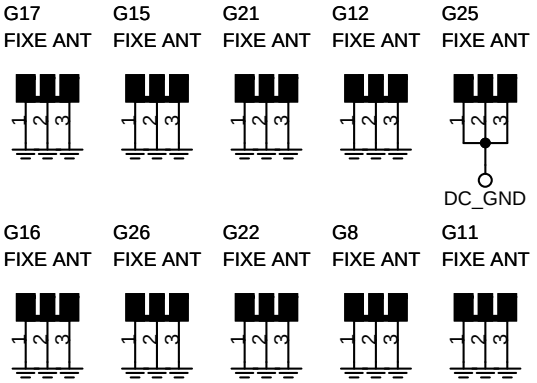

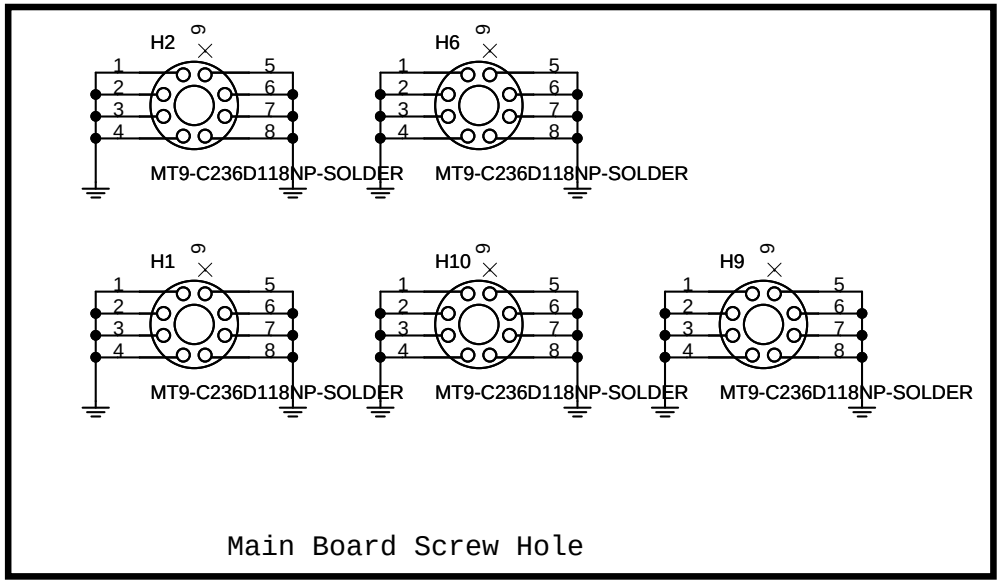

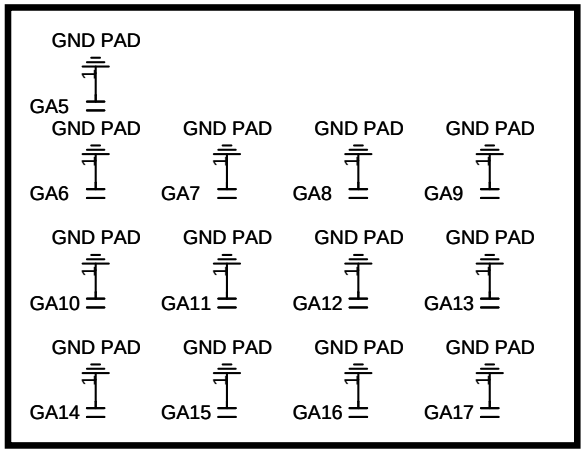

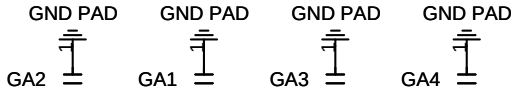

EMI PAD

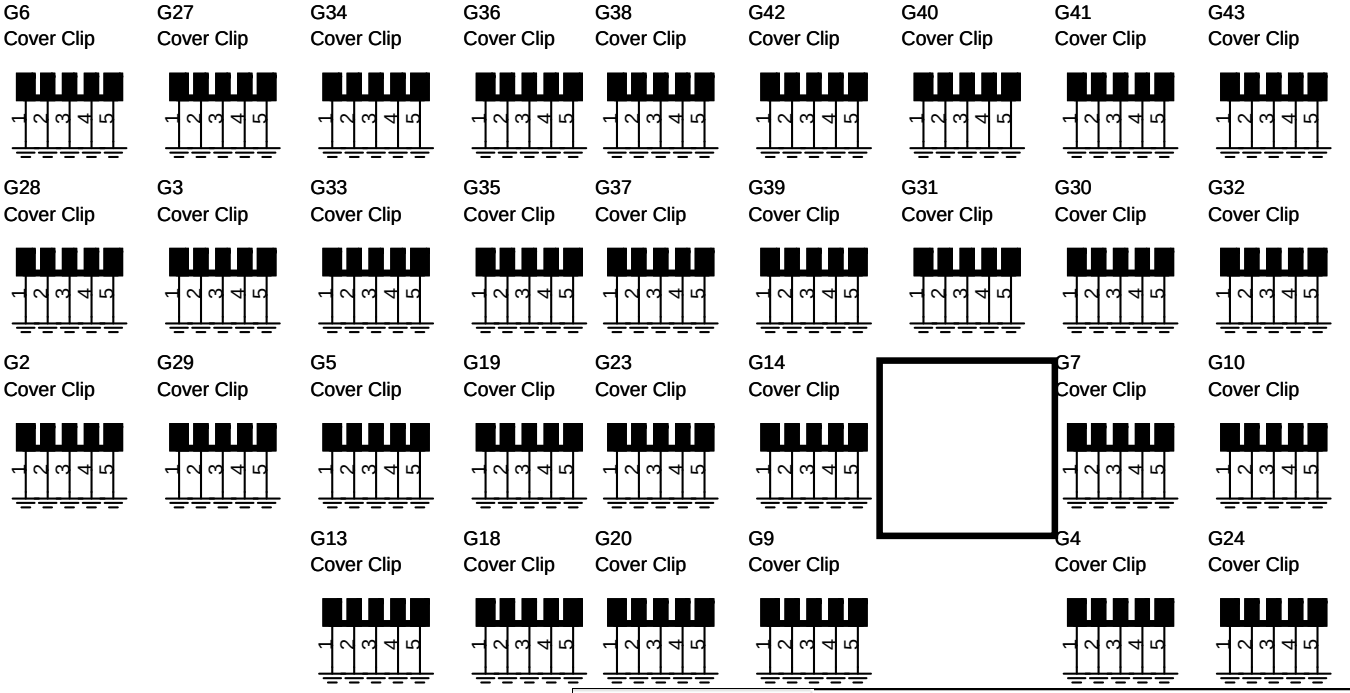

Winmate Communication INC.

Title: Screw Hole		
Size: A	Document Number: ID8HH	Rev: 100
Date: Friday, January 25, 2013	Sheet 44 of 44	