InnoComm Confidential
Release to Matsunichi

Delphi

AP

PP3 (R007)

innocomm InnoComm Mobile Technology Corp.		
Project Name : Delphi 6107	Title : OMAP 4 Tablet PC (WiFi Version)	
Size : A4	Document Number : Cover	Rev : R007
Date: Thursday, May 24, 2012	Sheet : 1 of 30	

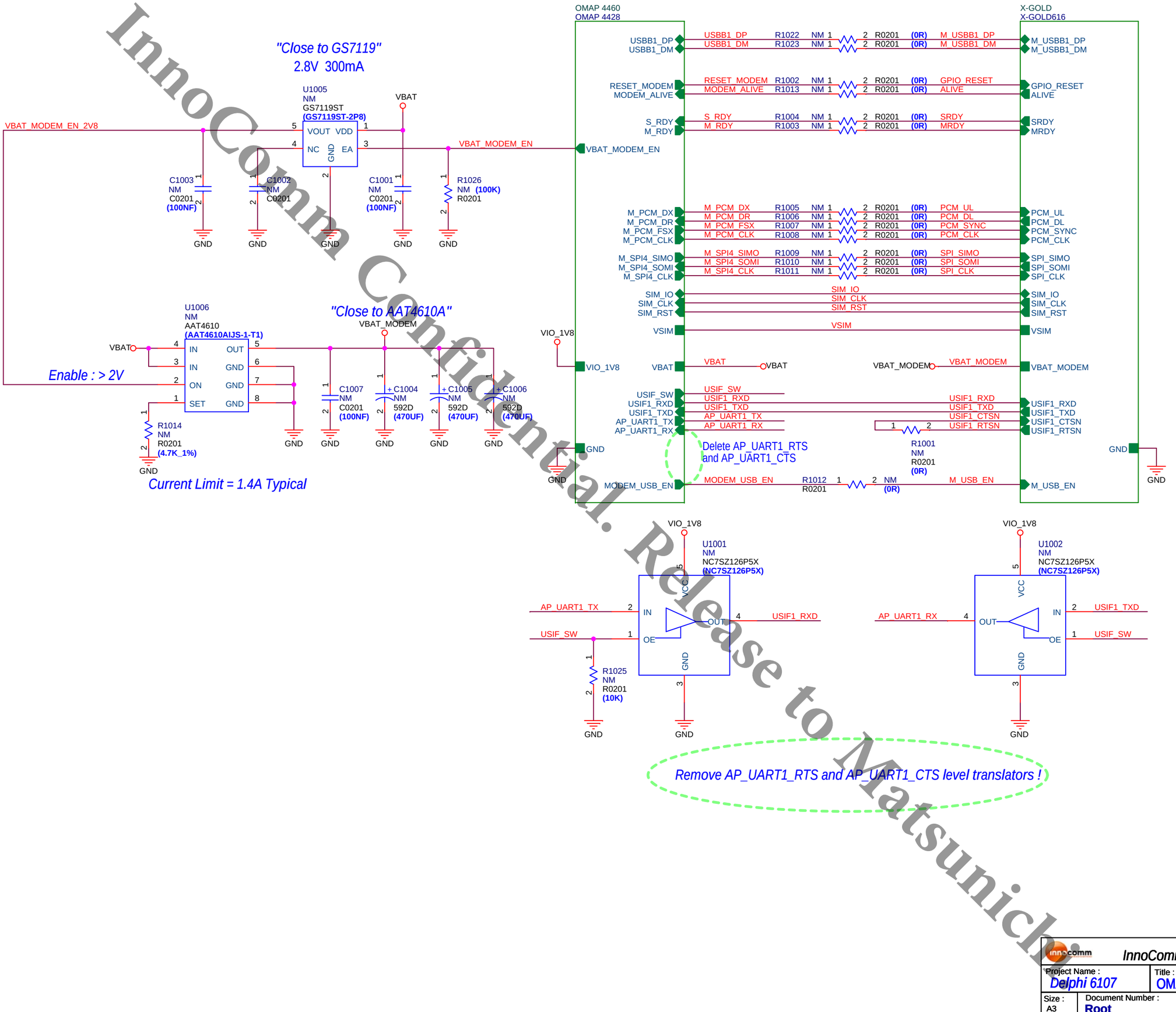

InnoComm Confidential. Release to Matsunich

InnoComm Mobile Technology Corp.			
Project Name : Delphi 6107		Title : OMAP 4 Tablet PC (WiFi Version)	
Size : A3	Document Number : Root		Rev : R007
Date: Thursday, May 24, 2012		Sheet : 2	of 30

EP1 R001 (OMAP 4430)
OMAP 4430 + TWL6030 + TWL6040 A1 + TI bq24161YFF
HW_VER[S3, S2, S1] = 000
EP1 R002 (OMAP 4460)
OMAP 4460 1.2GHz + TWL6032 ES 1.0 + TWL6040 A1
HW_VER[S3, S2, S1] = 001
Change CPU from OMAP 4430 to OMAP 4460
Move S_RDY from GPIO_WK7 to GPIO_WK8
Change PMIC from TWL6030 to TWL6032
Add U2301 800mA External Charger bq24210, in order to get extra 500mA charging current
Change Freescale g-Sensor and Freescale eCompass to ST Microelectronic g-Sensor + eCompass LSM303DLHC
Add U2502 TPS73601DBVT 400mA LDO to Support SD 3.0 SDR50 Mode
EP2 R003 (OMAP 4460)
OMAP 4460 1.5GHz + TWL6032 ES 1.0 + TWL6040 A1
HW_VER[S3, S2, S1] = 010
Change external charger IC U2301 bq24210 DPM resistor R2301 from 5.1K ohm to NM. (DPM Threshold = Battery + 100mV)
Swap components of L1503 and L1504
FP R004 (OMAP 4460)
OMAP 4460 1.5GHz + TWL6032 ES 1.1 + TWL6040 A1
HW_VER[S3, S2, S1] = 011
Change light sensor from ELAN ePL5804 to ePL6804
Remove 800mA External Charger U2301 TI bq24210 circuit. (Two battery chargers might interference one aother.)
Remove Touch Key Circuit (Android 4.0 Icecream Sandwitch does not support touch key !)
Change OMAP Bootup Sequence Configuration from SYS_BOOT[5:0] = 0b010110 (USB -> UART -> MMC1 ->MMC2/1) to SYS_BOOT[5:0] = 0b110110 (MMC2/1 -> USB -> UART -> MMC1).
PP R005 (OMAP 4460)
OMAP 4460 1.5GHz + TWL6032 ES 1.1 + TWL6040 A1
HW_VER[S3, S2, S1] = 100
Add External Charger Circuit U2301 TI bq24161YFF
PP2 R006 (OMAP 4460)
OMAP 4460 1.5GHz + TWL6032 ES 1.1 + TWL6040 A2
HW_VER[S3, S2, S1] = 101
Seperated Ground Plans for PMIC TWL6032
Add 10uF capacitors C1714 and C1715 to improve camera Low Lux Noise.
Add 100nF capacitor C2322 as a filter for external battery charger IC TI bq24121 temperature sensing voltage.
Change C2221 from 1uF to 470nF. Fixe the LCD panel backlight discontinuous slope issue at high brightness.
PP3 R007 (OMAP 4460)
Change B1501 ~ B1505 to Short pad.
Add T1701 (NM), T1702 (NM) ,TP2302
Add 10uF capacitors C1716 and C1717(NM) to improve camera Low Lux Noise.
Remove R1711
Change SP2 footprint to SQ-46G

InnoComm Confidential. Release to Matsunichi.

innocomm InnoComm Mobile Technology Corp.			
Project Name : Delphi 6107		Title : OMAP 4 Tablet PC (WiFi Version)	
Size : A4	Document Number : Change List		Rev : R007
Date: Thursday, May 24, 2012		Sheet : 3	of 30

InnoComm Confidential
Release to Matsunichi

J2103 30Pin Comector VBUS — USB_VBUS

VBAT — bq24161YFF — VBAT_PACK — BATTERY

PowerPath

U1501 TWL6032

VBUS — OTG_USB_ID

VBAT → Vin

Vout → VPMIC_V2V1

Vout → VIO_1V8

U1106 AAT4610A (Vin, EN, Vout) — VBAT

U1105 GS7119ST_2P8 (Vin, Vout)

Modem (VBAT_MODEM, VSIM_VAR) — VSIM — J1802 (VCC/VPP, SIM)

U1901 WiFi/BT/GPS (VBAT_FEM, VIO_1V8_WL) — VBAT, VIO_1V8

U2101 HDMI Charge Pump (VCCA/1.8V, Vin, Vout/5V) — VBAT — J2104 (HDMI_5V, 30Pin Comector)

U1101 OMAP4

TWL6032		OMAP4
Vin / Vout	VCORE1_OMAP_MPU ~1.5V / 1600mA	VDD_MPU, VDD_IVA_AUDIO
Vin / Vout	VCORE2_OMAP_IVAUD ~1.5V / 650mA	
Vin / Vout	VCORE3_OMAP_VDD ~1.5V / 620+20mA	VDD_CORE, VDDA_DDL_LPDDR
Vin / Vout	VPMIC_V1V29, V1V29_OMAP_LPDDR2 1.29V/ 265+25+60+20mA	VDDQ_LPDDR2, VDDCA_LPDDR2, VDDA_LDO_EMU_WKUP, VDDS_1P2
Vin / Vout	VPMIC_VMEM ~?V /?mA	POP_MEM_POWER — I2C1 — 4.7K ohm — VIO_1V8; I2C2; I2C3; I2C4
VRTC	VCXIO — VCXIO_1V8	VDDA_DSI1, VDDA_DSI2, VDDA_CSI1, VDDA_CSI2
BOOT0	VPP — VPMIC_OMAP_VPP_CUST — R1304 NM — VPP_CUST	VPP_CUST, VPP_SPT
BOOT1	VUSB — VPMIC_VUSB_3V3	VDDA_USBA0OTG_3P3V
BOOT2	VDAC — VPMIC_VDAC	VDDA_VDAC
BOOT3	VMMC — VDD_MMC1 (200mA)	VDDS_SDMMC1

VPMIC_VRTC — R1508 O ohm — PHO_BOOT0

VPMIC_VRTC — R1511 NM — PHO_BOOT1

VPMIC_VRTC — R1510 1OK ohm — PHO_BOOT2

R1512 O ohm — PHO_BOOT3

VPMIC_VRTC — R1509 1OK ohm

BOOT3 = '1' -> Enable VAUX1 LDO to eMMC Core Voltage
BOOT2 = '0' -> VAUX1 LDO default = 2.9V
BOOT1 = '1' -> VMEM = 1.2V (S4b LPDDR2 used)
BOOT0 = '0' -> High battery thresholds for VBATMIN

U2502 (400mA) TPS73601 — J1801 Micro SD (VDD)

BT1501 Backup Battery — VBACKUP

VAUX1 — VeMMC_2V9 — U2401 (2.8V eMMC 1.8V) — VIO_1V8

VAUX2 — V_GS_2V8 — U1601~4 (2.8V Sensors 1.8V)

VAUX3 — V_GS_1V8

Not Use — VANA

VUSIM — V_CAM_1V8

V_CAM_1V8 → J1701 (1.8V 2M Camera 2.8V) — V_CAM_2V8

V_CAM_1V8 → J1702 (1.8V 5M Camera 2.8V) — V_CAM_2V8

U1502 TPS62234 (Vin, Vout) — VBUCK_2V1 — VBAT

U2305 GS7119ST_3P3 (Vout, Vin) — VBAT

J1703/U1710~11 Touch Peanl I2C Level Translator (2.8V, 1.8V) — VTP_3V3; VTP_1V8 (VLCM_1V8)

U2304 GS7119ST_2P8 (Vout, Vin) — VBAT

U2303 REFCLK

VBAT, VIO_1V8, VPMIC_VDAC → VBAT, VDD_ANA, VDD_DIG

VLDO — VTCXO — Y2301 NDK-38.400MHz (VCC)

InnoComm Mobile Technology Corp.	
Project Name : Delphi 6107	Title : OMAP 4 Tablet PC (WiFi Version)
Size : A3	Document Number : Power Structure — Rev : R007
Date: Thursday, May 24, 2012	Sheet : 4 of 30

InnoComm Confidential. Release to Matsunichi

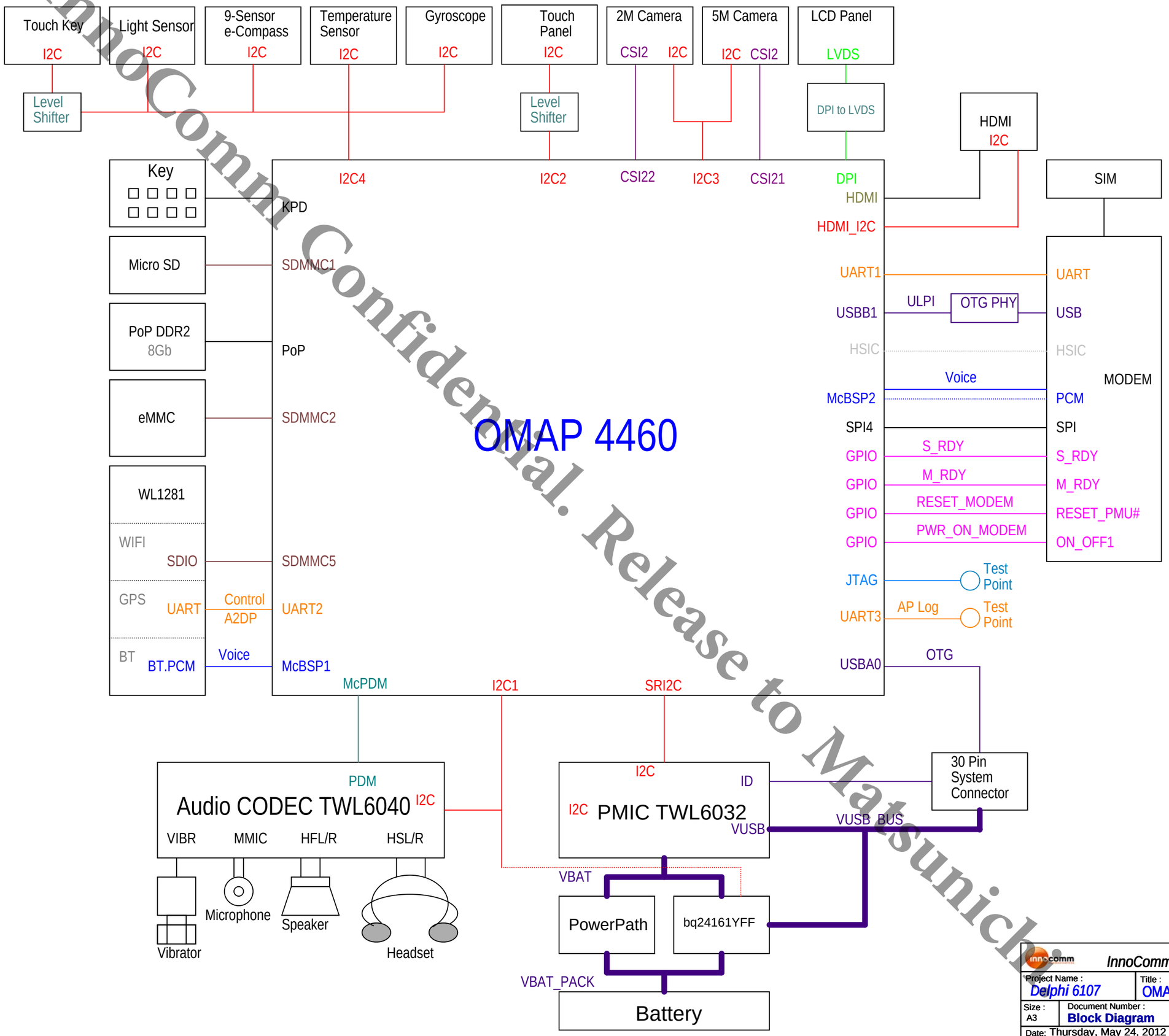

OMAP 4460

InnoComm Mobile Technology Corp.		
Project Name : Delphi 6107	Title : OMAP 4 Tablet PC (WiFi Version)	
Size : A3	Document Number : Block Diagram	Rev : R007
Date: Thursday, May 24, 2012	Sheet : 10 of 30	

OMAP / Host Signaling I/Fs

Component ROOM = OMAP

U1101A
OMAP4428 111-1003315

Inncomm Confidential
Initial Release to Manufacturing

MODEM PCM
2 M_PCM_CLK — AD27
2 M_PCM_DR — AD26
2 M_PCM_DX — AD25
2 M_PCM_FSX — AD28

BT Voice
19 BT_PCM_CLK — R1114 1 — 2 0R R0201 — AC26
19 BT_PCM_DR — R1115 1 — 2 0R R0201 — AC25
19 BT_PCM_DX — R1116 1 — 2 0R R0201 — AB25
19 BT_PCM_FS — R1117 1 — 2 0R R0201 — AC27

6040 PDM
14 h_PDM_UL_DATA — AG25
14 h_PDM_DL_DATA — AF25
14 h_PDM_FRAME — AE25
14 h_PDM_CLK — AF26
14 h_ABE_CLKS — AH26

Modem USB
22 LCD_BL_EN — AE24
21 HSUSB1_NXT — AF24
21 HSUSB1_CLK — AG24
21 HSUSB1_STP — AH24
21 HSUSB1_DIR — AE19
21 HSUSB1_D[0:7]

HSUSB1_D0 — AF18
HSUSB1_D1 — AG18
HSUSB1_D2 — AE17
HSUSB1_D3 — AF17
HSUSB1_D4 — AH17
HSUSB1_D5 — AE16
HSUSB1_D6 — AF16
HSUSB1_D7 — AG16

TP-0.5 TP1113 1 — M_HSIC_DATA — AF14
TP-0.5 TP1114 1 — M_HSIC_STROBE — AE14

MICRO SD
18 SD_CLK — R11021 2 33R MMC1_CLK — D2
18 SD_CMD — R11031 2 33R MMC1_CMD — E3
SD_DAT0 R11041 2 33R MMC1_DAT0 — E4
SD_DAT1 R11051 2 33R MMC1_DAT1 — E2
SD_DAT2 R11061 2 33R MMC1_DAT2 — E1
SD_DAT3 R11071 2 33R MMC1_DAT3 — F4
18 SD_DAT[0:3] — R0201 — F3 F1 G4 G3

BT UART2
19 BT_UART2_CTS — AB26
19 BT_UART2_RTS — AB27
19 BT_UART2_RX — AA25
19 BT_UART2_TX — AA26

MODEM UART1
2 AP_UART1_RX — AF22
Delete AP_UART1_CTS and AP_UART1_RTS
2 AP_UART1_TX — AE22
AG22
21 LOG_UART3_RX — AE23
21 LOG_UART3_TX — AF23
AG23
AH23
F27
F28
G27
G28

MODEM SPI4
2 M_SPI4_CLK — AE21
2 M_SPI4_SIMO — AF20
2 M_SPI4_SOMI — AF21
AE20
TP-0.5 TP1115 1 — UART4_RX — AG20
TP-0.5 TP1116 1 — UART4_TX — AH19

HDMI
R0201
VIO_1V8 — R1108 1 — 2 100K
18 SIM_DET — H4 J2 G2 J1 K1 H2 H3

21 HDMI_HPD — B9
21 HDMI_CEC — B10
21 HDMI_SCL — A8
21 HDMI_SDA — B8
21 HDMI_D0+ — C10
21 HDMI_D0- — D10
21 HDMI_D1+ — C9
21 HDMI_D1- — D9
21 HDMI_D2+ — C8
21 HDMI_D2- — D8
21 HDMI_CLK+ — D11
21 HDMI_CLK- — C11

ABE_McBSP2_CLKX/McSPI2_CLK/ABE_MCASP_AHCLKX/GPIO_110/USBB2_MM_RXDM/SAFE_MODE
ABE_McBSP2_DR/McSPI2_SOMI/ABE_MCASP_AXR/GPIO_111/USBB2_MM_RXDP/SAFE_MODE
ABE_McBSP2_DX/McSPI2_SIMO/ABE_MCASP_AMUTE/GPIO_112/USBB2_MM_RXRCV/SAFE_MODE
ABE_McBSP2_FSX/McSPI2_CS0/ABE_MCASP_AFSX/GPIO_113/USBB2_MM_TXEN/SAFE_MODE

ABE_McBSP1_CLKX/ABE_SLIMBUS1_CLOCK/GPIO_114/SAFE_MODE
ABE_McBSP1_DR/ABE_SLIMBUS1_DATA/GPIO_115/SAFE_MODE
ABE_McBSP1_DX/SDMMC3_DAT2/ABE_MCASP_ACLKX/GPIO_116/SAFE_MODE
ABE_McBSP1_FSX/SDMMC3_DAT3/ABE_MCASP_AMUTEIN/GPIO_117/SAFE_MODE

ABE_PDM_UL_DATA/ABE_McBSP3_DR/SAFE_MODE
ABE_PDM_DL_DATA/ABE_McBSP3_DX/SAFE_MODE
ABE_PDM_FRAME/ABE_McBSP3_CLKX/SAFE_MODE
ABE_PDM_LB_CLK/ABE_McBSP3_FSX/SAFE_MODE
ABE_CLKS/GPIO_118/SAFE_MODE

ABE_DMIC_CLK1/GPIO_119/USBB2_MM_TXSE0/SAFE_MODE
ABE_DMIC_DIN1/GPIO_120/USBB2_MM_TXDAT/SAFE_MODE
ABE_DMIC_DIN2/SLIMBUS2_CLOCK/GPIO_121/SAFE_MODE
ABE_DMIC_DIN3/SLIMBUS2_DATA/ABE_DMIC_CLK2/GPIO_122/SAFE_MODE

USBB1_ULPITLL_CLK/HSI1_CAWAKE/GPIO_84/USBB1_ULPIPHY_CLK/ATTILA_HW_DBG20/SAFE_MODE
USBB1_ULPITLL_STP/HSI1_CADATA/McBSP4_CLKR/GPIO_85/USBB1_ULPIPHY_STP/USBB1_MM_RXDP/ATTILA_HW_DBG21/SAFE_MODE
USBB1_ULPITLL_DIR/HSI1_CAFLAG/McBSP4_FSR/GPIO_86/USBB1_ULPIPHY_DIR/ATTILA_HW_DBG22/SAFE_MODE
USBB1_ULPITLL_NXT/HSI1_ACREADY/McBSP4_FSX/GPIO_87/USBB1_ULPIPHY_NXT/USBB1_MM_RXDM/ATTILA_HW_DBG23/SAFE_MODE
USBB1_ULPITLL_DAT0/HSI1_ACWAKE/McBSP4_CLKX/GPIO_88/USBB1_ULPIPHY_DAT0/USBB1_MM_RXRCV/ATTILA_HW_DBG24/SAFE_MODE
USBB1_ULPITLL_DAT1/HSI1_ACDATA/McBSP4_DX/GPIO_89/USBB1_ULPIPHY_DAT1/USBB1_MM_TXSE0/ATTILA_HW_DBG25/SAFE_MODE
USBB1_ULPITLL_DAT2/HSI1_ACFLAG/McBSP4_DR/GPIO_90/USBB1_ULPIPHY_DAT2/USBB1_MM_TXDAT/ATTILA_HW_DBG26/SAFE_MODE
USBB1_ULPITLL_DAT3/HSI1_CAREADY/GPIO_91/USBB1_ULPIPHY_DAT3/USBB1_MM_TXEN/ATTILA_HW_DBG27/SAFE_MODE
USBB1_ULPITLL_DAT4/DMTIMER8_PWM_EVT/ABE_McBSP3_DR/GPIO_92/USBB1_ULPIPHY_DAT4/ATTILA_HW_DBG28/SAFE_MODE
USBB1_ULPITLL_DAT5/DMTIMER9_PWM_EVT/ABE_McBSP3_DX/GPIO_93/USBB1_ULPIPHY_DAT5/ATTILA_HW_DBG29/SAFE_MODE
USBB1_ULPITLL_DAT6/DMTIMER10_PWM_EVT/ABE_McBSP3_CLKX/GPIO_94/USBB1_ULPIPHY_DAT6/ABE_DMIC_DIN3/ATTILA_HW_DBG30/SAFE_MODE
USBB1_ULPITLL_DAT7/DMTIMER11_PWM_EVT/ABE_McBSP3_FSX/GPIO_95/USBB1_ULPIPHY_DAT7/ABE_DMIC_CLK3/ATTILA_HW_DBG31/SAFE_MODE
USBB1_HSIC_DATA/GPIO_96/SAFE_MODE
USBB1_HSIC_STROBE/GPIO_97/SAFE_MODE

SDMMC1_CLK/DPM_EMU19/GPIO_100/SAFE_MODE
SDMMC1_CMD/UART1_RX/GPIO_101/SAFE_MODE
SDMMC1_DAT0/DPM_EMU18/GPIO_102/SAFE_MODE
SDMMC1_DAT1/DPM_EMU17/GPIO_103/SAFE_MODE
SDMMC1_DAT2/DPM_EMU16/GPIO_104/JTAG_TMS_TMSC/SAFE_MODE
SDMMC1_DAT3/DPM_EMU15/GPIO_105/JTAG_TCK/SAFE_MODE
SDMMC1_DAT4/GPIO_106/SAFE_MODE
SDMMC1_DAT5/GPIO_107/SAFE_MODE
SDMMC1_DAT6/GPIO_108/SAFE_MODE
SDMMC1_DAT7/GPIO_109/SAFE_MODE

VDD_SDMMC1 Power Domain

UART2_CTS/SDMMC3_CLK/GPIO_123/SAFE_MODE
UART2_RTS/SDMMC3_CMD/GPIO_124/SAFE_MODE
UART2_RX/SDMMC3_DAT0/GPIO_125/SAFE_MODE
UART2_TX/SDMMC3_DAT1/GPIO_126/SAFE_MODE

McSPI1_CLK/GPIO_134/SAFE_MODE
McSPI1_SOMI/GPIO_135/SAFE_MODE
McSPI1_SIMO/GPIO_136/SAFE_MODE
McSPI1_CS0/GPIO_137/SAFE_MODE
McSPI1_CS1/UART1_RX/GPIO_138/SAFE_MODE
McSPI1_CS2/UART1_CTS/SLIMBUS2_CLOCK/GPIO_139/SAFE_MODE
McSPI1_CS3/UART1_RTS/SLIMBUS2_DATA/GPIO_140/SAFE_MODE
UART3_CTS_RCTX/UART1_TX/GPIO_141/SAFE_MODE
UART3_RTS_SD/GPIO_142/SAFE_MODE
UART3_RX_IRRX/DMTIMER8_PWM_EVT/GPIO_143/SAFE_MODE
UART3_TX_IRTX/DMTIMER9_PWM_EVT/GPIO_144/SAFE_MODE

McSPI4_CLK/SDMMC4_CLK/GPIO_151/SAFE_MODE
McSPI4_SIMO/SDMMC4_CMD/GPIO_152/SAFE_MODE
McSPI4_SOMI/SDMMC4_DAT0/GPIO_153/SAFE_MODE
McSPI4_CS0/SDMMC4_DAT3/GPIO_154/SAFE_MODE
UART4_RX/SDMMC4_DAT2/GPIO_155/SAFE_MODE
UART4_TX/SDMMC4_DAT1/GPIO_156/SAFE_MODE

SIM_IO/GPIO_WK0/ATTILA_HW_DBG1/SAFE_MODE
SIM_CLK/GPIO_WK1/ATTILA_HW_DBG2/SAFE_MODE
SIM_RESET/GPIO_WK2/ATTILA_HW_DBG3/SAFE_MODE
SIM_CD/GPIO_WK3/ATTILA_HW_DBG4/SAFE_MODE
SIM_PWR_CTRL/GPIO_WK4/ATTILA_HW_DBG5/SAFE_MODE
USBC1_ICUSB_DP/GPIO_98/SAFE_MODE
USBC1_ICUSB_DM/GPIO_99/SAFE_MODE

VDD_USIM Power Domain

HDMI_HPD/GPIO_63/SAFE_MODE
HDMI_CEC/GPIO_64/SAFE_MODE
HDMI_DDC_SCL/GPIO_65/SAFE_MODE
HDMI_DDC_SDA/GPIO_66/SAFE_MODE
HDMI_DATA0X
HDMI_DATA0Y
HDMI_DATA1X
HDMI_DATA1Y
HDMI_DATA2X
HDMI_DATA2Y
HDMI_CLOCKX
HDMI_CLOCKY

CSI22_DY2/CAM2_WEN — M27
CSI22_DX2/CAM2_FID — N27

SDMMC5_CLK/MCSPI2_CLK/USBC1_ICUSB_DP/GPIO_145/SAFE_MODE
SDMMC5_CMD/MCSPI2_SIMO/USBC1_ICUSB_DM/GPIO_146/SAFE_MODE
SDMMC5_DAT0/MCSPI2_SOMI/USBC1_ICUSB_RCV/GPIO_147/SAFE_MODE
SDMMC5_DAT1/USBC1_ICUSB_TXEN/GPIO_148/SAFE_MODE
SDMMC5_DAT2/MCSPI2_CS1/GPIO_149/SAFE_MODE
SDMMC5_DAT3/MCSPI2_CS0/GPIO_150/SAFE_MODE

Input Only
VDDA_CSI21 Power Domain
VDDA_CSI22 Power Domain

CSI21_DX0/GPI_67/SAFE_MODE — R26
CSI21_DY0/GPI_68/SAFE_MODE — R25
CSI21_DX1/GPI_69/SAFE_MODE — T26
CSI21_DY1/GPI_70/SAFE_MODE — T25
CSI21_DX2/GPI_71/SAFE_MODE — U26
CSI21_DY2/GPI_72/SAFE_MODE — U25
CSI21_DX3/GPI_73/SAFE_MODE — V26
CSI21_DY3/GPI_74/SAFE_MODE — V25
CSI21_DX4/GPI_75/SAFE_MODE — W26
CSI21_DY4/GPI_76/SAFE_MODE — W25

CSI22_DX0/GPI_77/SAFE_MODE — M26
CSI22_DY0/GPI_78/SAFE_MODE — M25
CSI22_DX1/GPI_79/SAFE_MODE — N26
CSI22_DY1/GPI_80/SAFE_MODE — N25
CAM_SHUTTER/GPIO_81/SAFE_MODE — T27
CAM_STROBE/GPIO_82/SAFE_MODE — U27
CAM_GLOBALRESET/GPIO_83/SAFE_MODE — V27

CVIDEO_TVOUT — B7
CVIDEO_VFB — C7
CVIDEO_RSET — D7

DSI1_DX0 — P3
DSI1_DY0 — P4
DSI1_DX1 — N3
DSI1_DY1 — N4
DSI1_DX2 — M3
DSI1_DY2 — M4
DSI1_DX3 — L3
DSI1_DY3 — L4
DSI1_DX4 — K3
DSI1_DY4 — K4

DSI2_DX0 — T3
DSI2_DY0 — T4
DSI2_DX1 — U3
DSI2_DY1 — U4
DSI2_DX2 — V3
DSI2_DY2 — V4

GPMC_AD0/SDMMC2_DAT0
GPMC_AD1/SDMMC2_DAT1
GPMC_AD2/SDMMC2_DAT2
GPMC_AD3/SDMMC2_DAT3
GPMC_AD4/SDMMC2_DAT4/SDMMC2_DIR_DAT0
GPMC_AD5/SDMMC2_DAT5/SDMMC2_DIR_DAT1
GPMC_AD6/SDMMC2_DAT6/SDMMC2_DIR_CMD
GPMC_AD7/SDMMC2_DAT7/SDMMC2_CLK_FDBK
GPMC_AD8/KPD_ROW0/C2C_DATA15/GPIO_32
GPMC_AD9/KPD_ROW1/C2C_DATA14/GPIO_33
GPMC_AD10/KPD_ROW2/C2C_DATA13/GPIO_34
GPMC_AD11/KPD_ROW3/C2C_DATA12/GPIO_35
GPMC_AD12/KPD_COL0/C2C_DATA11/GPIO_36
GPMC_AD13/KPD_COL1/C2C_DATA10/GPIO_37
GPMC_AD14/KPD_COL2/C2C_DATA9/GPIO38
GPMC_AD15/KPD_COL3/C2C_DATA8/GPIO39

GPMC_A16/KPD_ROW4/C2C_DATAIN0/GPIO40/VENC_656_DATA0
GPMC_A17/KPD_ROW5/C2C_DATAIN1/GPIO_41/VENC_656_DATA1/SAFE_MODE
GPMC_A18/KPD_ROW6/C2C_DATAIN2/GPIO_42/VENC_656_DATA2/SAFE_MODE
GPMC_A19/KPD_ROW7/C2C_DATAIN3/GPIO_43/VENC_656_DATA3/SAFE_MODE
GPMC_A20/KPD_COL4/C2C_DATAIN4/GPIO_44/VENC_656_DATA4/SAFE_MODE
GPMC_A21/KPD_COL5/C2C_DATAIN5/GPIO_45/VENC_656_DATA5/SAFE_MODE
GPMC_A22/KPD_COL6/C2C_DATAIN6/GPIO_46/VENC_656_DATA6/SAFE_MODE
GPMC_A23/KPD_COL7/C2C_DATAIN7/GPIO_47/VENC_656_DATA7/SAFE_MODE
GPMC_A24/C2C_CLKOUT0/GPIO_48/SAFE_MODE
GPMC_A25/C2C_CLKOUT1/GPIO_49/SAFE_MODE

GPMC_nCS0/GPIO_50/SYS_NDMAREQ0
GPMC_nCS1/C2C_DATAOUT6/GPIO_51/SAFE_MODE
GPMC_nCS2/C2C_DATAOUT7/GPIO_52/SAFE_MODE
GPMC_nCS3/GPMC_DIR/C2C_DATAOUT4/GPIO_53/SAFE_MODE
GPMC_nWP/DSI1_TE0/GPIO_54/SYS_NDMAREQ1
GPMC_CLK/GPIO_55/SYS_NDMAREQ2
GPMC_nADV_ALE//DSI1_TE1/GPIO_56/SYS_NDMAREQ3
GPMC_nOE/SDMMC2_CLK
GPMC_nWE/SDMMC2_CMD
GPMC_NBE0_CLE/DSI2_TE0/GPIO_59
GPMC_nBE1/C2C_DATAOUT5/GPIO_60/SAFE_MODE
GPMC_WAIT0/DSI2_TE1/GPIO_61
GPMC_WAIT1/C2C_DATAOUT2/GPIO_62/SAFE_MODE

NC for OMAP 4428 and OMAP 4430

WIFI SDMMC5
R0201
AE5 MMC5_CLK R1101 1 — 2 33R — WIFI_SDIO_CLK — 19
AF5 MMC5_CMD R1118 1 — 2 33R — WIFI_SDIO_CMD — 19
AE4 MMC5_DAT0 R1119 1 — 2 33R — WIFI_SDIO_DAT0 — 19
AF4 MMC5_DAT1 R1120 1 — 2 33R — WIFI_SDIO_DAT1 — 19
AG3 MMC5_DAT2 R1121 1 — 2 33R — WIFI_SDIO_DAT2 — 19
AF3 MMC5_DAT3 R1122 1 — 2 33R — WIFI_SDIO_DAT3 — 19

Main Camera
R26 — MAIN_CAM_CLK+ — 17
R25 — MAIN_CAM_CLK- — 17
T26 — MAIN_CAM_DAT0+ — 17
T25 — MAIN_CAM_DAT0- — 17

Sub Camera
M26 — SUB_CAM_CLK+ — 17
M25 — SUB_CAM_CLK- — 17
N26 — SUB_CAM_DAT0+ — 17
N25 — SUB_CAM_DAT0- — 17
T27 — SUB_CAM_nSTANDBY — 17
U27 — CAM_STROBE — 17
V27 — CAM_nRESET — 17

eMMC
R0201
C12 MMC2_DAT0 R11231 — 2 33R — eMMC_AD0
D12 MMC2_DAT1 R11241 — 2 33R — eMMC_AD1
C13 MMC2_DAT2 R11251 — 2 33R — eMMC_AD2
D13 MMC2_DAT3 R11261 — 2 33R — eMMC_AD3
C15 MMC2_DAT4 R11271 — 2 33R — eMMC_AD4
D15 MMC2_DAT5 R11281 — 2 33R — eMMC_AD5
A16 MMC2_DAT6 R11291 — 2 33R — eMMC_AD6
B16 MMC2_DAT7 R11301 — 2 33R — eMMC_AD7
eMMC_AD[0:7] — 24

C16 — TP_RST — 17
D16 — M_RDY — 2
C17 — BAT_CHRG_GDN — 23
D17 JIG_DET 1 — TP1103 TP-1.5
C18 — PS_INT — 16
D18 — VTP_3V3_EN — 23
C19 — MAIN_CAM_nSTANDBY — 17
D19 — MAIN_CAM_SHUTDOWN — 17

B17 — M_USBB1_RST — 21
A18 — HDMI_LS_OE — 21
B18 — CAM_2V8_EN — 23
A19 — VLCM_3V3_EN — 23
B19
B20 — GS_INT1 — 16
A21 — G-SENSOR_EN — 18
B21 — MODEM_USB_EN — 2
C20 — MODEM_ALIVE — 2
D20 — USIF_SW — 2

B25 — G-SENSOR_INT1 — 16
C21 — G-SENSOR_INT2 — 16
D21 — TP_INT — 17
C22 — WLAN_IRQ# — 19
C25 — WL_EN — 19
B22 — BT_EN — 19
D25 — RESET_MODEM — 2
B11 — eMMC_CLK — 24
B12 — eMMC_CMD — 24
C23 — VBAT_MODEM_EN — 2,23
D22 — HDMI_CT_CP_HPD — 21
B26 — eMMC_RST — 24
B23 — GS_INT2 — 16

U1101_POP 111-1002908
EDB8164B3PF-8D-F
4Gb POP MEMORY (MOUNT ON TOP OF OMAP4430)

OMAP4460 ES2.0, EMU,
12x12mm, FCPOP1
(547 Bottom Balls, 0.4mm Pitch, 216 Top Pads)

TEXAS INSTRUMENTS

InnoComm Mobile Technology Corp.	
Project Name : Oracle 6101	Title : OMAP 4 Tablet PC (WiFi Version)
Size : A3	Document Number : OMAP4428_MEM
Rev : R006	
Date: Thursday, May 31, 2012	Sheet : 11 of 30

OMAP / Host Signaling I/Fs

Component ROOM = OMAP

Remove pull-up resistors for I2C2
~ I2C4 and AUD_PWRON

U1101B
OMAP4428 111-1003315

OMAP4460 ES2.0, EMU, 12X12MM, FCPOP1
(547 BOTTOM BALLS AT 0.4MM PITCH, 216 TOP BALLS)

Hardware Version [S3, S2 , S1] = 101

OMAP 4460 Boot Priority Cofiguration				
SYS_BOOT[5:0]	1st	2nd	3rd	4th
0b010110	USB	UART	MMC1	MMC2(1)
0b110110	MMC2(1)	USB	UART	MMC1

InnoComm Confidential. Release to Matsunichi.

InnoComm Mobile Technology Corp.	
Project Name : Delphi 6107	Title : OMAP 4 Tablet PC (WiFi Version)
Size : A2	Document Number : OMAP4460_PERI
Rev : R007	
Date: Thursday, May 31, 2012	Sheet : 12 of 30

InnoComm Confidential. Release to Mitsunichi.

Component ROOM = OMAP

OMAP / Host Power

TEXAS INSTRUMENTS

OMAP4460 ES2.0, EMU, 12X12MM, FCPOP1
(547 BOTTOM BALLS AT 0.4MM PITCH, 216 TOP BALLS)

U1101C
OMAP4428
111-1003315

V_GS_1V8 · V_GS_2V8 · R1309 NM (10K) R0201 · U1301 TMP105YZC · C1342 100NF C0201 · C1 · 12,16 I2C4_SCL · 12,16 I2C4_SDA · TEMP_SCL · TEMP_SDA · 12 SYSBOOT2 · TEMP_IRQ · SCL SDA ALERT A0 · V+ · GND · A1 · A2 · B1 · B2 · C2 · 100/400KHz · 2.6V ~ 3.3V · 15 MPU_TEMP · R1301 NTC_47K_5% R0402 muRata NCP15WB473F03RC

V1V8_OMAP_VIO · R1302 0R R0805 · VIO_1V8
V1V29_OMAP_LPDDR2 · R1303 0R R0805 · VPMIC_VMEM

VCORE3_OMAP_CORE · "Close to OMAP4" · C1330 1UF C0402 · C1328 100NF C0201 · C1329 100NF C0201 · C1331 100NF C0201 · C1376 100NF C0201 · C1377 100NF C0201 · C1378 100NF C0201

VCORE1_OMAP_MPU · "Close to OMAP4" · C1333 100NF C0201 · C1334 100NF C0201 · C1335 100NF C0201 · C1336 100NF C0201 · C1370 100NF C0201 · C1332 470NF C0402 · C1368 1UF C0402 · C1369 1UF C0402 · C1371 1UF C0402 · C1372 4.7UF C0603

VCORE2_OMAP_IVAUD · "Close to OMAP4" · C1337 100NF C0201 · C1338 100NF C0201 · C1339 100NF C0201 · C1340 100NF C0201 · C1373 100NF C0201 · C1374 1UF C0402

V1V8_OMAP_VIO · C1345 100NF C0201 · C1341 220NF C0201 · C1344 100NF C0201

VCXIO_1V8 · "Close to OMAP4" · C1346 220NF C0201 · C1347 220NF C0201 · C1382 220NF C0201 · C1383 220NF C0201

VPMIC_VDAC · VCXIO_1V8 · "Close to OMAP4" · C1348 470NF C0402 · C1349 100NF C0201 · C1350 100NF C0201 · C1351 100NF C0201

V1V8_OMAP_VIO · VPMIC_VMEM · "Close to OMAP4" · C1352 220NF C0201 · C1353 100NF C0201 · C1354 220NF C0201 · C1355 220NF C0201

VCXIO_1V8 · VPMIC_VUSB_3V3 · C1356 220NF C0201 · C1357 220NF C0201

V1V8_OMAP_VIO · C1359 470NF C0402 · C1360 100NF C0201 · C1358 100NF C0201 · C1361 100NF C0201

VPMIC_VMEM · C1384 470NF C0402 · C1363 470NF C0402 · C1364 100NF C0201 · C1362 100NF C0201 · C1365 100NF C0201

V1V29_OMAP_LPDDR2 · C1367 100NF C0201 · C1366 100NF C0201

R1306 1 R0201 2 240R LPDDR21_ZQ
R1307 1 R0201 2 240R LPDDR22_ZQ

VDDQ_LPDDR2 · V1V29_OMAP_LPDDR2 · C1304 100NF C0201 · C1303 100NF C0201 · C1302 100NF C0201 · C1301 100NF C0201 · C1379 100NF C0201 · C1375 100NF C0201 · C1380 470NF C0402 · C1381 470NF C0402

VDDA_LPDDR2 · V1V29_OMAP_LPDDR2 · C1306 470NF C0402 · C1305 100NF C0201

VDDS_DV_BANK0 · VDDS_DV_BANK1 · VDDS_DV_BANK2 · VDDS_DV_BANK2 · VDDS_DV_BANK3 · VDDS_DV_BANK4 · VDDS_DV_BANK5 · VDDS_DV_BANK6 · VDDS_DV_BANK7 · VDDS_DV_C2C · VDDS_DV_C2C · VDDS_DV_C2C · V1V8_OMAP_VIO · C1307 100NF C0201 · C1308 100NF C0201 · C1309 100NF C0201 · C1310 100NF C0201 · C1311 100NF C0201 · C1312 100NF C0201 · R1305 0R R0201

VDDS_DV_GPMC · VDDS_DV_FREF · VDDS_SDMMC1 · VDDS_SDMMC1 · VDD_MMC1 · C1313 100NF C0201 · VPMIC_VMEM · C1314 100NF C0201 · VDDS_SIM · C1315 100NF C0201

VDDS_DV_SDMMC2 · VDDS_DV_SDMMC2 · VDDS_1P2 · VDDS_DV_CAM · VDDS_SIM · VCORE3_OMAP_CORE · "Close to OMAP4"

VDDA_DLL0_LPDDR21 · VDDA_DLL1_LPDDR21 · VDDA_DLL0_LPDDR22 · VDDA_DLL1_LPDDR22 · C1317 100NF C0201 · C1318 100NF C0201 · C1316 100NF C0201

CAP_VBB_LDO_IVA_AUDIO · CAP_VDD_LDO_SRAM_IVA_AUDIO · CAP_VBB_LDO_MPU · CAP_VDD_LDO_SRAM_MPU · CAP_VDD_LDO_SRAM_CORE · CAP_VDD_LDO_EMU_WKUP · OMAP_CAP_PWR1 · OMAP_CAP_PWR2 · OMAP_CAP_PWR3 · OMAP_CAP_PWR4 · OMAP_CAP_PWR5 · OMAP_CAP_PWR6 · "Close to OMAP4" · C1324 NM C0402 · C1323 1UF C0402 · C1322 1UF C0402 · C1321 1UF C0402 · C1320 1UF C0402 · C1319 1UF C0402

PBIAS_SDMMC1 · PBIAS_SIM · V1V8_OMAP_VIO · C1325 100NF C0201 · C1326 100NF C0201

VDDA_BDGP_VBB

VPP_CUST · VPP_STD · VPP_CUST · R1304 R0201 NM · VPMIC_OMAP_VPP_CUST

VSENSE · AG28 OMAP4430_VSENSE · TP1301 TP-0.5 · IFORCE · AH27 OMAP4430_IFORCE · TP1302 TP-0.5 · C1327 NM C0201

LPDDR21_NCS0 · C2C_VREF · H15 C2C_VREF · TP1303 TP-0.5

RSVD1 · RSVD2 · RSVD3 · RSVD4 · RSVD5 · RSVD6 · RSVD7 · RSVD8 · RSVD9 · RSVD10 · RSVD11 · RSVD14 · NC1 · NC2 · NC3

VSS · VSSA_USBA0OTG · VSSA_USBA0OTG_3P3V · VSSA_UNI · VSSA_HDMI_VDAC · VSSA_DSI · VSSA_DSI · VSSA_CSI2

OMAP4 Audio Interfaces

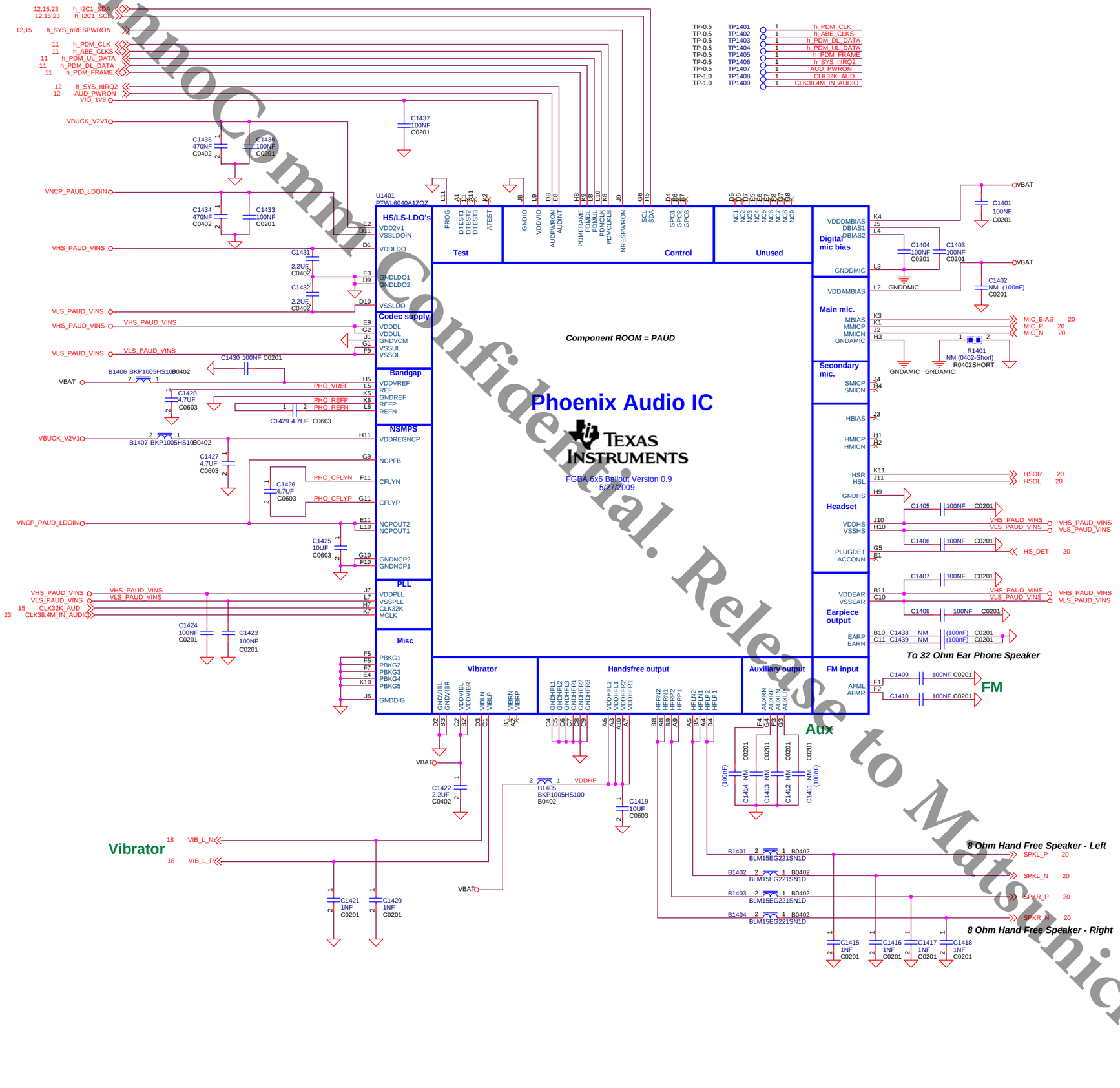

InnoComm Confidential. Release to Matsunichi.

InnoComm Mobile Technology Corp.	
Project Name : Delphi 6107	Title : OMAP 4 Tablet PC (WiFi Version)
Size : A2	Document Number : TWL6040 AUDIO
Rev : R007	
Date: Thursday, May 24, 2012	Sheet : 14 of 30

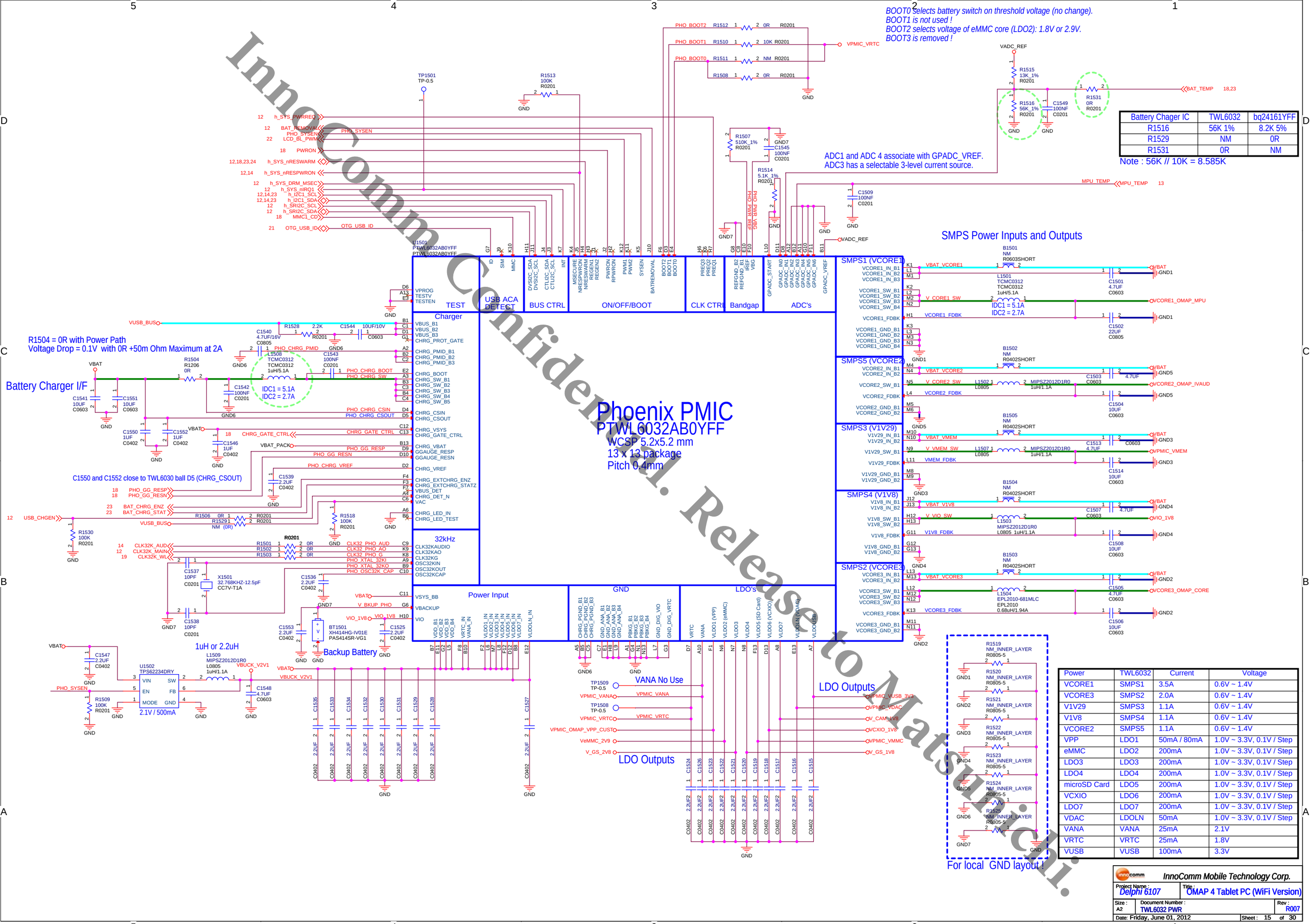

Battery Chager IC	TWL6032	bq24161YFF
R1516	56K 1%	8.2K 5%
R1529	NM	0R
R1531	0R	NM

Note : 56K // 10K = 8.585K

Power	TWL6032	Current	Voltage
VCORE1	SMPS1	3.5A	0.6V ~ 1.4V
VCORE3	SMPS2	2.0A	0.6V ~ 1.4V
V1V29	SMPS3	1.1A	0.6V ~ 1.4V
V1V8	SMPS4	1.1A	0.6V ~ 1.4V
VCORE2	SMPS5	1.1A	0.6V ~ 1.4V
VPP	LDO1	50mA / 80mA	1.0V ~ 3.3V, 0.1V / Step
eMMC	LDO2	200mA	1.0V ~ 3.3V, 0.1V / Step
LDO3	LDO3	200mA	1.0V ~ 3.3V, 0.1V / Step
LDO4	LDO4	200mA	1.0V ~ 3.3V, 0.1V / Step
microSD Card	LDO5	200mA	1.0V ~ 3.3V, 0.1V / Step
VCXIO	LDO6	200mA	1.0V ~ 3.3V, 0.1V / Step
LDO7	LDO7	200mA	1.0V ~ 3.3V, 0.1V / Step
VDAC	LDOLN	50mA	1.0V ~ 3.3V, 0.1V / Step
VANA	VANA	25mA	2.1V
VRTC	VRTC	25mA	1.8V
VUSB	VUSB	100mA	3.3V

InnoComm Mobile Technology Corp.

Project Name : Delphi 6107

Title : OMAP 4 Tablet PC (WiFi Version)

Size : A2

Document Number : TWL6032 PWR

Rev : R007

Date: Friday, June 01, 2012

Sheet : 15 of 30

InnoComm Confidential. Release to Matsunichi.

InnoComm Confidential

Ambient Light Sensor

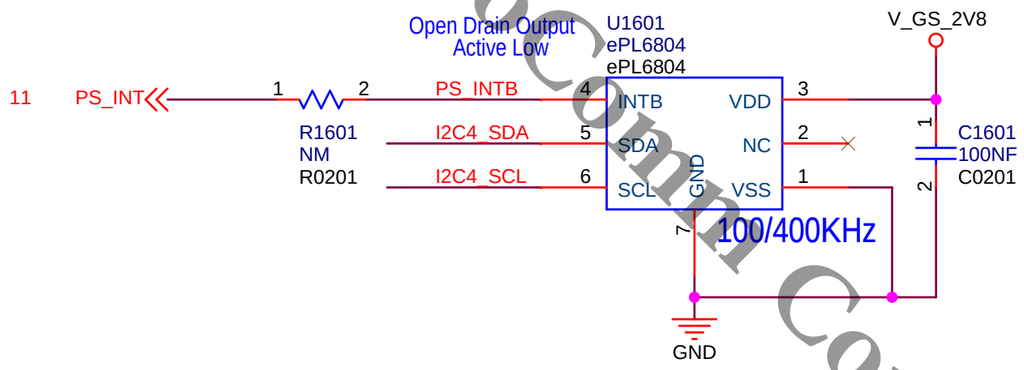

E-Compass G-sensor

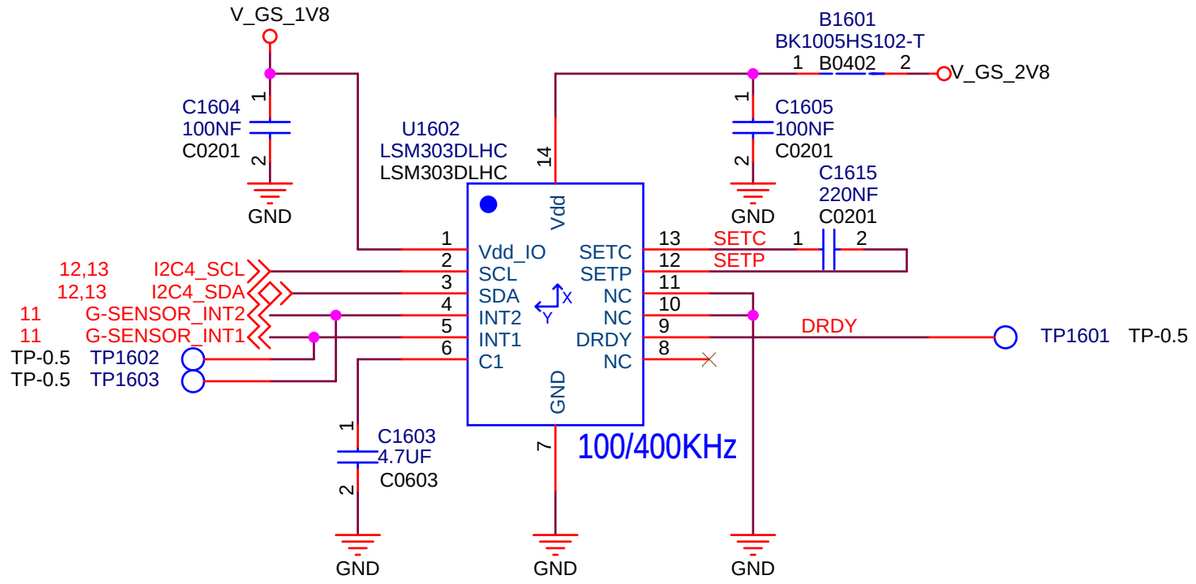

Gyroscope Sensor

Pre-Release to Matsunichi

innocomm InnoComm Mobile Technology Corp.		
Project Name : Delphi 6107	Title : OMAP 4 Tablet PC (WiFi Version)	
Size : A4	Document Number : Sensors	Rev : R007
Date: Thursday, May 24, 2012	Sheet : 16 of 30	

InnoComm Confidential. Release to Matsunichi

2M Camera

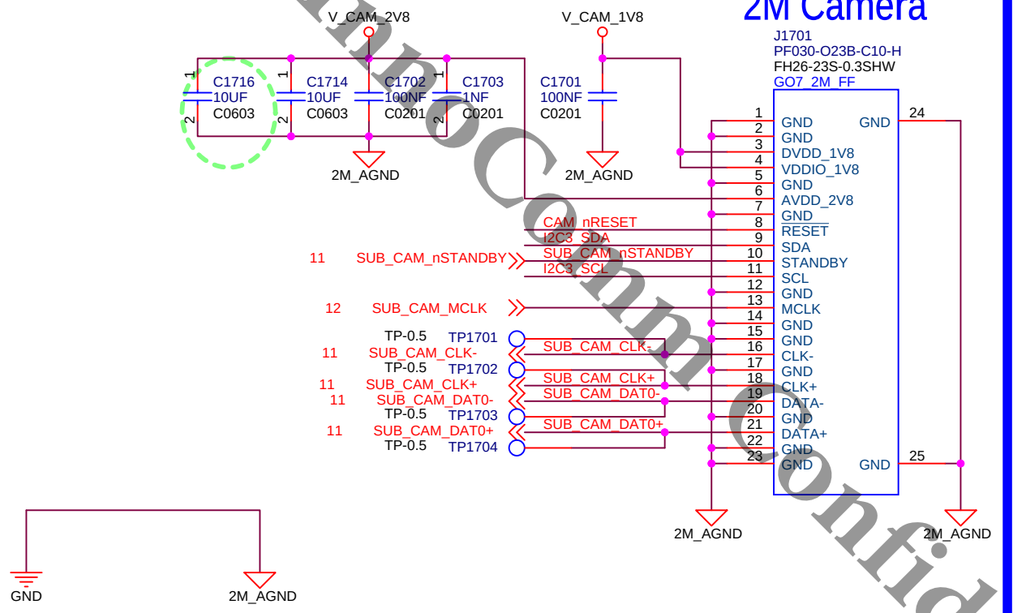

5M Camera

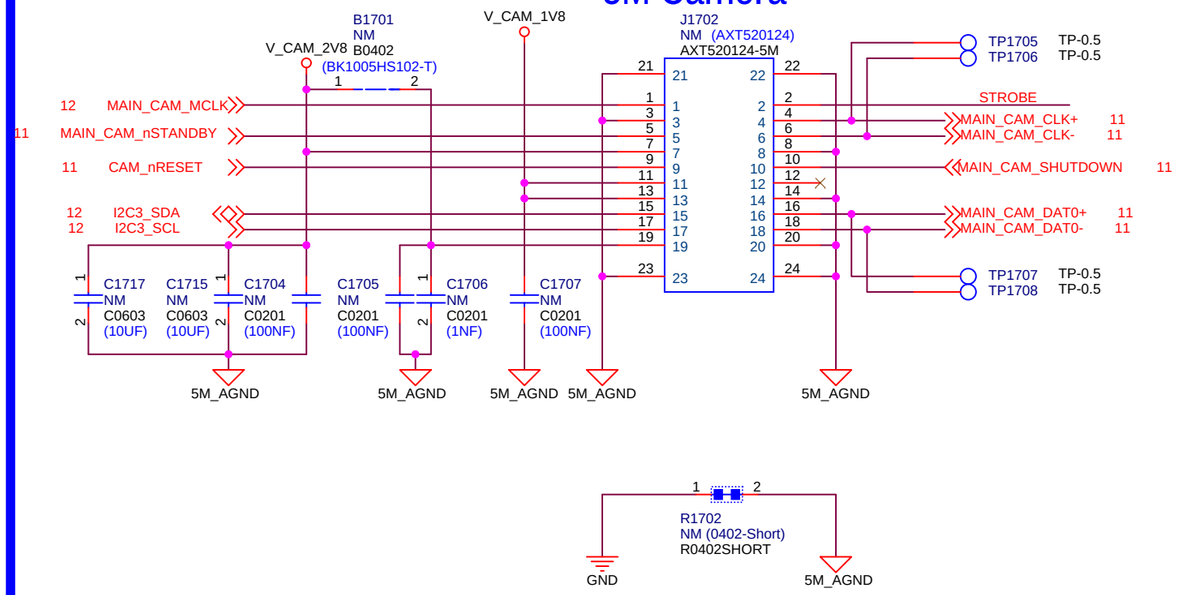

Capacitive Touch Pad

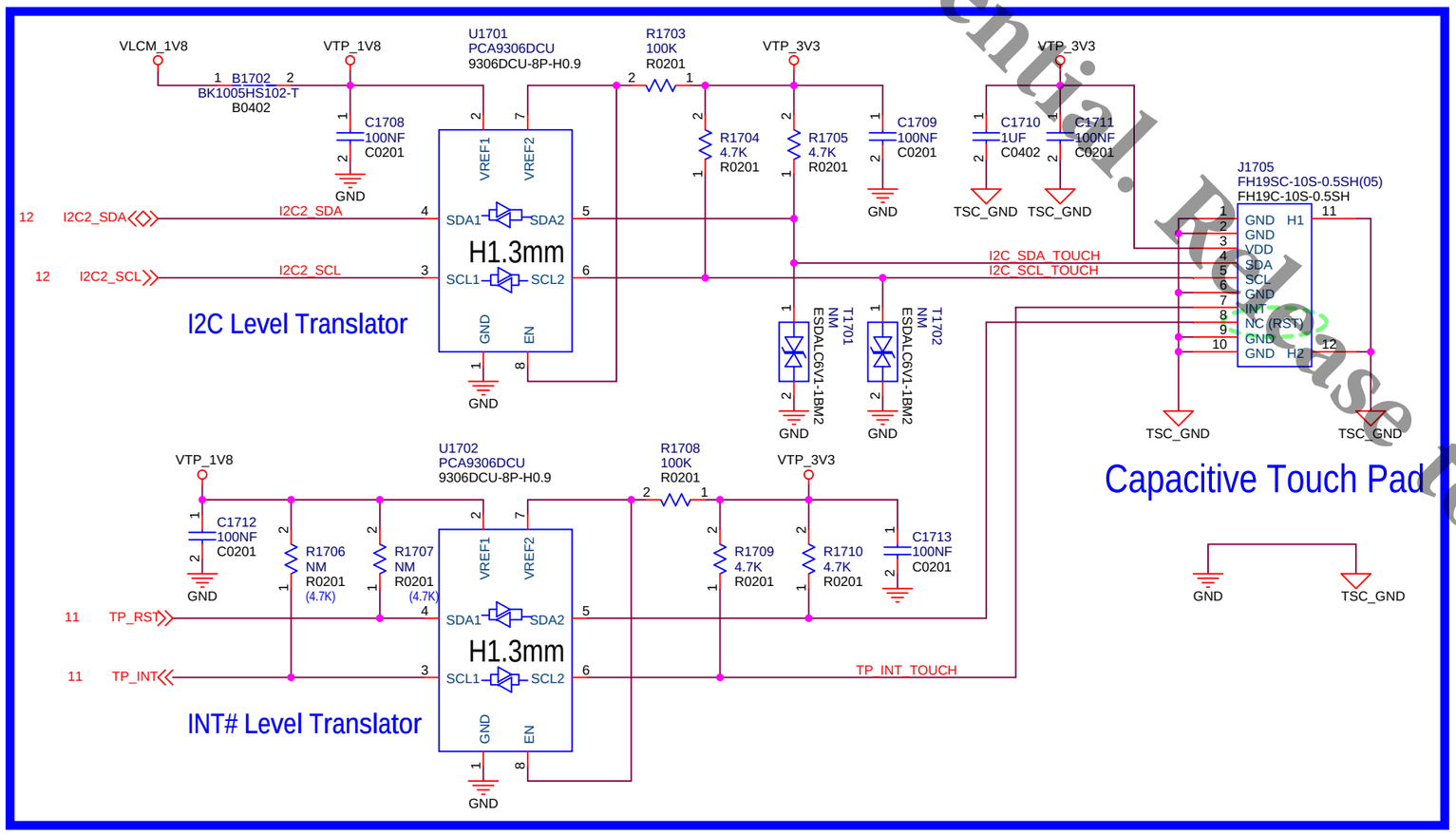

Photo Flash

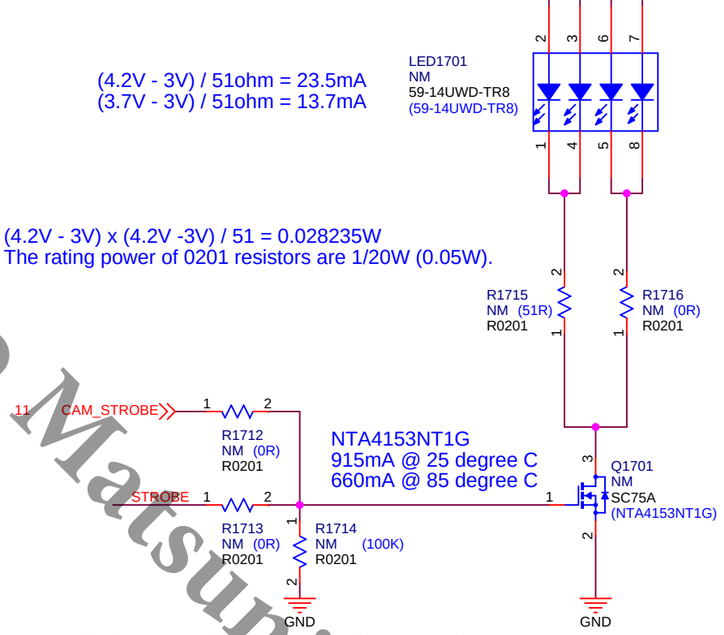

innocomm	InnoComm Mobile Technology Corp.	
Project Name : Delphi 6107	Title : OMAP 4 Tablet PC (WiFi Version)	
Size : A3	Document Number : Camera / Touch Pad	Rev : R007
Date: Thursday, May 31, 2012	Sheet : 17 of 30	

Micro SD Card Slot

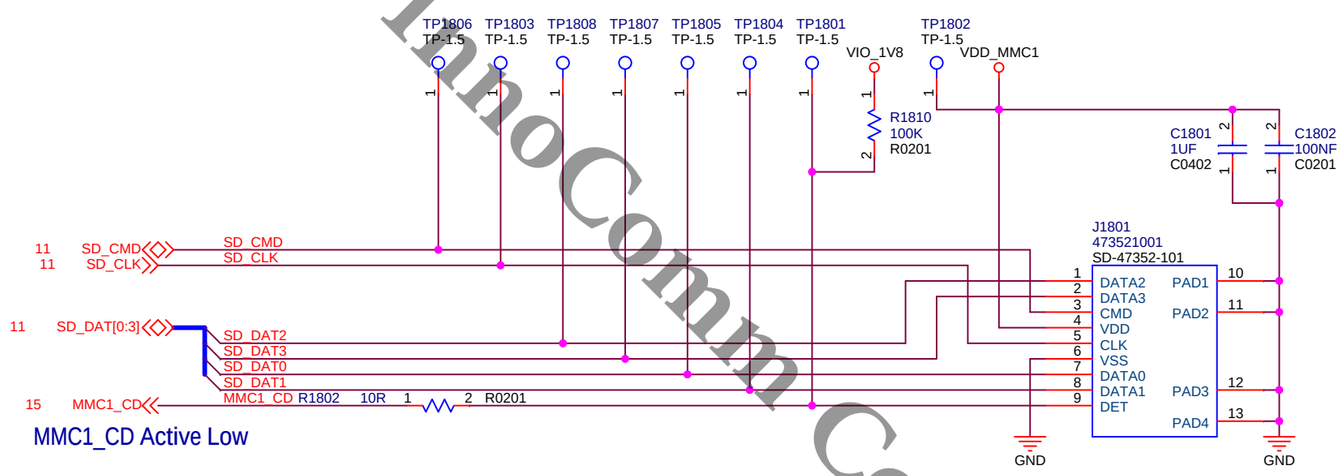

MMC1_CD Active Low

SIM Card

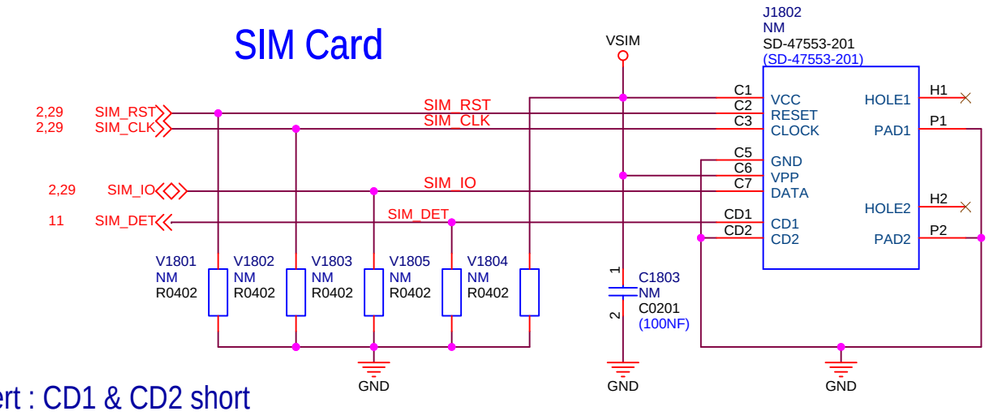

Insert : CD1 & CD2 short
SIM_DET Active Low

Battery Connector

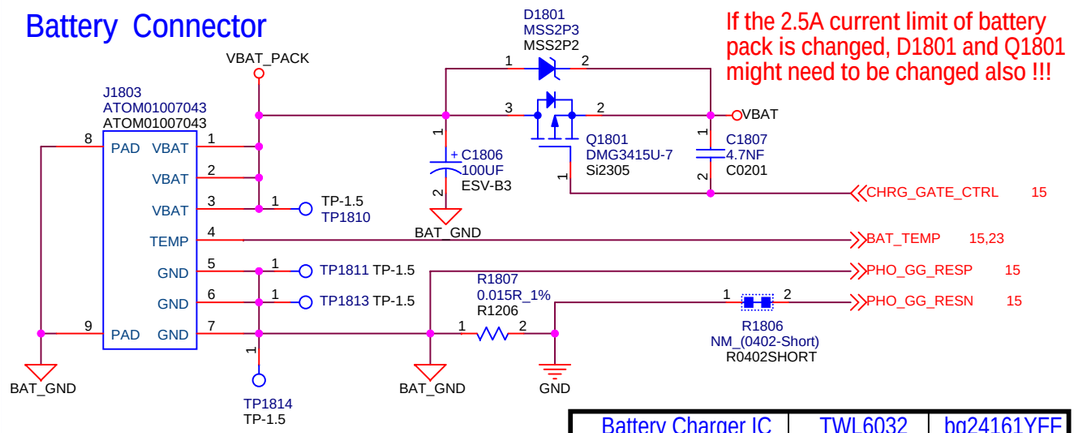

If the 2.5A current limit of battery pack is changed, D1801 and Q1801 might need to be changed also !!!

Battery Charger IC	TWL6032	bq24161YFF
C1806	100UF	100UF
C1807	4.7NF	NM
Q1801	DMG3415U-7	NM

Charging Current Limit = 1.5A, R1807 = 0.020 Ohm
Charging Current Limit = 2A, R1807 = 0.015 Ohm

Vibrator

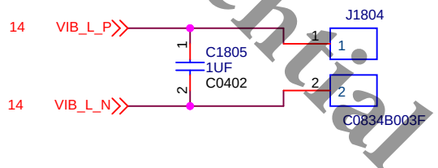

Power-On Key

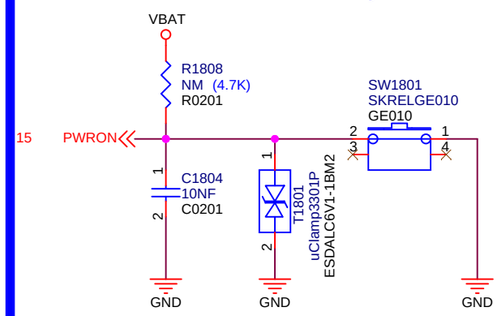

Reset Key

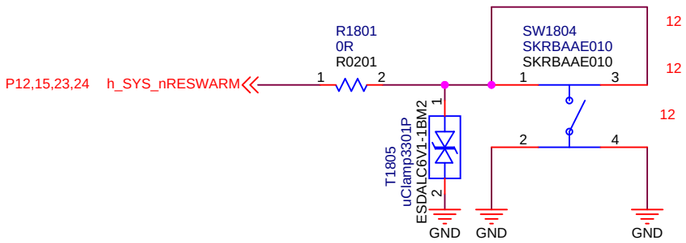

Down Up

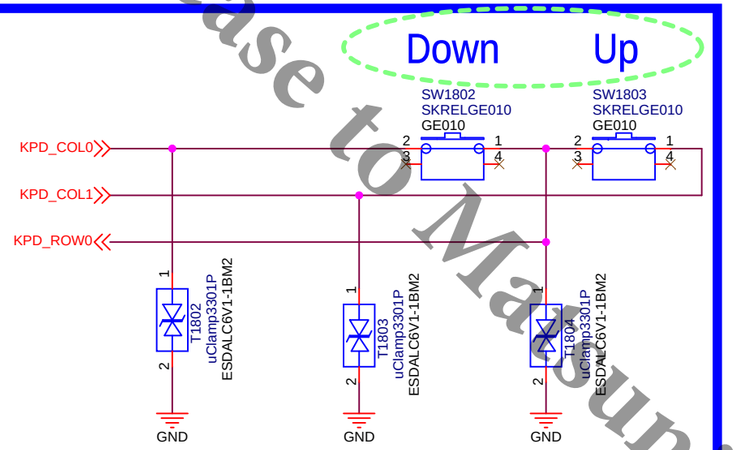

Lock = Pin 1 and Pin 2 is hort, g-sensor is off.
Un-lock = Pin 2 and Pin 3 is hort, g-sensor is on.

G-Sensor On/Off

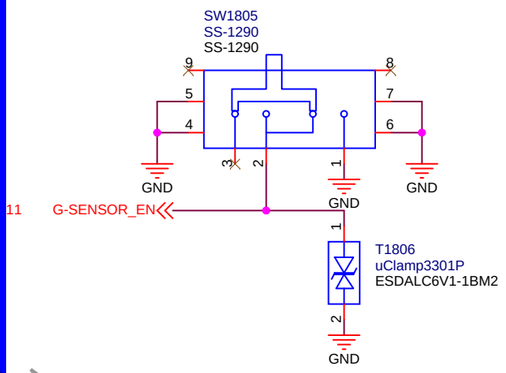

InnoComm Confidential. Release to Manufacturing

InnoComm Mobile Technology Corp.		
Project Name : Delphi 6107	Title : OMAP 4 Tablet PC (WiFi Version)	
Size : A3	Document Number : Peripherals	Rev : R007
Date: Thursday, May 24, 2012	Sheet : 18 of 30	

1- SDIO lines should be held high by the host.
2- TCXO_CLK_REQ_OUT,FREF_CLK_REQ_OUT should be held low by the host (Wired-OR ,active high).
3- VBATLDO_IN_TX_FM can be connected to 1V8 for reduced power consumption during FM TX.
Pls. note that maximum output power will be lower than with Vbat.
4- VBATLDO_IN_PA_BT can be connected to 1V8 for reduced power consumption during BT TX.
Pls. note that maximum output power will be lower than with Vbat.
5- VDD_TCXO_LDO_OUT should feed the TCXO power supply.
6- The SlimBus lines should be held high by the host or tied to GND

TCXO Mode	TCXO_M (E8)	TCXO_P (D8)
AC coupled	VIO	0.2Vpp-1.2Vpp
Digital Clk	0-1.8V	GND

Fref Mode	Fref_M (E5)	Fref_P (E6)
AC coupled	VIO	0.2Vpp-1.2Vpp
Digital Clk	0-1.8V	GND

C1913 is used for FM Co-Ex issues mitigation once TI will finally characterized this will be re considered

100Kohm is required when no pulldown on these lines. If these lines not used, tie directly to VIO(WL1281 E9, F7 PIN)

U1901 pin G8
TCXO LDO output voltage select:
GND -> 1.83V
Floating ->2.5V
VIO -> 2.87V

** Filter selection as well as Antenna is a customer decision.

The parts selected here served as an example only.

1.8V Out From Internal SMPS to 1V8 rail on board

Filter selection as well as Antenna is a customer decision.

The following filters serve as an example:
** TDK/EPC DEA162450BT-2092A4-H
** Murata LFB2H2G45CC1D005

Test Point
BT_EN TP1905 TP-0.5
WL_EN TP1906 TP-0.5
WLAN_IRQ# TP1907 TP-0.5

InnoComm Confidential. Released to Matsunichi.

innocomm	InnoComm Mobile Technology Corp.		
Project Name : Delphi 6107	Title : OMAP 4 Tablet PC (WiFi Version)		
Size : A2	Document Number : WL1281 (WiFi+BT+FM+GPS)		Rev : R007
Date: Thursday, May 24, 2012		Sheet : 19	of 30

Speaker R

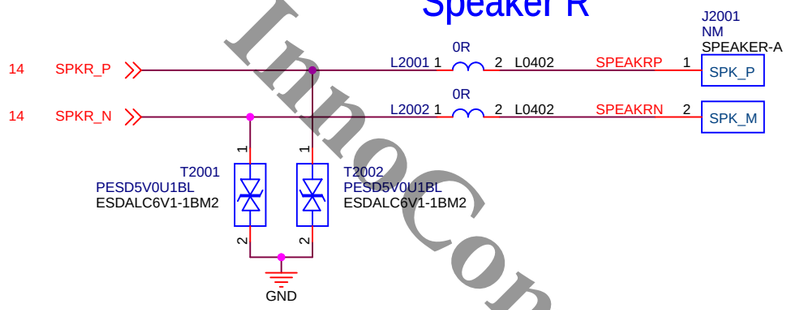

Speaker L

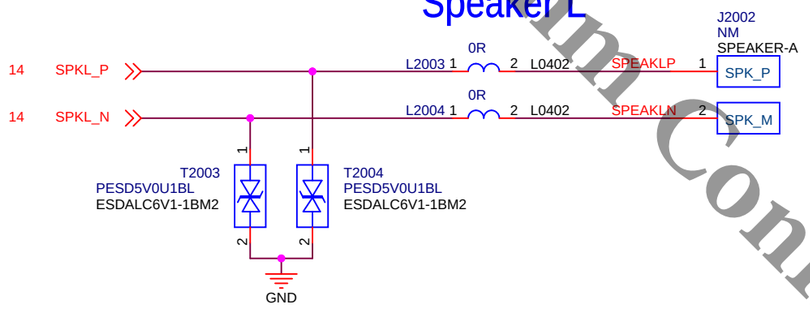

Microphone

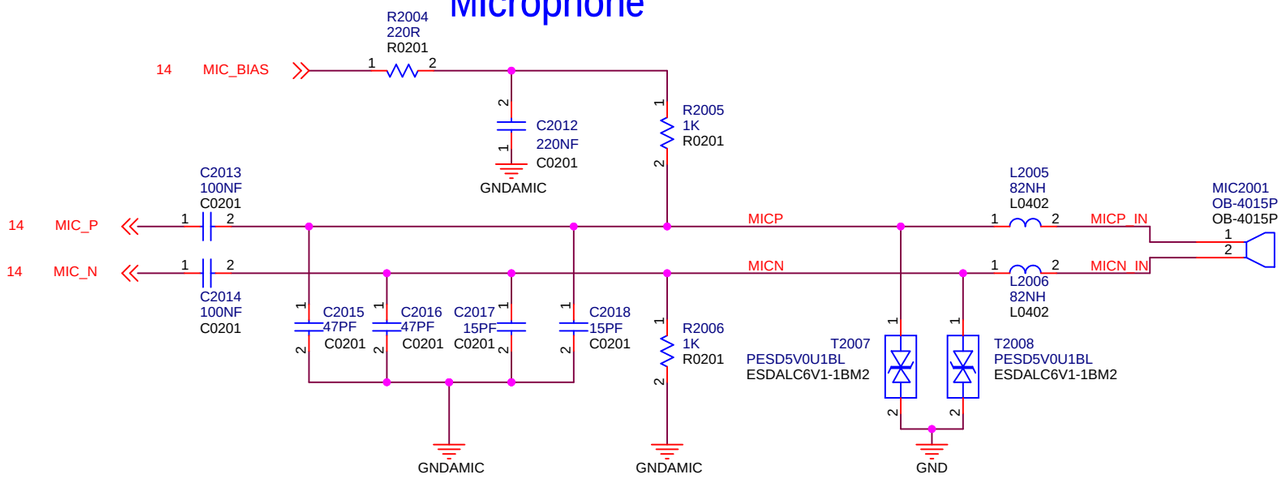

Earphone Jack

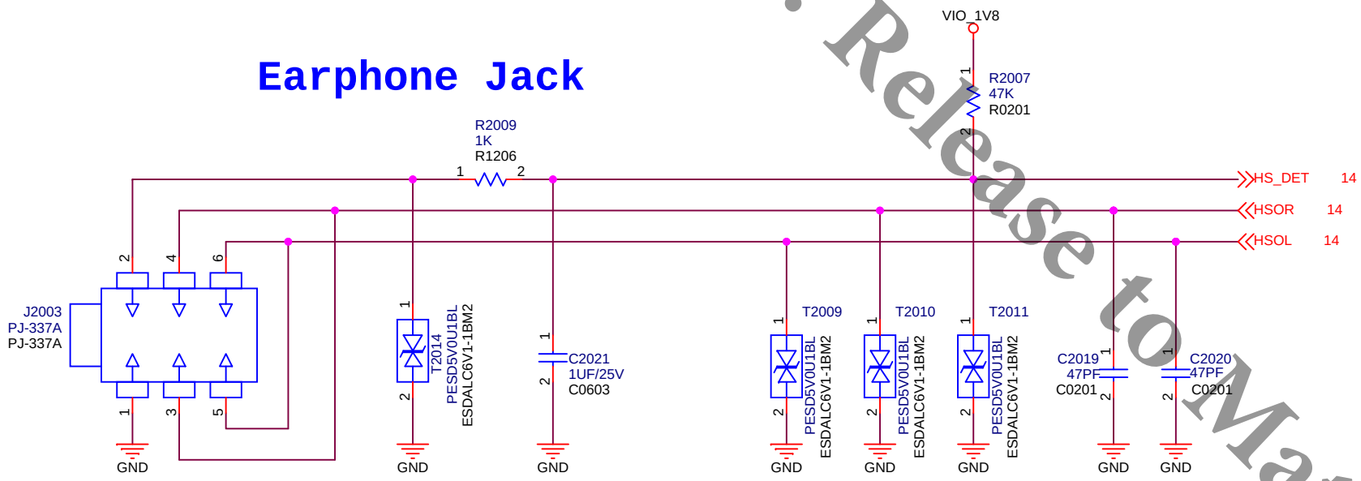

InnoComm Confidential. Release to Matsunichi

InnoComm Mobile Technology Corp.		
Project Name : Delphi 6107	Title : OMAP 4 Tablet PC (WiFi Version)	
Size : A3	Document Number : Audio	Rev : R007
Date: Thursday, May 31, 2012	Sheet : 20 of 30	

InnoComm Confidential. Release to Matsunichi

TP2104 TP-1.5
TP2103 TP-1.5
TP2101 TP-1.5
TP2102 TP-1.5

11 LOG_UART3_TX — LOG_UART3_TX
11 LOG_UART3_RX — LOG_UART3_RX
2,29 USIF1_RXD — USIF1_RXD
2,29 USIF1_TXD — USIF1_TXD

T2108
NM (PESD5V0L2UM)
PESD5V0L2UM

15 OTG_USB_ID — OTG_USB_ID
12 OTG_USB1_DM — OTG_USB1_DM
12 OTG_USB1_DP — OTG_USB1_DP
VUSB_BUS — VUSB_BUS

T2106 PESD5V0U1BL ESDALC6V1-1BM2
T2103 PESD5V0U1BL ESDALC6V1-1BM2
T2102 PESD5V0U1BL ESDALC6V1-1BM2
T2104 NM ESDALC6V1-1BM2
T2101 PTVS5V0S1UR PTVS5V0S1UR

Change Pin 5 from NC to VUSB_BUS

V_HDMI_5V
VUSB_BUS

C2106 10UF/10V C0603
C2105 100NF/10V C0201

J2103
AC-0300-117
AC0100-117

31	PAD1	PIN1	1	
32	PAD2	PIN2	2	
33	HOLE1	PIN3	3	C_HDMI_HPD
		PIN4	4	C_HDMI_CEC
		PIN5	5	OTG_USB1_DP
		PIN6	6	OTG_USB1_DM
		PIN7	7	
		PIN8	8	
		PIN9	9	
		PIN10	10	USIF1_TXD
		PIN11	11	USIF1_RXD
		PIN12	12	
		PIN13	13	OTG_USB_ID
		PIN14	14	C_HDMI_SCL
		PIN15	15	
		PIN16	16	
		PIN17	17	
		PIN18	18	
		PIN19	19	C_HDMI_SDA
		PIN20	20	
		PIN21	21	HDMI_D2+
		PIN22	22	HDMI_D2-
		PIN23	23	HDMI_D1+
		PIN24	24	HDMI_D1-
		PIN25	25	HDMI_D0+
		PIN26	26	HDMI_D0-
		PIN27	27	HDMI_CLK+
		PIN28	28	HDMI_CLK-
		PIN29	29	
34	HOLE2	PIN30	30	
35	PAD3			
36	PAD4			

GND

HDMI - Charge Pump/ESD/Level Translator

VBAT
C2103 10UF C0603
Place as close as possible to U2101 device pin
LQM21PN1R0MC0D
L2101 MIPSZ2012D1R0 L0805 1uH/1.1A

U2101
NM (TPD12S015)
TPD12S015

G2	VBAT	VCCB	F1
		FB	E1
F2	SW	CT_CP_HPD	D1
		LS_OE	A1
B1	SCL_A	SCL_B	E3
C1	SDA_A	SDA_B	F3
B2	CEC_A	CEC_B	D3
C2	HPD_A	HPD_B	G3
A3	D2+	VCCA	A2
A4	D2-		
B4	D1+	GND1	D2
C4	D1-	GND2	E2
D4	D0+	GND4	C3
E4	D0-	PGND1	B3
F4	CLK+	PGND2	G1
G4	CLK-		

rev. 1.6

V_HDMI_5V
R2103 100K R0201
R2100 100K R0201
C2101 10UF/10V C0603
C2102 100NF/10V C0201

HDMI_CT_CP_HPD 11
HDMI_LS_OE 11
Active low to shutdown

11 HDMI_SCL — C_HDMI_SCL
11 HDMI_SDA — C_HDMI_SDA
11 HDMI_CEC — C_HDMI_CEC
11 HDMI_HPD — C_HDMI_HPD

11 HDMI_D2+ — HDMI_D2+
11 HDMI_D2- — HDMI_D2-
11 HDMI_D1+ — HDMI_D1+
11 HDMI_D1- — HDMI_D1-
11 HDMI_D0+ — HDMI_D0+
11 HDMI_D0- — HDMI_D0-
11 HDMI_CLK+ — HDMI_CLK+
11 HDMI_CLK- — HDMI_CLK-

VIO_1V8
C2104 100NF C0201 Place as close as possible to U2101 device pin

GND

Can not turn off USB PHY power!

U2102
NM (USB3338C-GL-TR)
USB3321C

VBAT
R2101 NM (10K) R0201
C2107 NM C0201 (100NF)

	RESETB	B2	M_USBB1_RST
C2	VUSB		
C1	VBAT		
D2	VDD33		
B1	ID		
D1	DM		
E1	DP		
E3	SPK_L		
E2	SPK_R		

Low : Suspend
Ireset =~19uA

M_USBB1_RST 11

DATA7	D3	HSUSB1_D7
DATA6	E4	HSUSB1_D6
DATA5	E5	HSUSB1_D5
DATA4	D4	HSUSB1_D4
DATA3	D5	HSUSB1_D3
DATA2	C4	HSUSB1_D2
DATA1	C5	HSUSB1_D1
DATA0	B4	HSUSB1_D0
STP	A3	HSUSB1_STP
NXT	B5	HSUSB1_NXT
DIR	A4	HSUSB1_DIR

HSUSB1_D[0:7] 11
HSUSB1_STP 11
HSUSB1_NXT 11
HSUSB1_DIR 11

REFCLK	A2	CLK38.4M_IN_USB 23
CLKOUT	A5	USB1_CLK
VDD18	B3	
RBIAS	A1	
GND	C3	

R2110 NM (0R) R0201
HSUSB1_CLK 11

VIO_1V8
R2102 NM (8.06K_1%) R0201
C2109 NM C0201 (100NF)
Place as close as possible to U2102 device pin

C2108 close to U2102 Pin D2.
C2108 NM (2.2UF) C0402

2 USBB1_DM
2 USBB1_DP

ID function
no use VDD33
A device GND
B device floating

GND

innocomm	InnoComm Mobile Technology Corp.		
Project Name : Delphi 6107		Title : OMAP 4 Tablet PC (WiFi Version)	
Size : A3	Document Number : HDMI / USB		Rev : R007
Date: Friday, June 01, 2012		Sheet : 21 of 30	

SAMSUNG 9.7" TFT-LCD LTN097XL01-A01

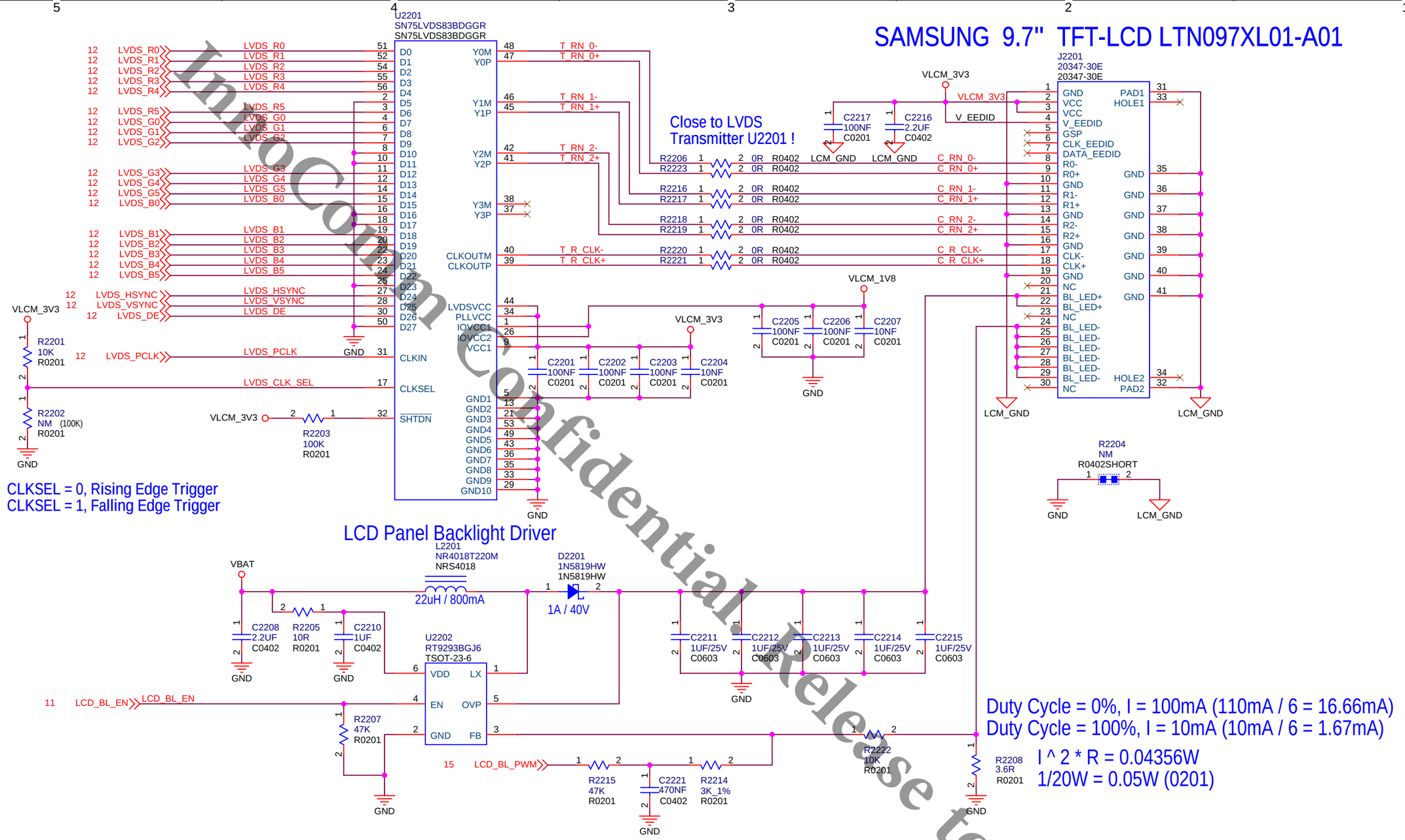

LCD Panel Backlight Driver

Remove Touch Key Circuit !

InnoComm Confidential Release to Matsunichi

InnoComm Mobile Technology Corp.		
Project Name : Delphi 6107	Title : OMAP 4 Tablet PC (WiFi Version)	
Size : A3	Document Number : LCD Panel and Backlight	Rev : R007
Date: Thursday, May 31, 2012	Sheet : 22 of 30	

Extarnal Charger IC

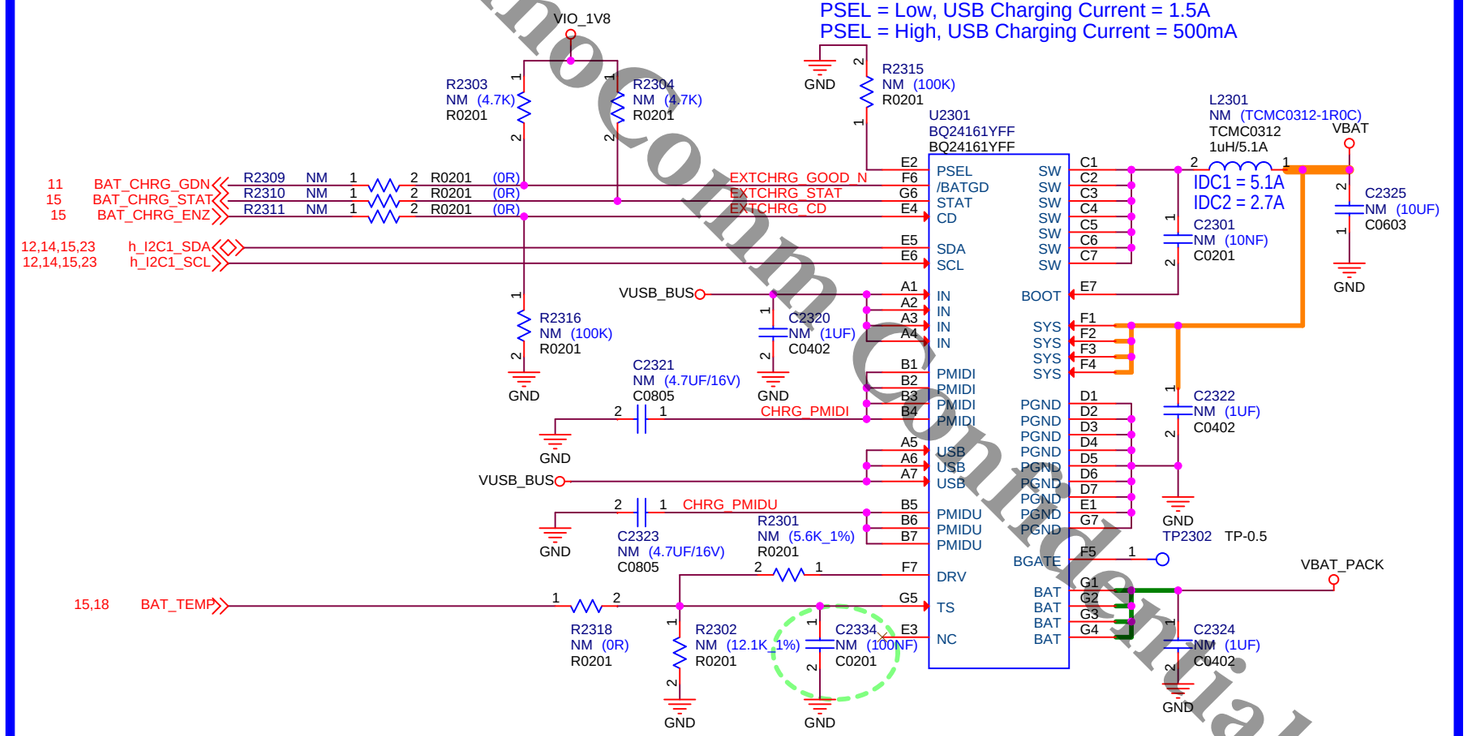

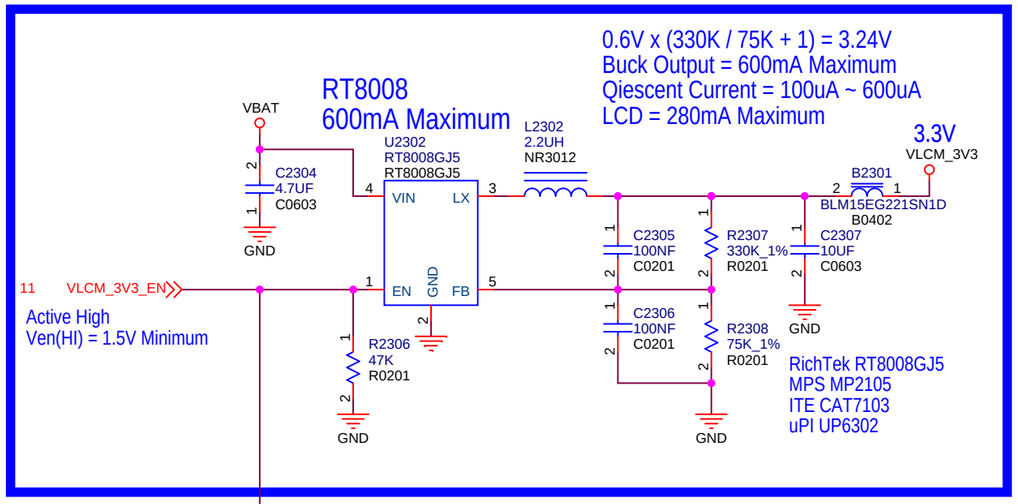

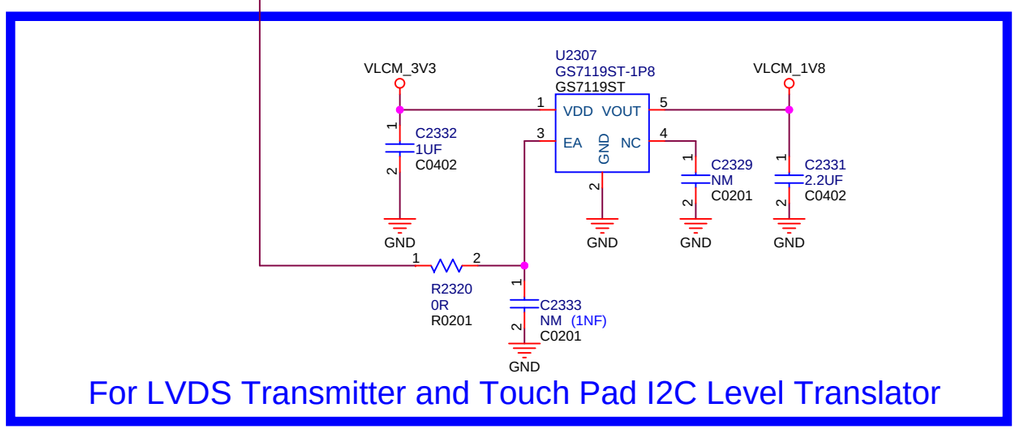

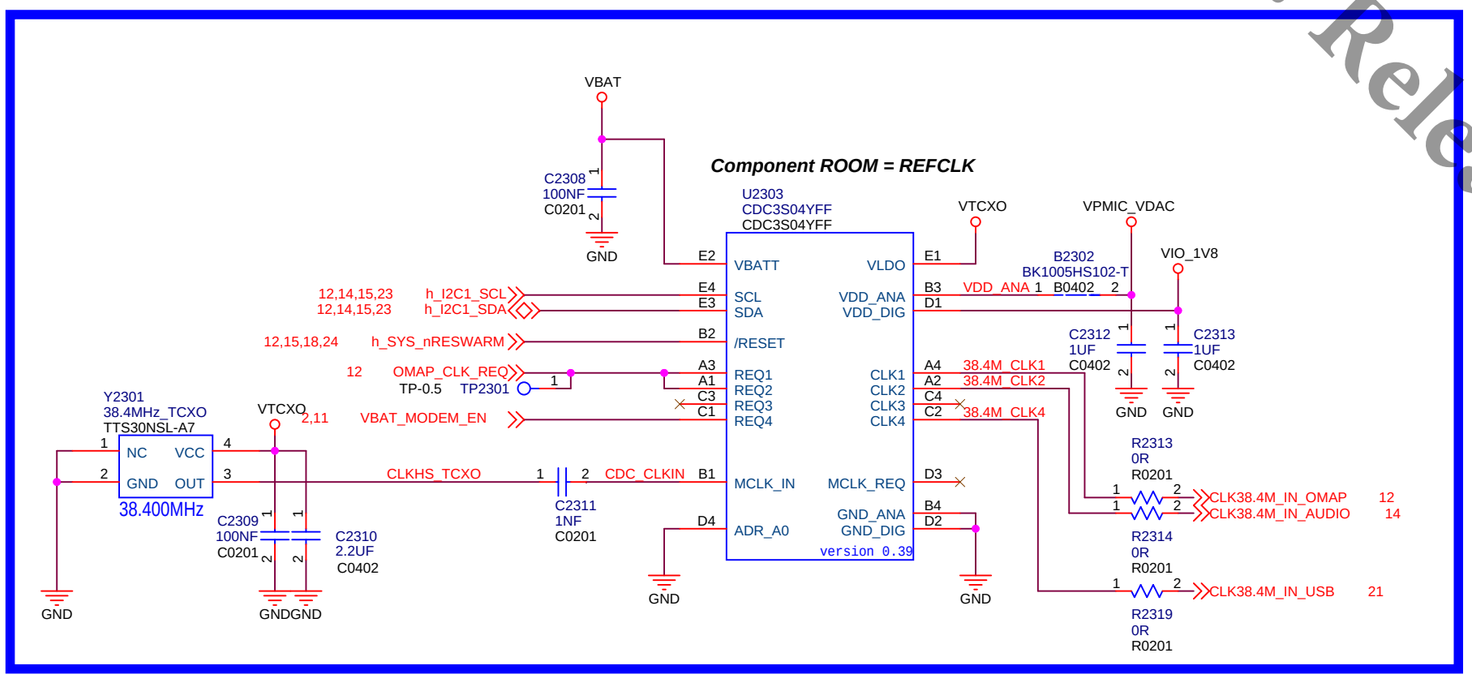

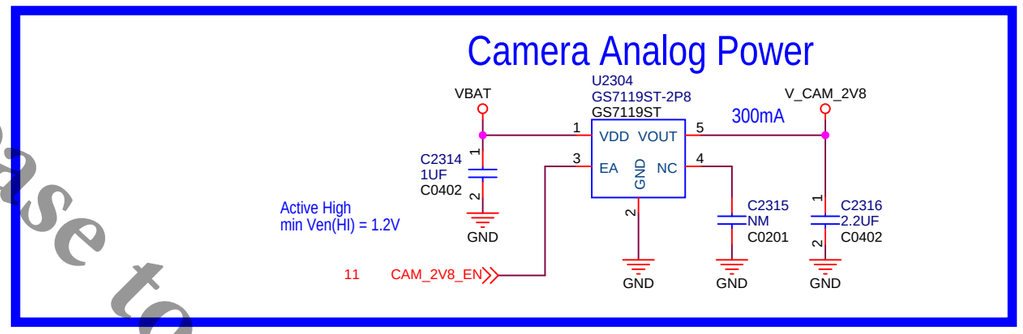

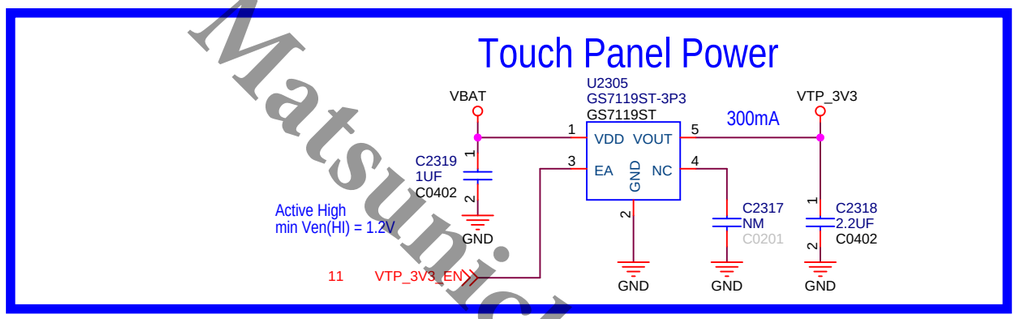

InnoComm Confidential. Release to Matsunichi

InnoComm Mobile Technology Corp.

Project Name : Delphi 6107	Title : OMAP 4 Tablet PC (WiFi Version)
Size : A3	Document Number : Clock / External LDO
Rev : R007	
Date: Thursday, May 31, 2012	Sheet : 23 of 30

Innocomm Confidential. Release to Matsunichi

Test points for debug purpose.

TP2401
TP-1.0

11 eMMC_AD[0:7] eMMC_AD[0:7]

eMMC_AD0
eMMC_AD1
eMMC_AD2
eMMC_AD3
eMMC_AD4
eMMC_AD5
eMMC_AD6
eMMC_AD7

TP2408
TP-1.0

11 eMMC_CMD eMMC_CMD

TP2409
TP-1.0

TP2410
TP-1.0

11 eMMC_CLK eMMC_CLK

TP2411
TP-1.0

eMMC_RESET

VIO_1V8

R2411
NM (0.0R)
R0201

R2410
NM (47K)
R0201

11 eMMC_RST

12,15,18,23 h_SYS_nRESWARM

U2402
NM (SN74LVC1G08DCK)
SN74LVC1G08DCK

GND

R2412
0R
R0201

U2401
Sandisk SDIN5C2-8G
169-FBGA

DATA0	H3	
DATA1	H4	
DATA2	H5	
DATA3	J2	
DATA4	J3	
DATA5	J4	
DATA6	J5	
DATA7	J6	
CMD	W5	
CLK	W6	
RTS#	U5	
VDDI	K2	
VCC1	M6	
VCC2	N5	
VCC3	T10	
VCC4	U9	
VCCQ1	K6	
VCCQ2	W4	
VCCQ3	Y4	
VCCQ4	AA3	
VCCQ5	AA5	
VSS1	M7	
VSS2	P5	
VSS3	R10	
VSS4	U8	
VSSQ1	K4	
VSSQ2	Y2	
VSSQ3	Y5	
VSSQ4	AA4	
VSSQ5	AA6	

C2401 1UF C0402
C2402 100NF C0201
C2403 100NF C0201
C2404 2.2UF C0402
C2405 100NF C0201
C2406 100NF C0201
C2407 100NF C0201
C2408 2.2UF C0402

VeMMC_2V9
VeMMC_1V8

B2401
BK1005HS102-T
B0402
300mA

VIO_1V8

innocomm	InnoComm Mobile Technology Corp.		
Project Name : Delphi 6107	Title : OMAP 4 Tablet PC (WiFi Version)		
Size : A4	Document Number : eMMC		Rev : R007
Date: Thursday, May 31, 2012		Sheet : 24 of 30	

Alternate MMC Card Power Source

Component ROOM = ALT_MMC_PWR

2:1 R-Mux selects both OMAP MMC & SD/MMC Card's operating voltage source from:
1) PHX PMIX for 200mA capacity
2) Discrete LDO for 400mA capacity needed for SDR50 IF (100MHz) support per SD 3.0 spec & is switchable via SYSBOOT7 for 1.8V or 3.0V.
3) Populate R1 & R2 per table for OMAP Overdrive Power Scheme without SYSBOOT7 FET & parallel R.
Connect directly to VBAT_PROC for VIN & enable with EN_VLDO_VMEM.

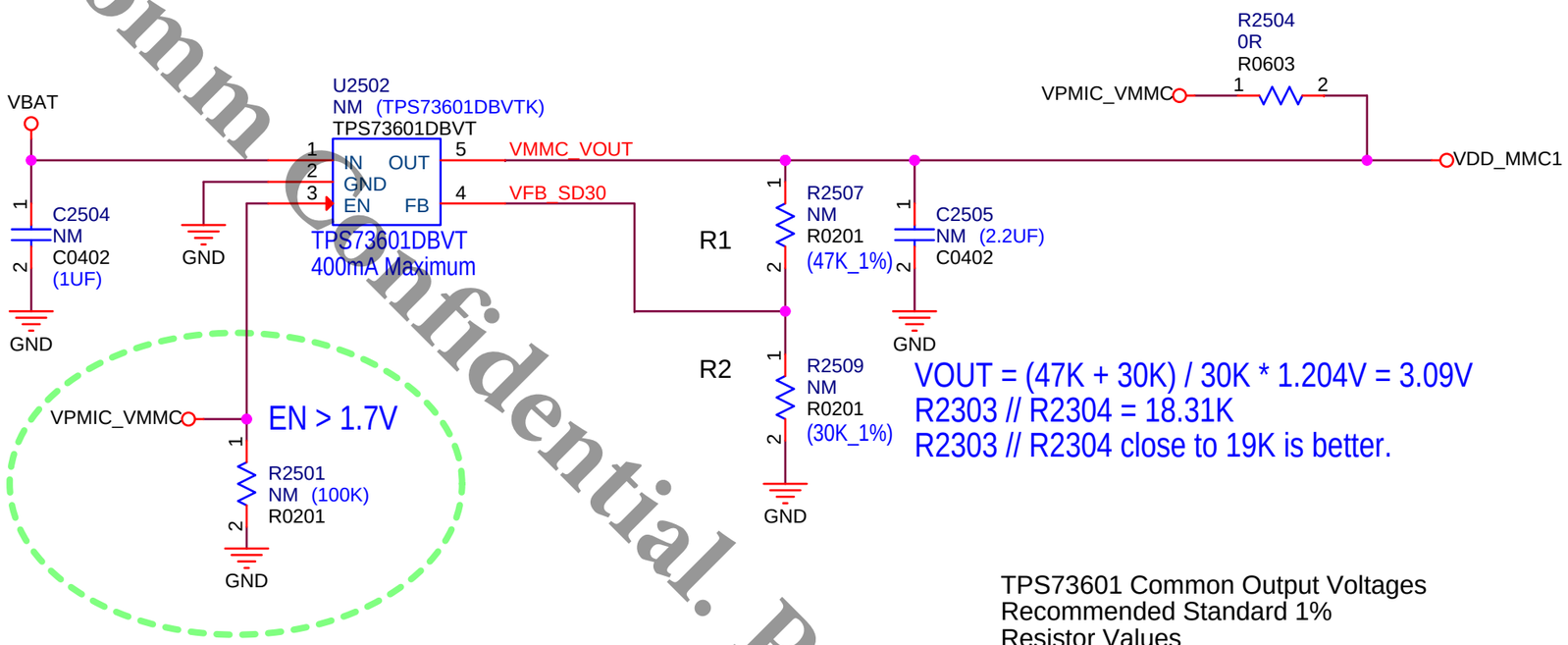

VOUT = (47K + 30K) / 30K * 1.204V = 3.09V
R2303 // R2304 = 18.31K
R2303 // R2304 close to 19K is better.

TPS73601 Common Output Voltages
Recommended Standard 1%
Resistor Values

Output Voltage	R1	R2
1.2V	0	DNI
1.8V	28.0K	56.2K
3.0V	46.4K	30.9K
3.3V	52.3K	30.1K

Iout = 400mA for VDO = 0.2V
Vout = 1.204 * ((R1 + R2)/R2)
R1|| R2 = 19K for best accuracy

InnoComm Confidential. Release to Matsunichi

InnoComm Mobile Technology Corp.
Project Name : Delphi 6107
Title : OMAP 4 Tablet PC (WiFi Version)
Size : A4
Document Number : VDD_CORE1 and VDD_MMC1 Power
Rev : R007
Date: Thursday, May 24, 2012
Sheet : 25 of 30

InnoComm Confidential. Release to Matsunichi

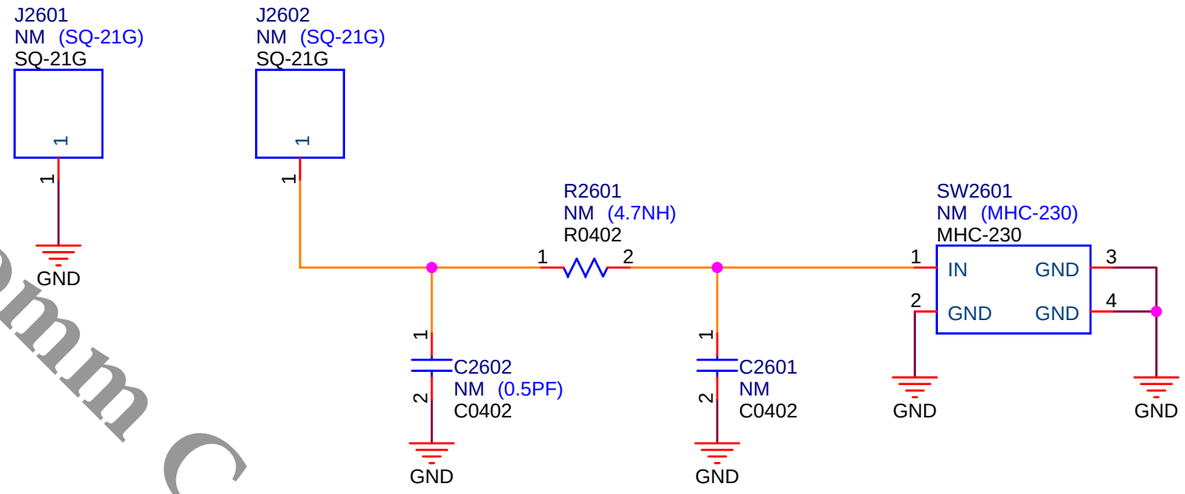

50ohm Single

RFT19	L001	RFT12
L1_3MIL RFTP		L1_3MIL RFTP
RFT14	L002	RFT18
L1_3.5MIL RFTP		L1_3.5MIL RFTP
RFT16	L003	RFT15
L1_4MIL RFTP		L1_4MIL RFTP
RFT28	L004	RFT17
L1_4.5MIL RFTP		L1_4.5MIL RFTP
RFT11	L005	RFT13
L1_5MIL RFTP		L1_5MIL RFTP

50ohm Single

RFT29	L006	RFT26
L1_10MIL RFTP		L1_10MIL RFTP
RFT38	L007	RFT37
L1_11MIL RFTP		L1_11MIL RFTP
RFT27	L008	RFT30
L8_11MIL RFTP		L8_11MIL RFTP

100ohm Diff

USBT12	L009	USBT11
L6_3MIL RFTP		L6_3MIL RFTP
USBT9	L010	USBT10
L6_3MIL RFTP		L6_3MIL RFTP

90ohm Diff

USBT16	L011	USBT15
L6_4MIL RFTP		L6_4MIL RFTP
USBT13	L012	USBT14
L6_4MIL RFTP		L6_4MIL RFTP

100ohm Diff

RFT36	L013	RFT35
L1_4MIL RFTP		L1_4MIL RFTP
RFT40	L014	RFT39
L1_4MIL RFTP		L1_4MIL RFTP
RFT42	L015	RFT41
L8_4MIL RFTP		L8_4MIL RFTP
RFT44	L016	RFT43
L8_4MIL RFTP		L8_4MIL RFTP

InnoComm Mobile Technology Corp.			
Project Name : Delphi 6107		Title : OMAP 4 Tablet PC (WiFi Version)	
Size : A4	Document Number : Modem Antenna		Rev : R007
Date: Thursday, May 24, 2012		Sheet : 26 of 30	

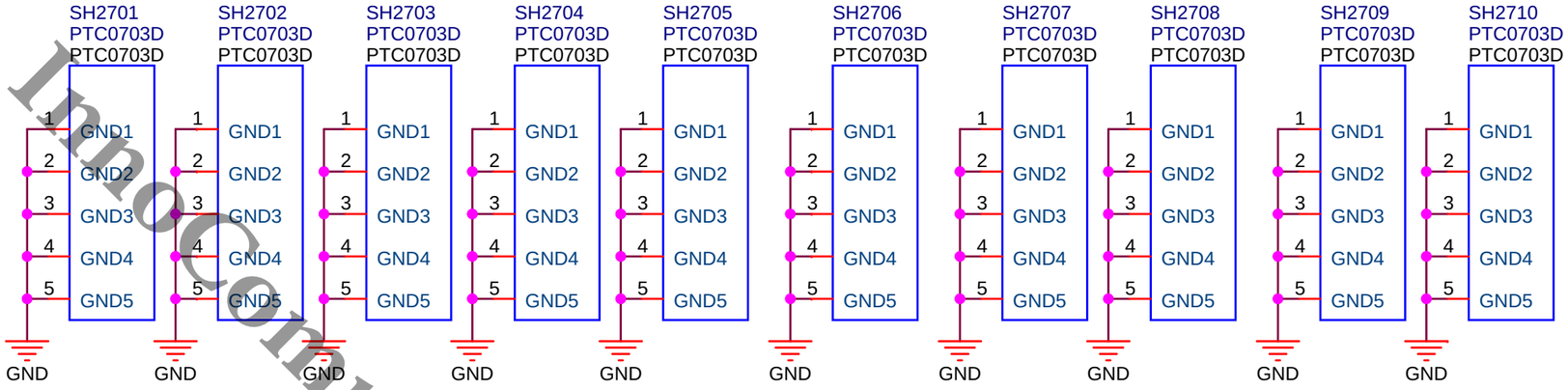

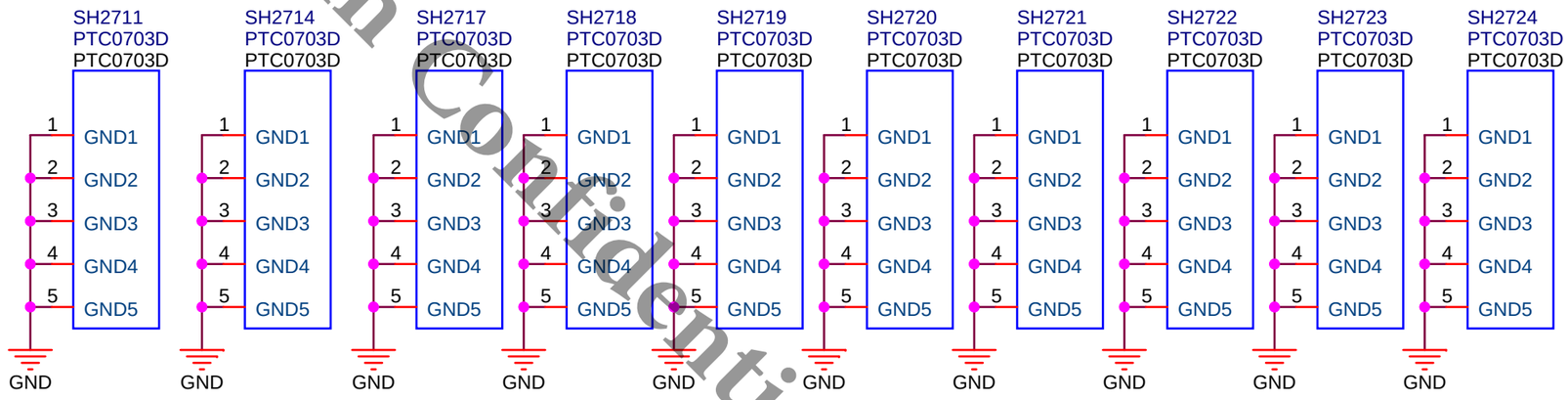

Screw Hole

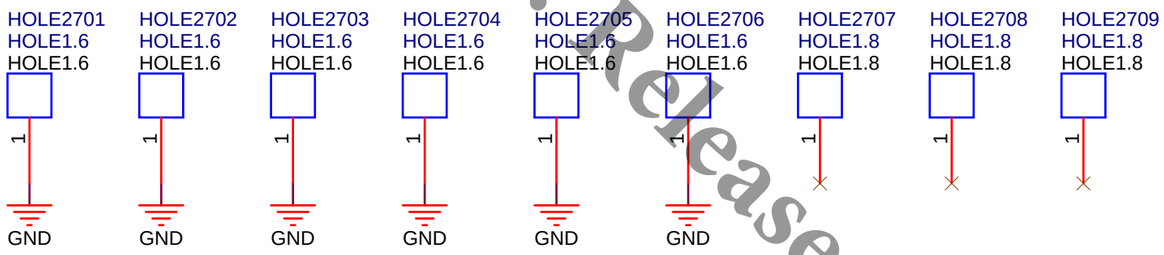

Fiducial Mark

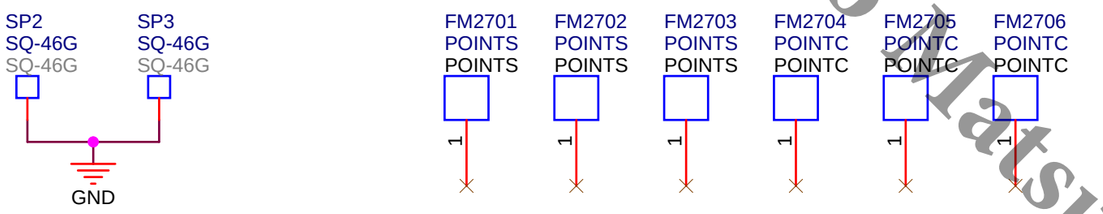

InnoComm Confidential
For Release to Flatsunic

InnoComm Mobile Technology Corp.		
Project Name : Delphi 6107	Title : OMAP 4 Tablet PC (WiFi Version)	
Size : A4	Document Number : Mechanical	Rev : R007
Date: Thursday, May 24, 2012	Sheet : 27 of 30	

InnoComm Confidential. Release to Matsunichi.

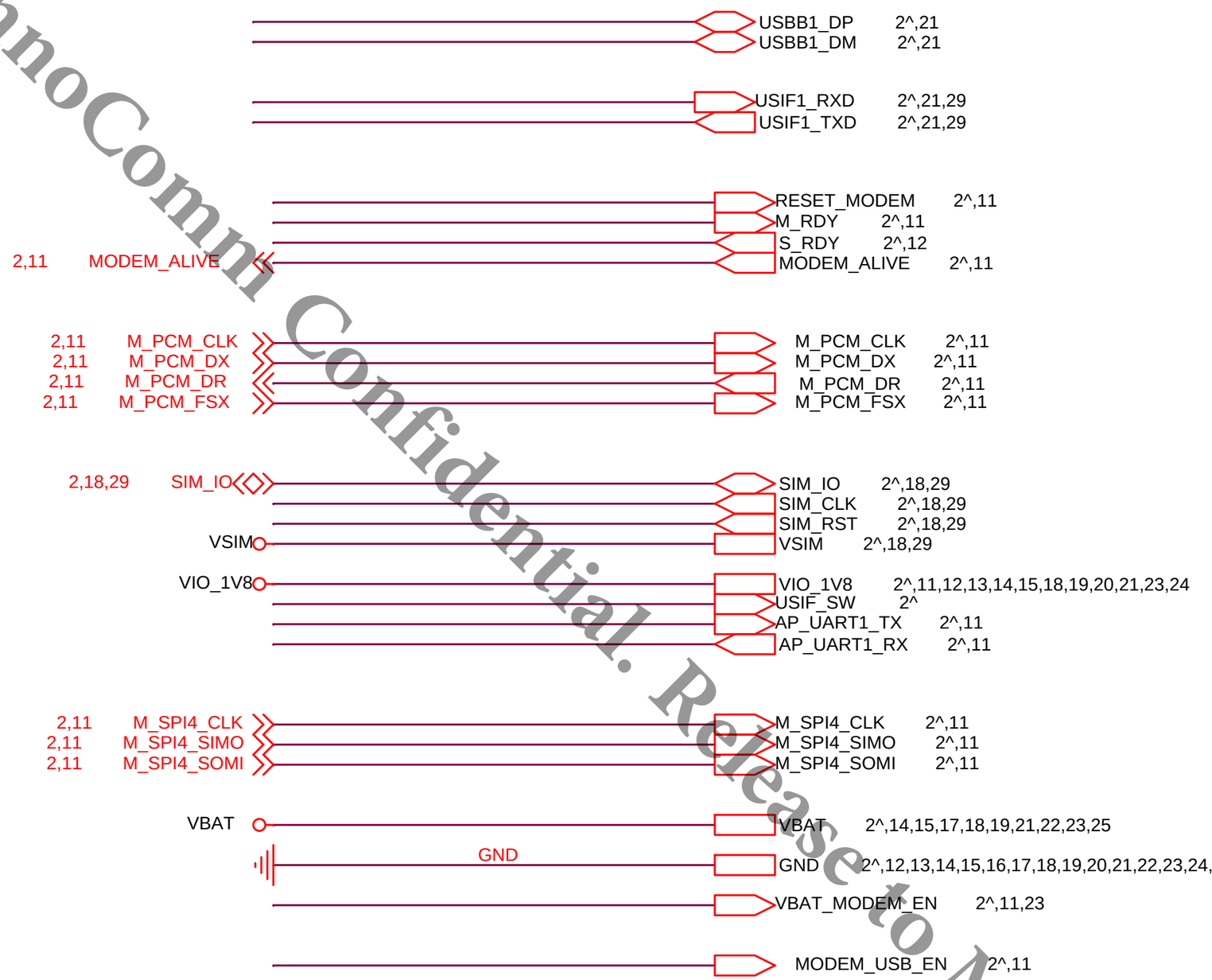

InnoComm Mobile Technology Corp.		
Project Name : Delphi 6107	Title : OMAP 4 Tablet PC (WiFi Version)	
Size : A	Document Number : Modem Interface	Rev : R007
Date: Thursday, May 24, 2012	Sheet : 28 of 30	

LGA PCIe PCB Adaptor

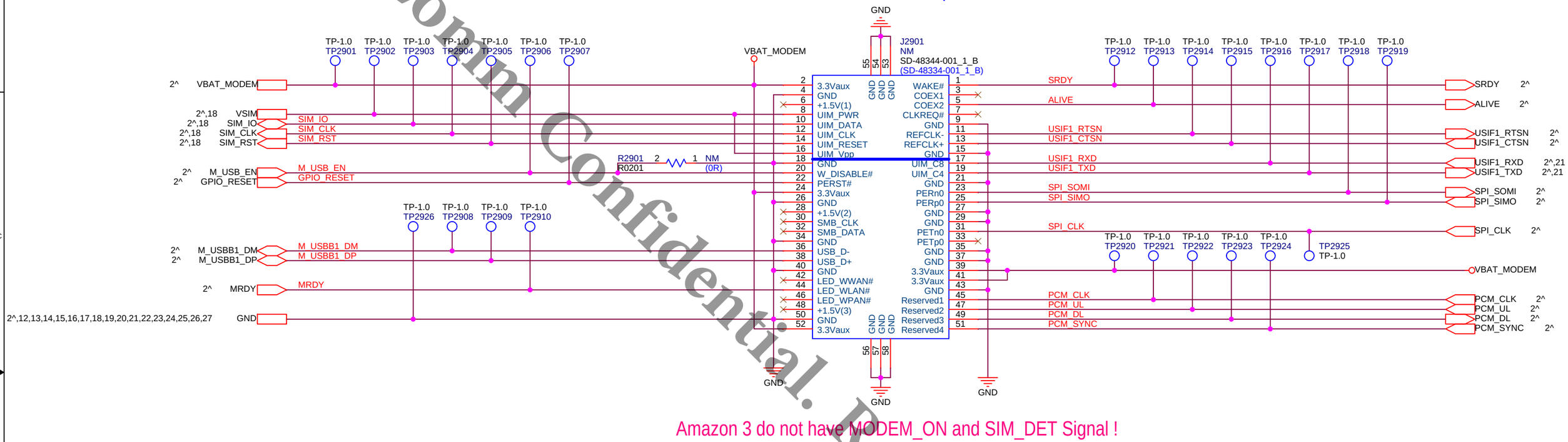

Amazon 3 do not have MODEM_ON and SIM_DET Signal !

InnoComm Confidential. Release to Matsunichi

InnoComm Mobile Technology Corp.		
Project Name : Delphi 6107	Title : OMAP 4 Tablet PC (WiFi Version)	
Size : A3	Document Number : Modem PCIe Slot	Rev : R007
Date: Thursday, May 24, 2012	Sheet : 29 of 30	