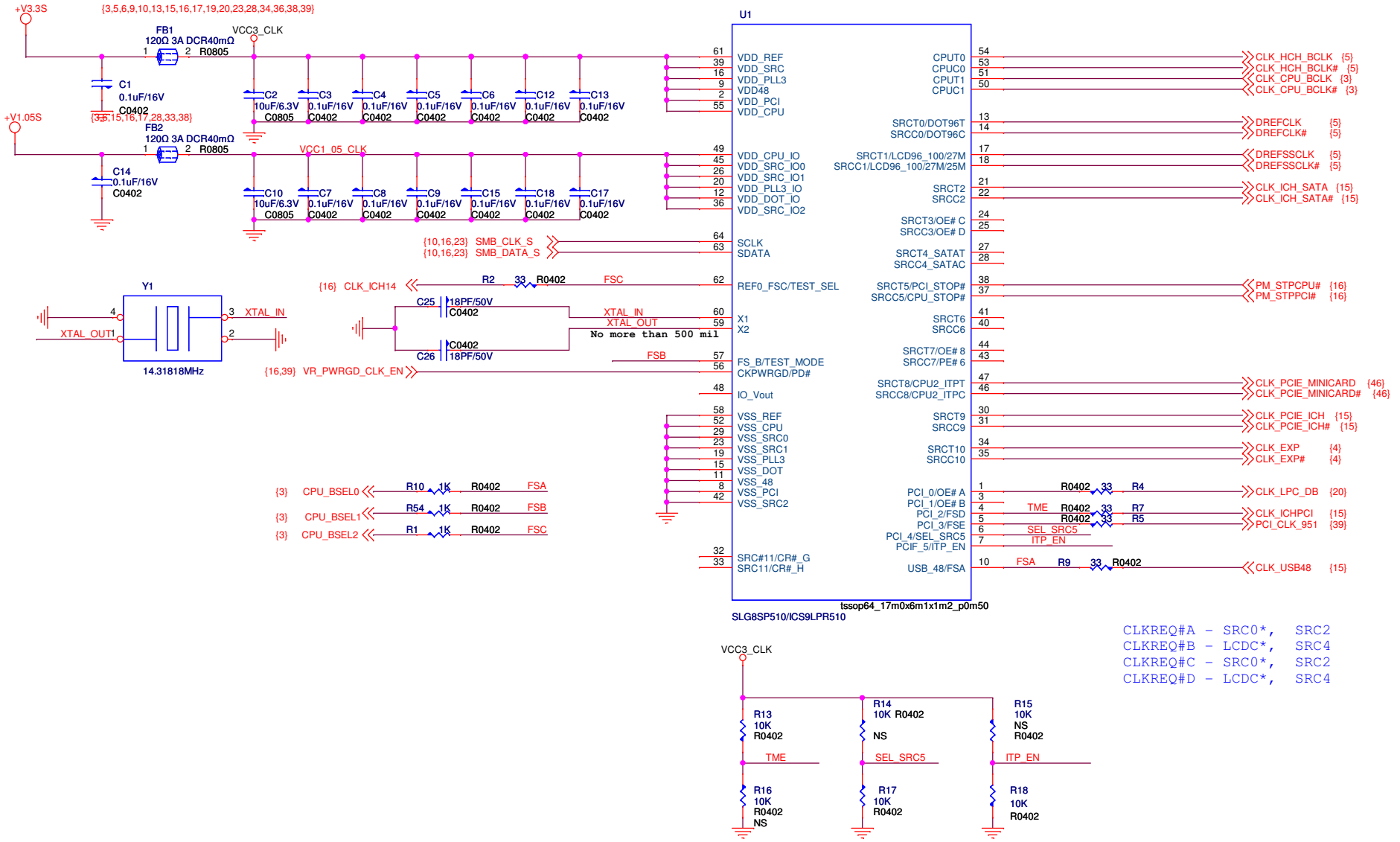

Title	<Title>	
Size B	Document Number <Doc>	Rev 99
Date: Wednesday, August 17, 2011	Sheet 2 of 44	

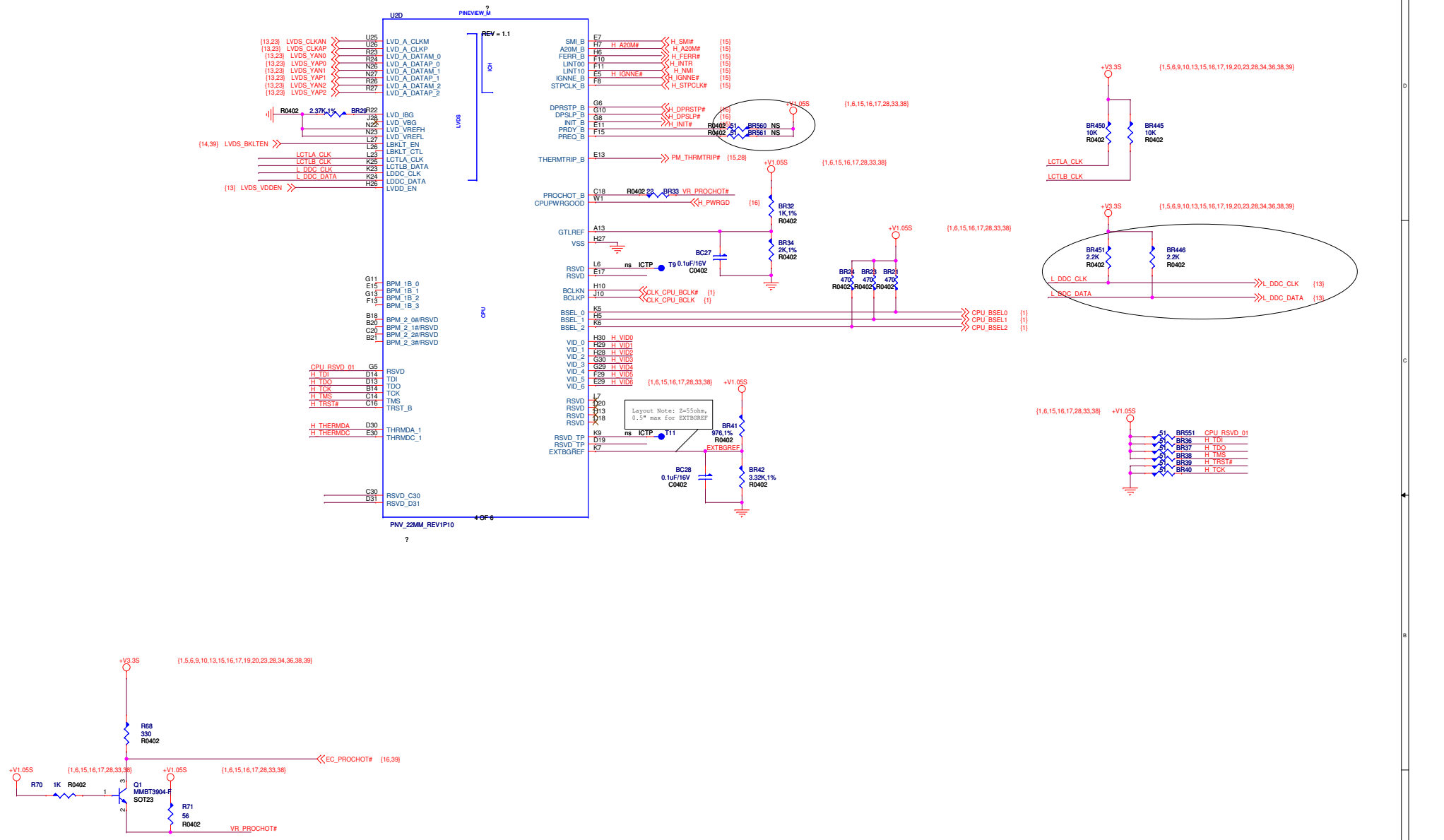

Title	<Title>		
Size C	Document Number <Doc>		Rev <RevCode>
Date: Wednesday, August 17, 2011	Sheet 3 of 44		

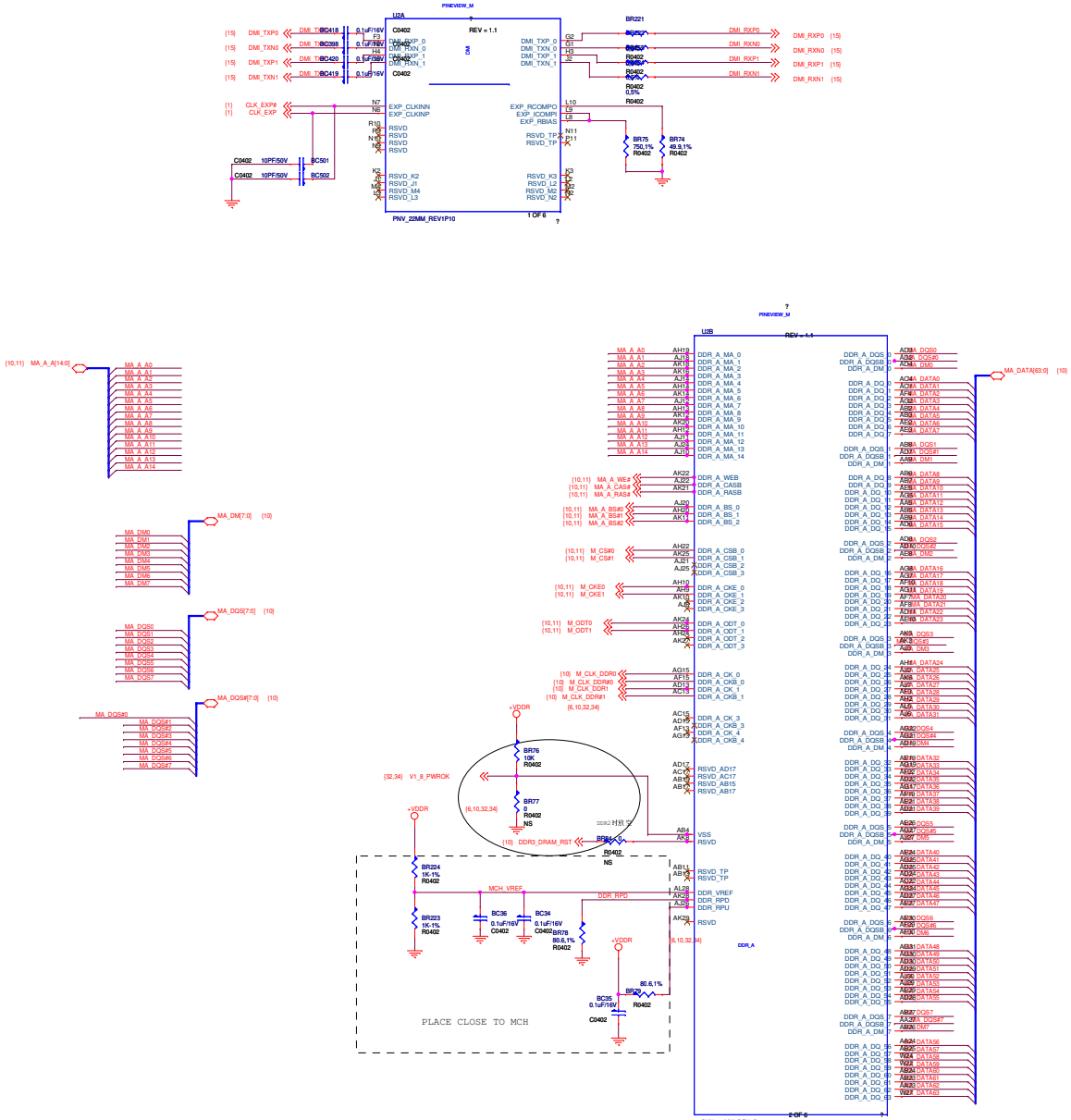

Title	<Title>		
Size	Document Number		Rev
	Custom <Doc>		<RevCode>
Date:	Wednesday, August 17, 2011	Sheet 4 of 44	

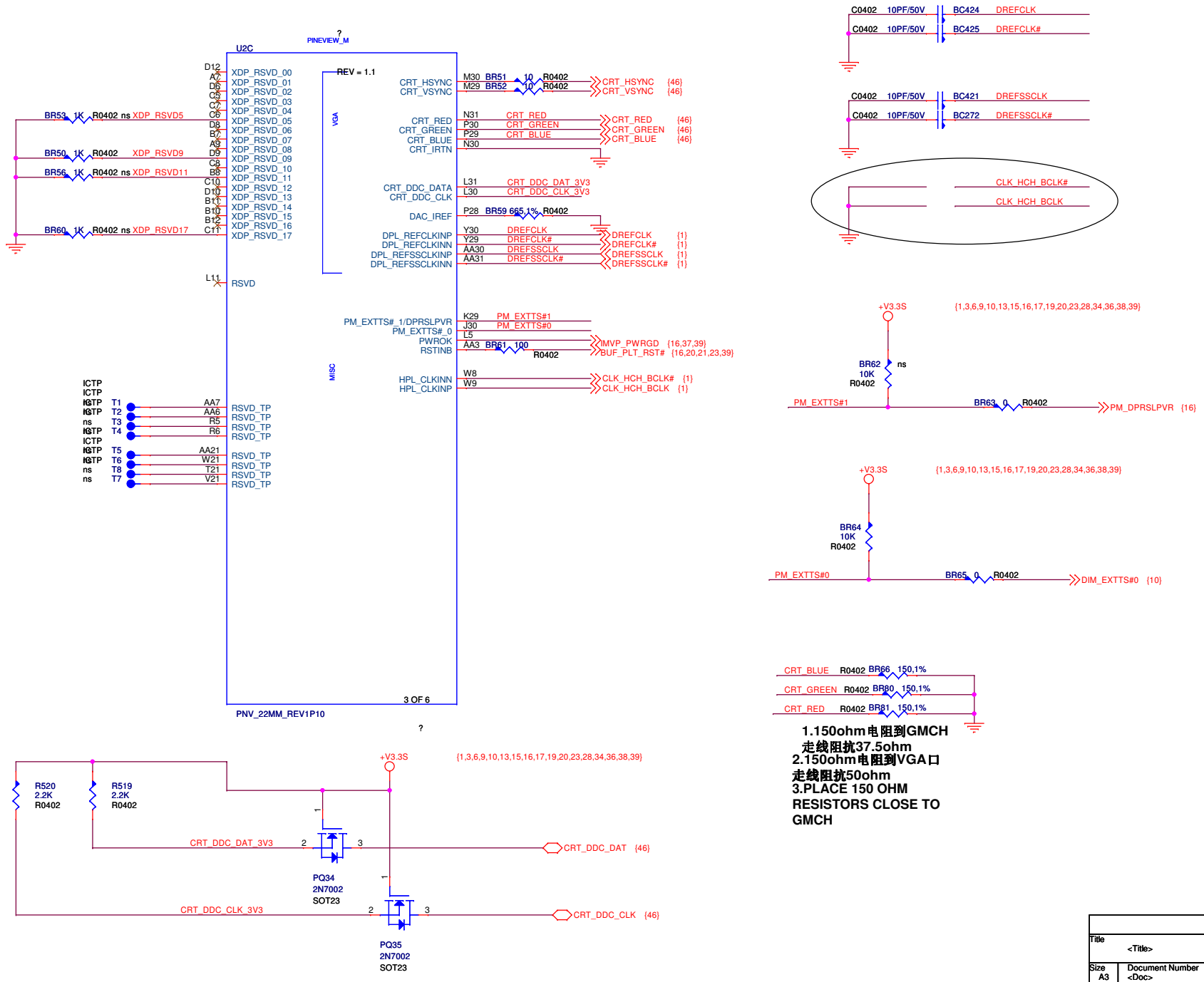

Title	<Title>	
Size A3	Document Number <Doc>	Rev <RevCode>
Date: Monday, January 17, 2011	Sheet 5 of 44	

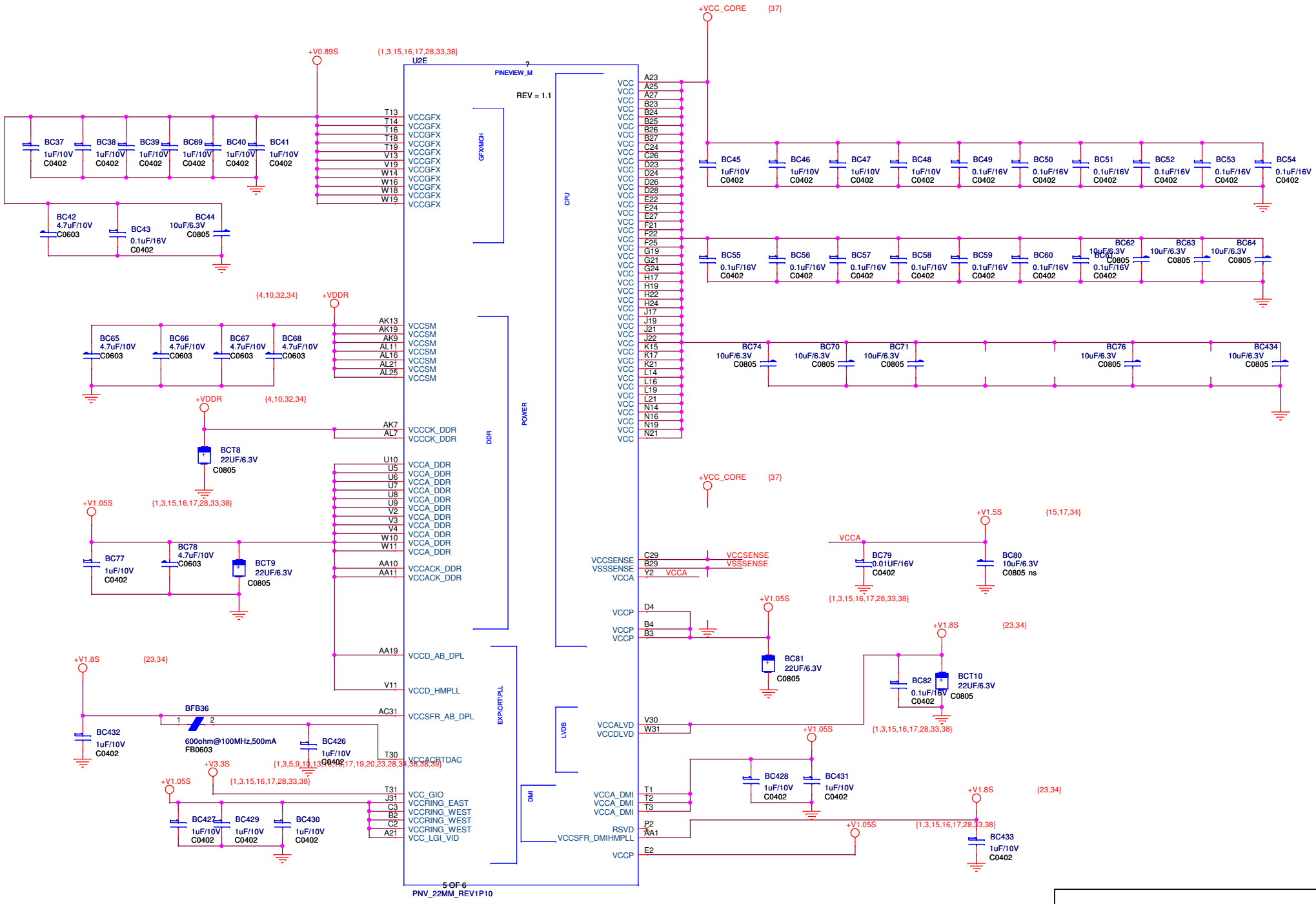
U2E
PINEVIEW_M
REV = 1.1
5 OF 6
PNV_22MM_REV1P10
GFX/MCH
CPU
POWER
DDR
EXP/CRT/PLL
LVDS
DMI
+V0.89S
{1,3,15,16,17,28,33,38}
+VCC_CORE
{37}
+VDDR
{4,10,32,34}
+V1.05S
{1,3,15,16,17,28,33,38}
+V1.8S
{23,34}
+V3.3S
{1,3,15,16,17,28,33,38}
+V1.5S
{15,17,34}
VCCA
BFB36
600ohm@100MHz,500mA
FB0603
Title
<Title>
Size
A3
Document Number
<Doc>
Rev
<RevCode>
Date:
Monday, January 17, 2011
Sheet
6
of
44

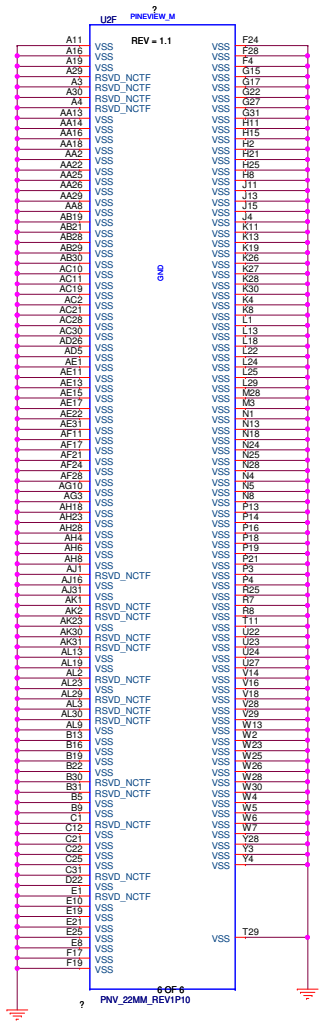

Title	<Title>		
Size C	Document Number <Doc>		Rev <RevCode>
Date: Monday, January 17, 2011	Sheet 7	of 44	

Title	<Title>		
Size C	Document Number <Doc>		Rev <RevCode>
Date: Monday, January 17, 2011	Sheet 8 of 44		

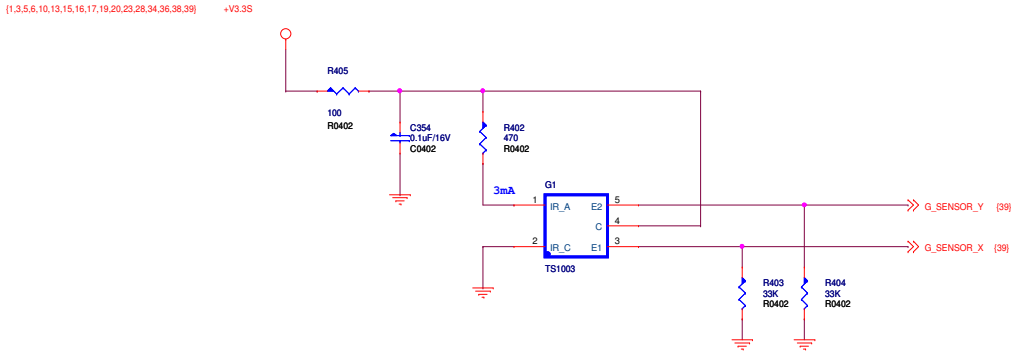

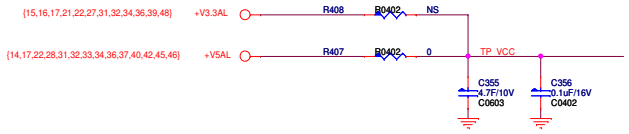

FOR I2C Interface TouchScreen

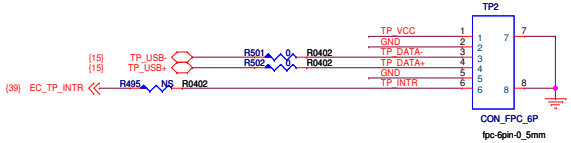

FOR USB Interface TouchScreen

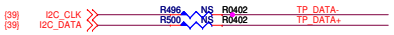

Title	<Title>	
Size C	Document Number <Doc>	Rev <RevCode>
Date: Monday, January 17, 2011	Sheet 9 of 44	

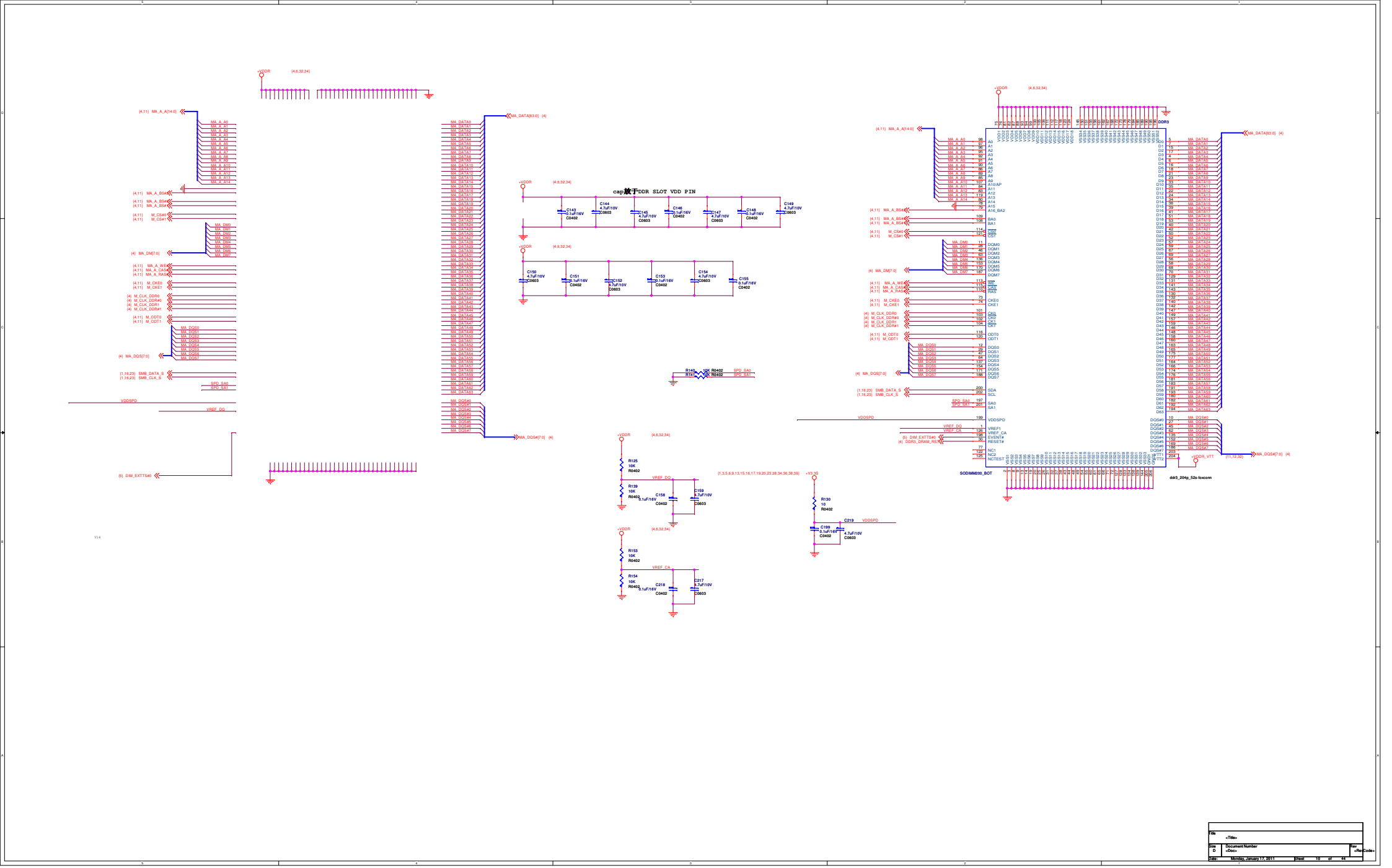

Title	<Title>		
Size D	Document Number <Doc>		Rev <RevCode>
Date: Monday, January 17, 2011		Sheet 10 of 44	

{4,10} MA_A_A[14:0]

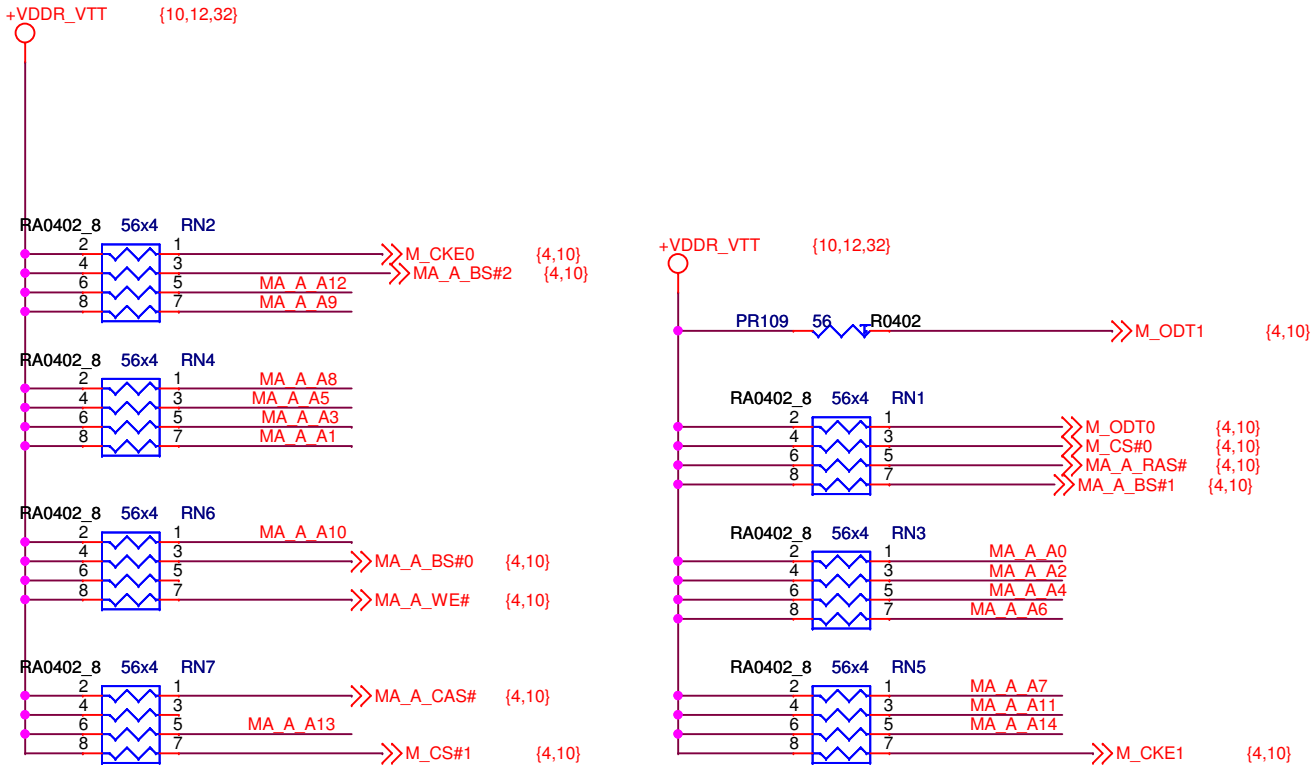

Title <Title>		
Size A4	Document Number <Doc>	Rev <RevC
Date: Monday, January 17, 2011	Sheet 11 of 44	

+VDDR_VTT {10,11,32}

每4个电阻对应2个0.1UF电容

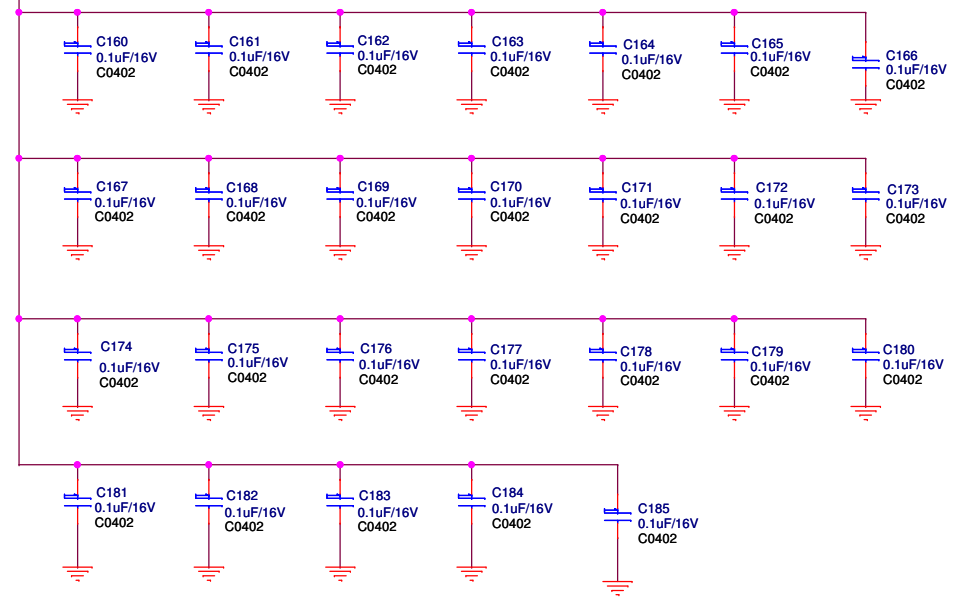

Title	<Title>	
Size B	Document Number <Doc>	Rev <RevCode>
Date: Monday, January 17, 2011	Sheet 12 of 44	

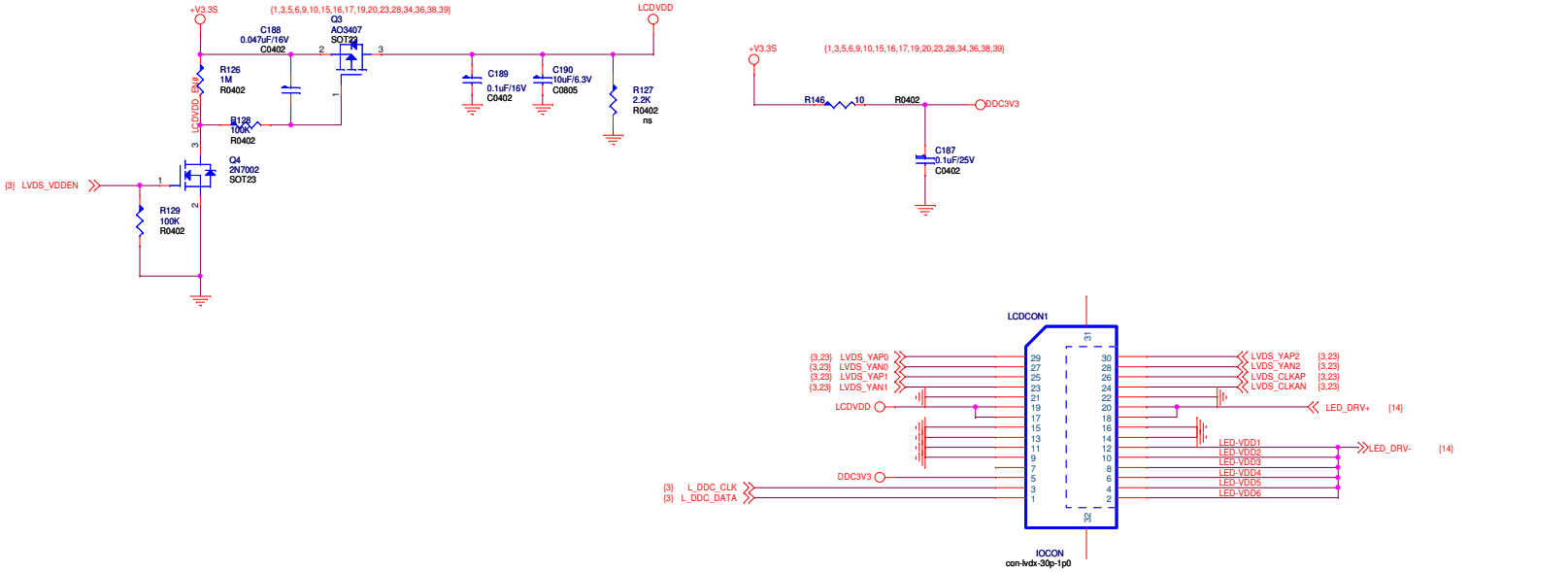

16.8V~19.2V

Title	<Title>		
Size C	Document Number <Doc>		Rev <RevCode>
Date: Monday, January 17, 2011	Sheet 13 of 44		

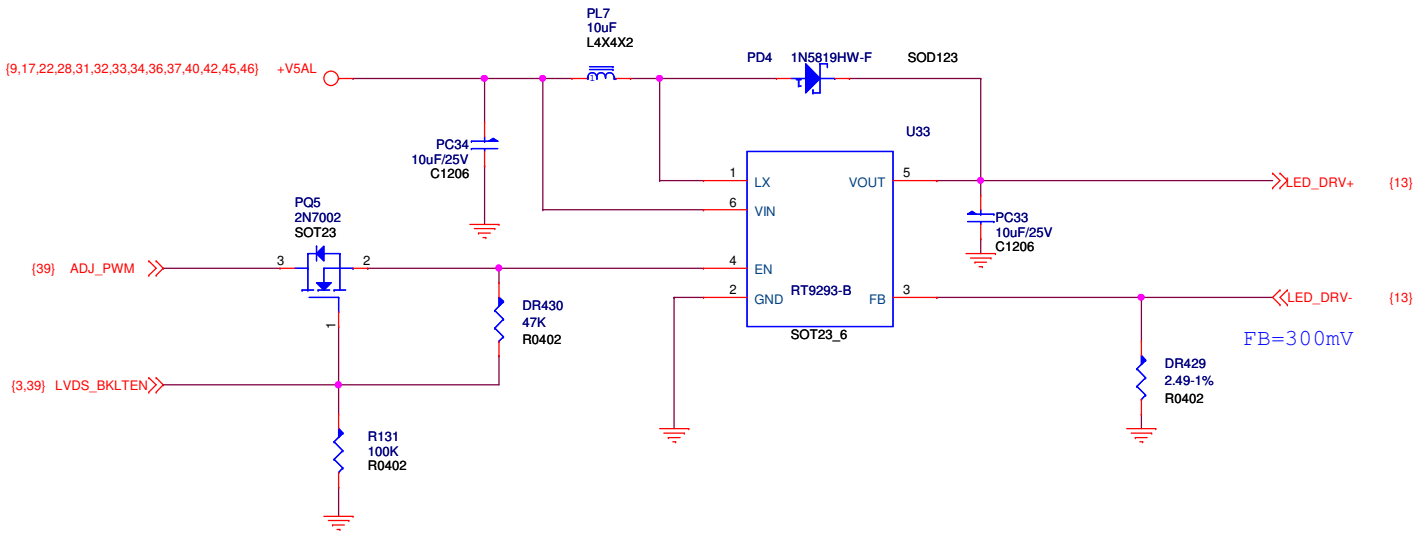

6x6 LEDs
V=3V * 6 = 18V
I=20mA*6 = 120mA
W=2.1W

Title	<Title>	
Size B	Document Number <Doc>	Rev 1
Date: Monday, January 17, 2011	Sheet 14 of 44	

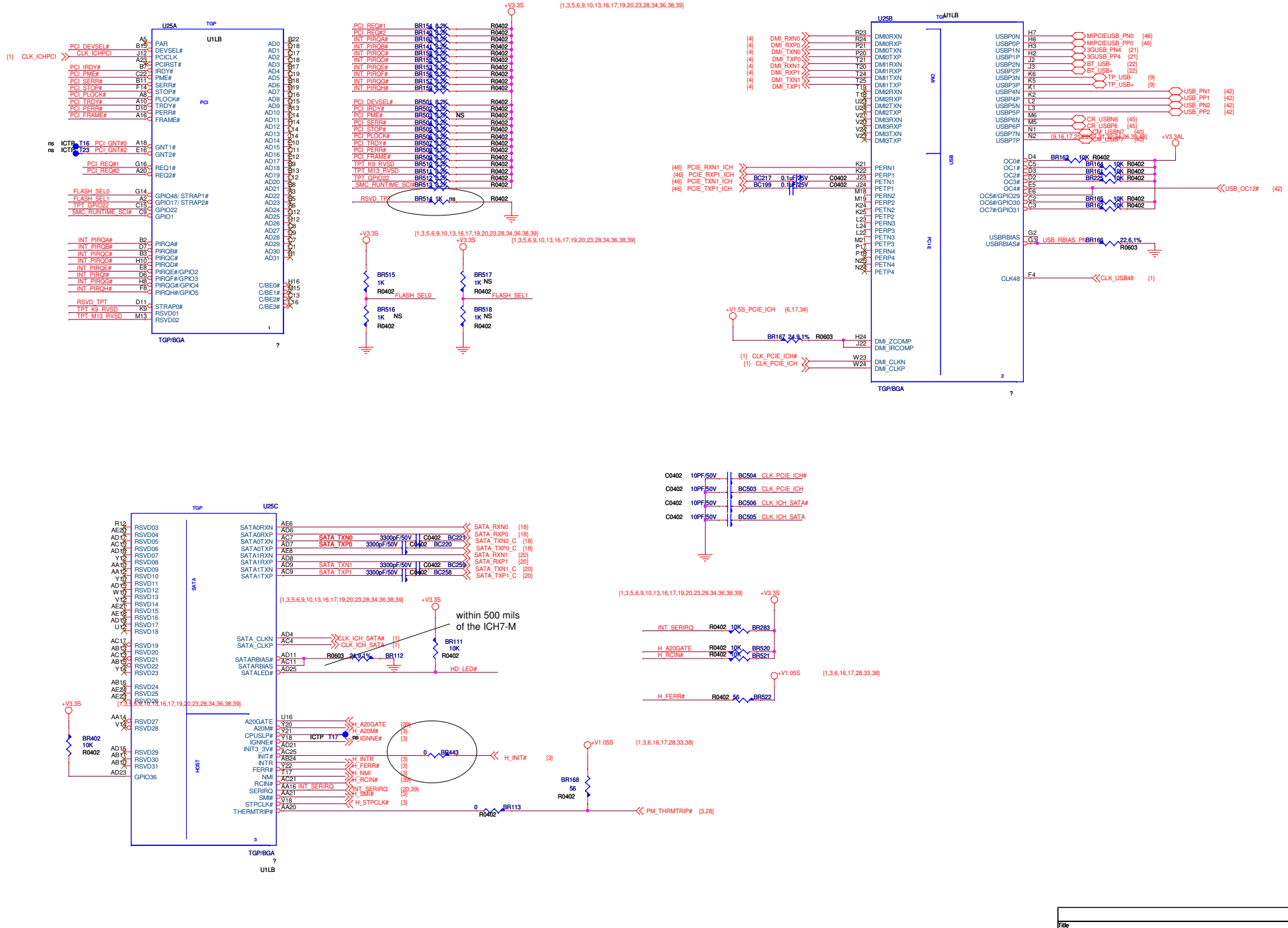

Title	<Title>		
Size C	Document Number <Doc>		Rev <RevCode>
Date:	Wednesday, August 17, 2011	Sheet 15 of 44	

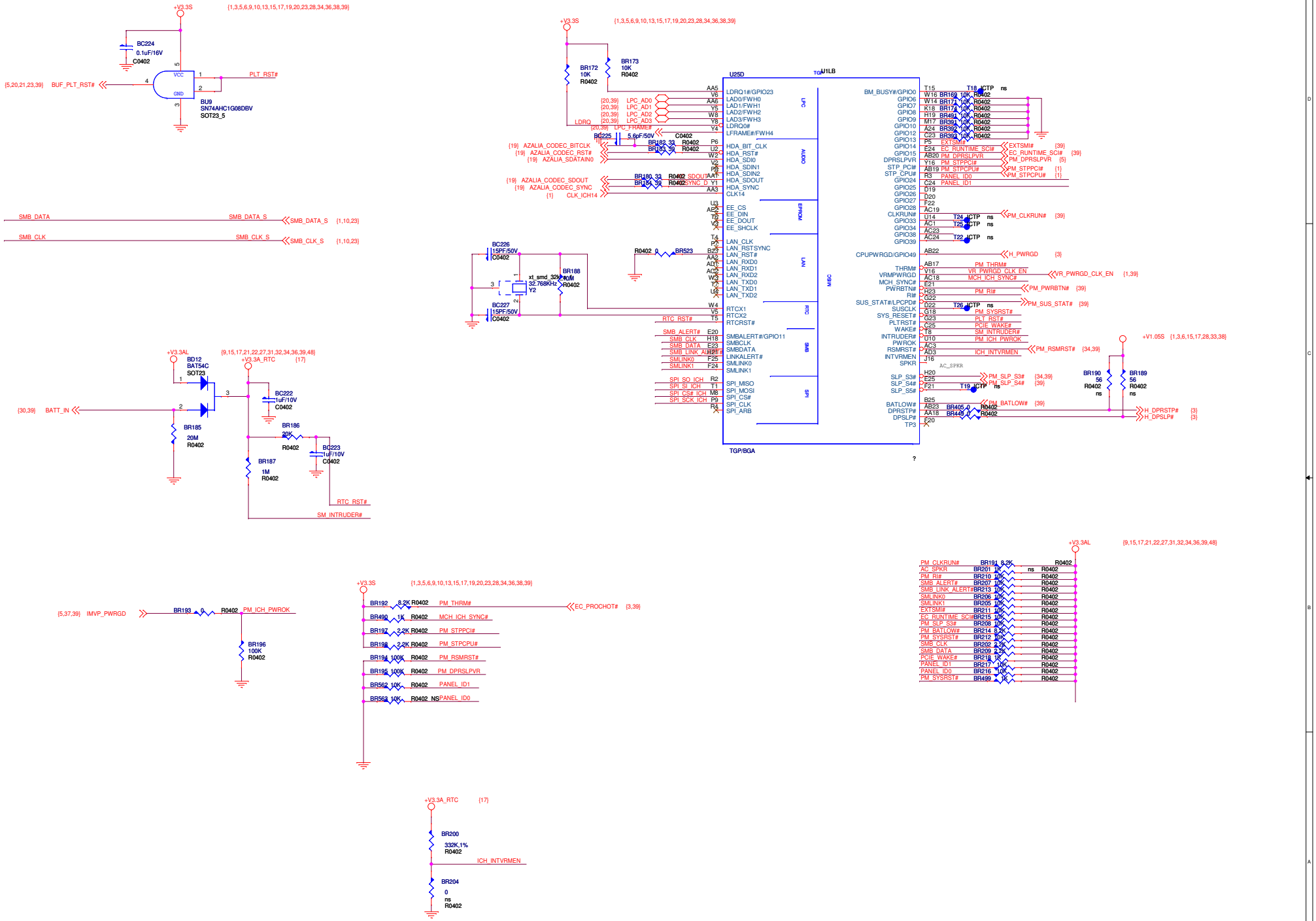
+V3.3S
{1,3,5,6,9,10,13,15,17,19,20,23,28,34,36,38,39}
BC224
0.1uF/16V
C0402
BU9
SN74AHC1G08DBV
SOT23_5
{5,20,21,23,39} BUF_PLT_RST#
PLT_RST#
U25D
U1LB
TGP/BGA
LDRQ1#/GPIO23
LAD0/FWH0
LAD1/FWH1
LAD2/FWH2
LAD3/FWH3
LDRQ0#
LFRAME#/FWH4
LPC
HDA_BIT_CLK
HDA_RST#
HDA_SDI0
HDA_SDIN1
HDA_SDIN2
HDA_SDOUT
HDA_SYNC
CLK14
AUDIO
EE_CS
EE_DIN
EE_DOUT
EE_SHCLK
EPROM
LAN_CLK
LAN_RSTSYNC
LAN_RST#
LAN_RXD0
LAN_RXD1
LAN_RXD2
LAN_TXD0
LAN_TXD1
LAN_TXD2
LAN
RTCX1
RTCX2
RTCRST#
RTC
SMBALERT#/GPIO11
SMBCLK
SMBDATA
LINKALERT#
SMLINK0
SMLINK1
SMB
SPI_MISO
SPI_MOSI
SPI_CS#
SPI_CLK
SPI_ARB
SPI
BM_BUSY#/GPIO0
GPIO6
GPIO7
GPIO8
GPIO9
GPIO10
GPIO12
GPIO13
GPIO14
GPIO15
DPRSLPVR
STP_PCI#
STP_CPU#
GPIO24
GPIO25
GPIO26
GPIO27
GPIO28
CLKRUN#
GPIO33
GPIO34
GPIO38
GPIO39
CPUPWRGD/GPIO49
THRM#
VRMPWRGD
MCH_SYNC#
PWRBTN#
RI#
SUS_STAT#/LPCPD#
SUSCLK
SYS_RESET#
PLTRST#
WAKE#
INTRUDER#
PWROK
RSMRST#
INTVRMEN
SPKR
SLP_S3#
SLP_S4#
SLP_S5#
BATLOW#
DPRSTP#
DPSLP#
TP3
SMB_DATA
SMB_DATA_S
SMB_CLK
SMB_CLK_S
{1,10,23}
BC226
15PF/50V
C0402
BC227
15PF/50V
C0402
xt_smd_32.768KHz
32.768KHz
Y2
BR188
20M
R0402
BR523
{19} AZALIA_CODEC_BITCLK
{19} AZALIA_CODEC_RST#
{19} AZALIA_SDATAIN0
{19} AZALIA_CODEC_SDOUT
{19} AZALIA_CODEC_SYNC
{1} CLK_ICH14
{20,39} LPC_AD0
{20,39} LPC_AD1
{20,39} LPC_AD2
{20,39} LPC_AD3
{20,39} LPC_FRAME#
LDRQ
BR172
10K
R0402
BR173
10K
R0402
BC225
5.6pF/50V
C0402
BR182 33
BR183 33
BR180 33
BR184 33
R0402
SDOUT
SYNC
D_V
PM_CLKRUN# {39}
EXTSMI# {39}
EC_RUNTIME_SCI# {39}
PM_DPRSLPVR {5}
PM_STPPCI# {1}
PM_STPCPU# {1}
PANEL_ID0
PANEL_ID1
H_PWRGD {3}
PM_THRM#
VR_PWRGD_CLK_EN {1,39}
MCH_ICH_SYNC#
PM_RI#
PM_PWRBTN# {39}
PM_SUS_STAT# {39}
PM_SYSRST#
PLT_RST#
PCIE_WAKE#
SM_INTRUDER#
ICH_INTVRMEN
PM_RSMRST# {34,39}
PM_SLP_S3# {34,39}
PM_SLP_S4# {39}
AC_SPKR
PM_BATLOW# {39}
H_DPRSTP# {3}
H_DPSLP# {3}
+V1.05S {1,3,6,15,17,28,33,38}
BR189
56
R0402
BR190
56
R0402
{30,39} BATT_IN
BD12
BAT54C
SOT23
BR185
20M
R0402
BC222
1uF/10V
C0402
BR186
20K
R0402
BR187
1M
R0402
BC223
1uF/10V
C0402
+V3.3AL
{9,15,17,21,22,27,31,32,34,36,39,48}
+V3.3A_RTC
{17}
RTC_RST#
SM_INTRUDER#
{5,37,39} IMVP_PWRGD
BR193
0
R0402
PM_ICH_PWROK
BR196
100K
R0402
BR192 8.2K R0402 PM_THRM#
BR490 1K R0402 MCH_ICH_SYNC#
BR197 2.2K R0402 PM_STPPCI#
BR198 2.2K R0402 PM_STPCPU#
BR194 100K R0402 PM_RSMRST#
BR195 100K R0402 PM_DPRSLPVR
BR562 10K R0402 PANEL_ID1
BR563 10K R0402 NS PANEL_ID0
EC_PROCHOT# {3,39}
BR200
332K,1%
R0402
BR204
0
ns
R0402
PM_CLKRUN#
AC_SPKR
PM_RI#
SMB_ALERT#
SMB_LINK_ALERT#
SMLINK0
SMLINK1
EC_RUNTIME_SCI#
PM_SLP_S3#
PM_BATLOW#
PM_SYSRST#
SMB_CLK
SMB_DATA
PCIE_WAKE#
PANEL_ID1
PANEL_ID0
PM_SYSRST#
BR191 8.2K
BR201 1K
BR210 10K
BR207 10K
BR213 10K
BR206 10K
BR205 10K
BR211 10K
BR215 10K
BR208 10K
BR214 2.2K
BR212 10K
BR202 2.2K
BR209 2.2K
BR218 1K
BR217 10K
BR216 10K
BR499 1K
R0402
Title
<Title>
Size C
Document Number
<Doc>
Rev
<RevCode>
Date: Wednesday, August 17, 2011
Sheet 16 of 44

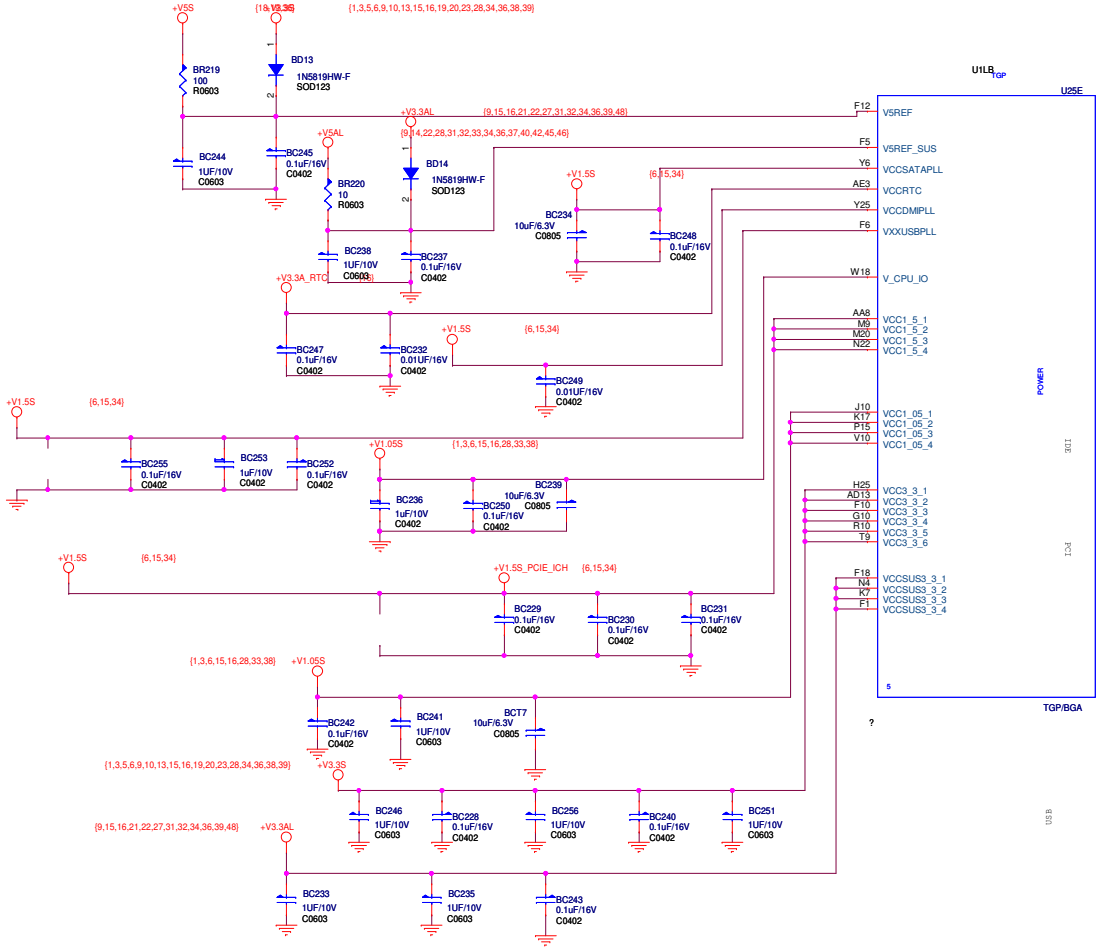

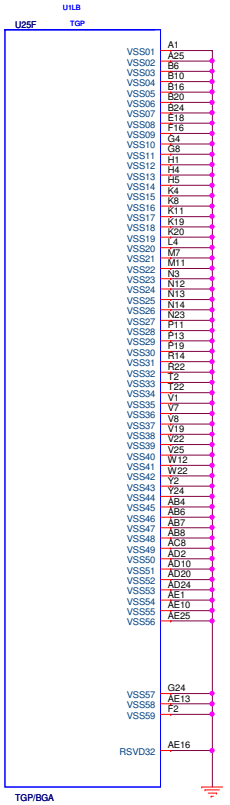

Title	<Title>	
Size C	Document Number <Doc>	Rev <RevCode>
Date: Monday, January 17, 2011	Sheet 17 of 44	

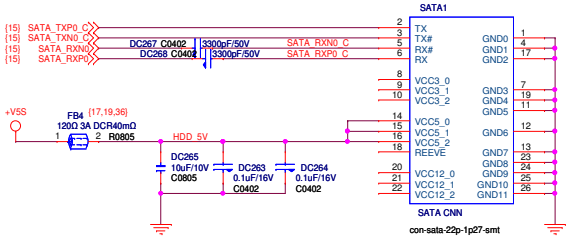

Title	<Title>	
Size C	Document Number <Doc>	Rev 2
Date: Monday, January 17, 2011	Sheet 18 of 44	

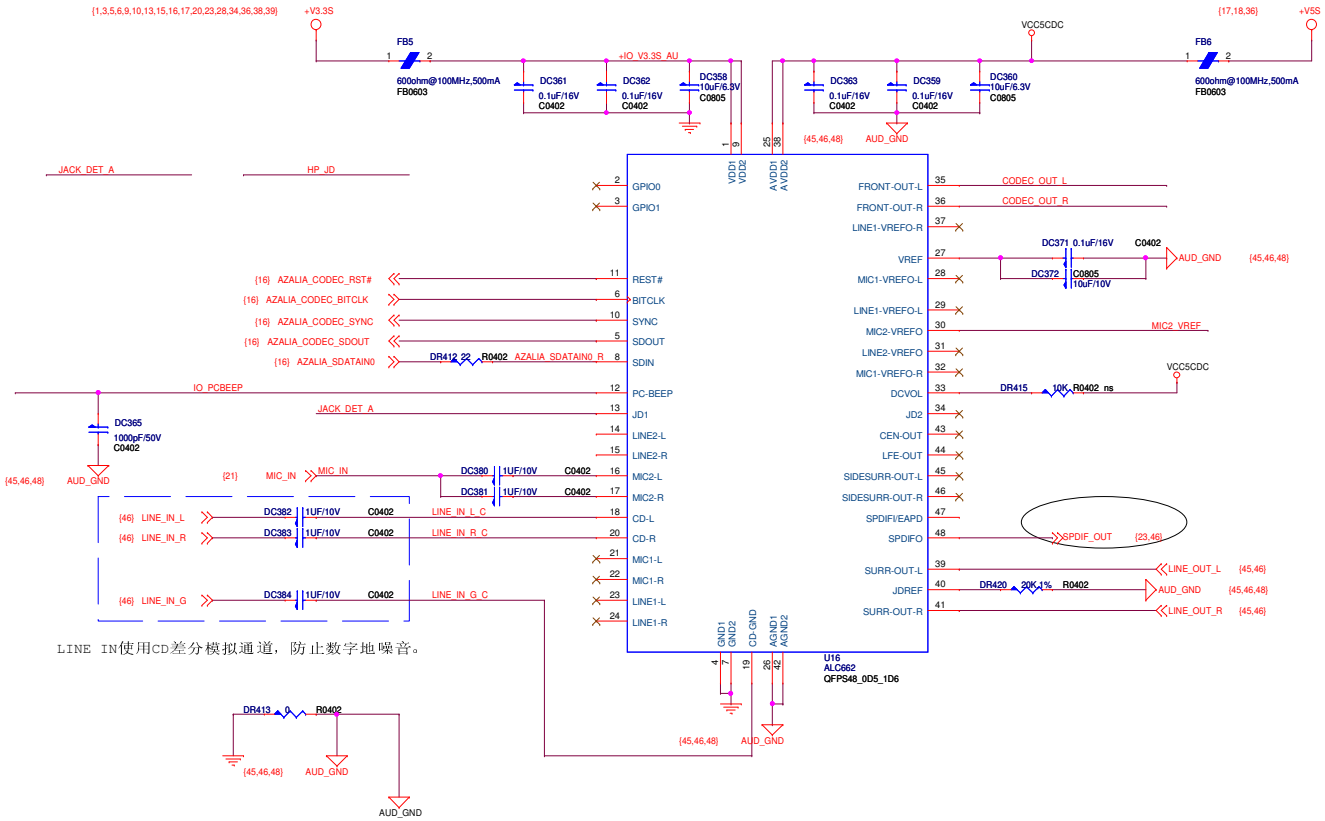

LINE IN使用CD差分模拟通道，防止数字地噪音。

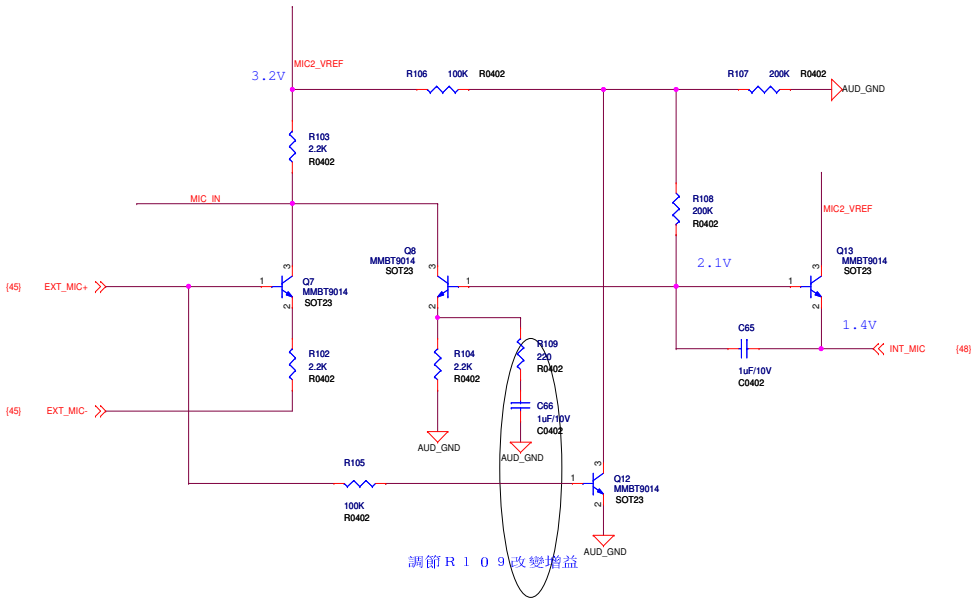

調節R109改變增益

Title	<Title>		
Size C	Document Number <Doc>		Rev <RevCode>
Date: Monday, January 17, 2011	Sheet 19 of 44		

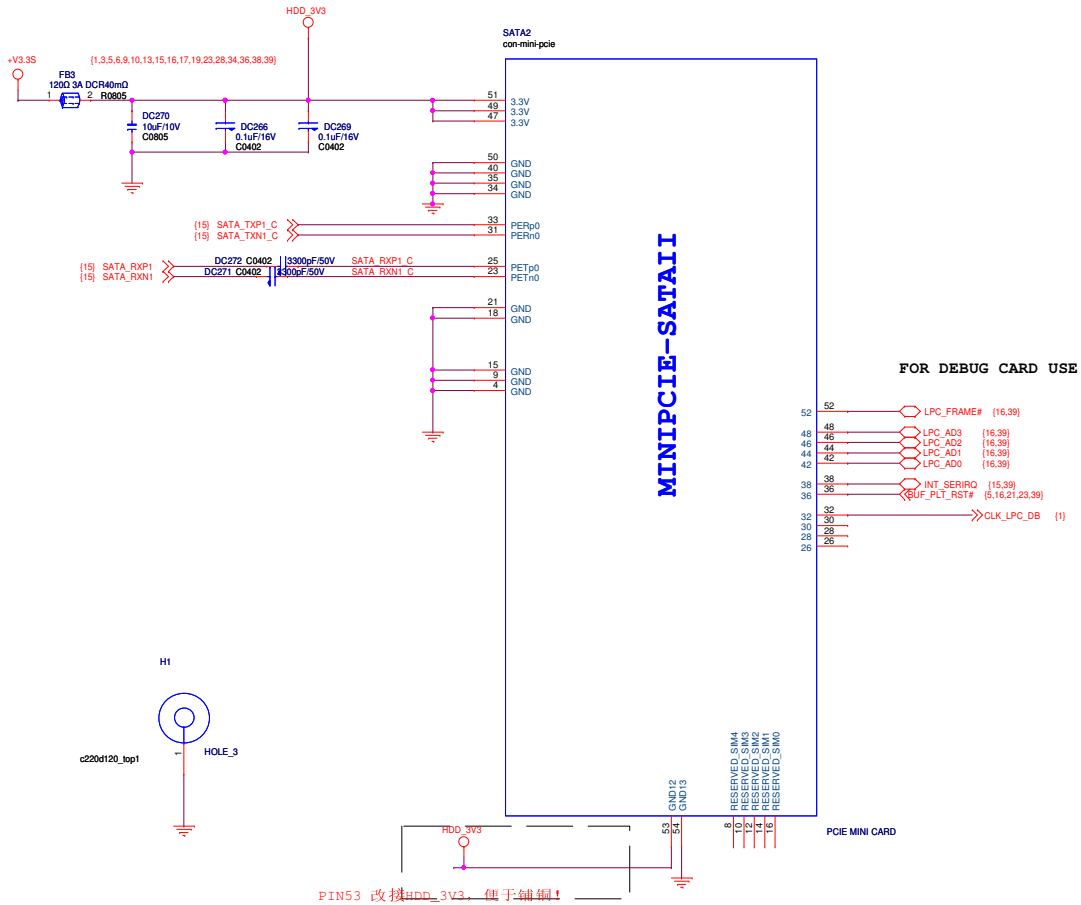

Title	<Title>	
Size C	Document Number <Doc>	Rev <RevCode>
Date: Monday, January 17, 2011	Sheet 20 of 44	

+V3.3v:Max 1.6A

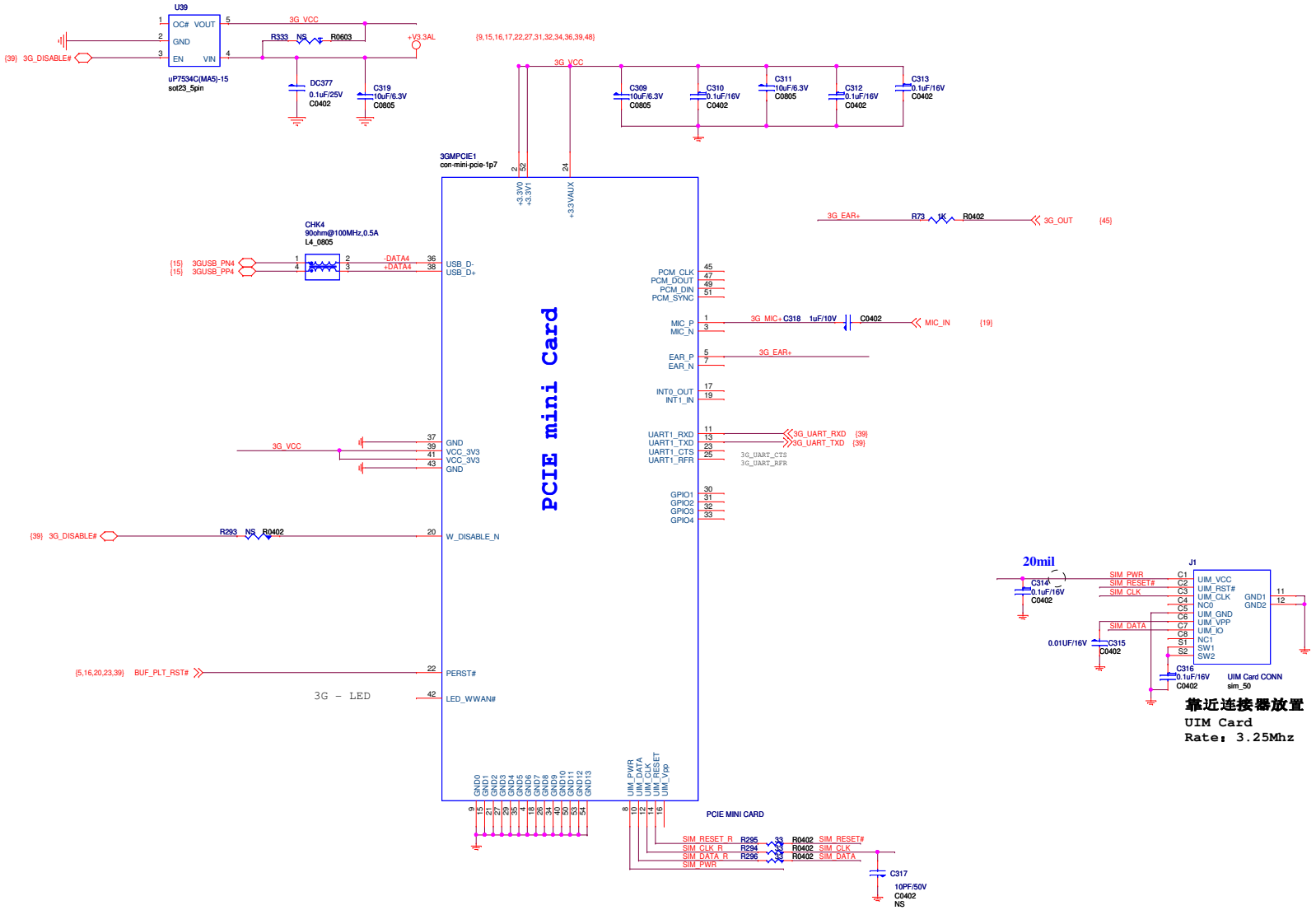

Title	<Title>	
Size C	Document Number <Doc>	Rev <RevCode>
Date: Monday, January 17, 2011	Sheet 21 of 44	

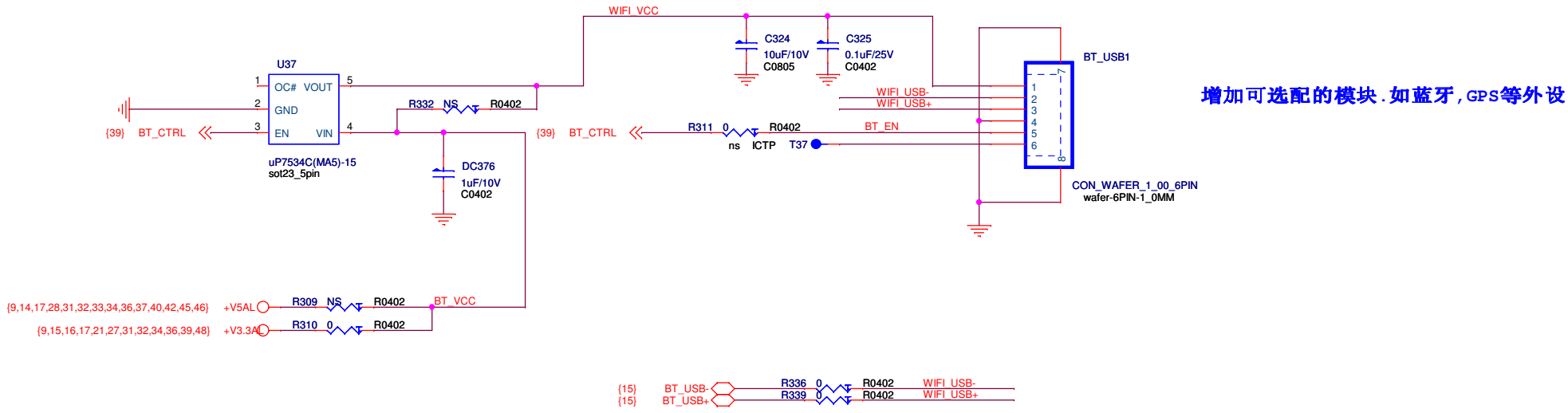

Title	<Title>	
Size B	Document Number <Doc>	Rev <RevCode>
Date: Monday, January 17, 2011	Sheet 22 of 44	

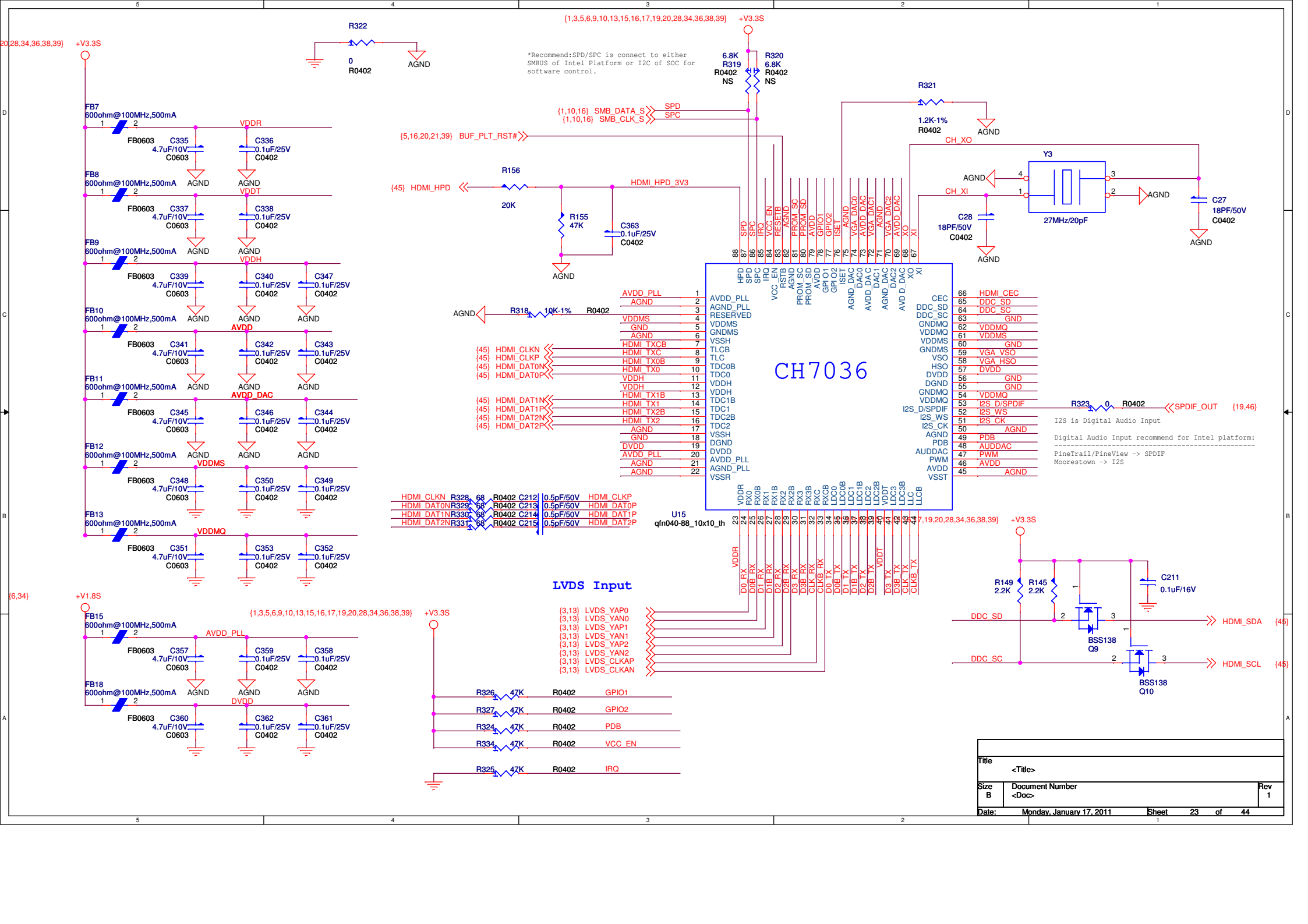
CH7036
U15
qfn040-88_10x10_th
LVDS Input
*Recommend:SPD/SPC is connect to either SMBUS of Intel Platform or I2C of SOC for software control.
I2S is Digital Audio Input
Digital Audio Input recommend for Intel platform:
PineTrail/PineView -> SPDIF
Moorestown -> I2S
Title
<Title>
Size B
Document Number
<Doc>
Rev 1
Date: Monday, January 17, 2011
Sheet 23 of 44

BLANK

Title: <Title>		
Size: B	Document Number: <Doc>	Rev: 1
Date: Monday, January 17, 2011	Sheet 24 of 44	

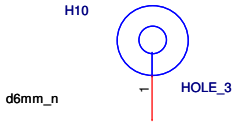

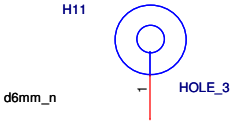

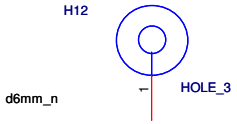

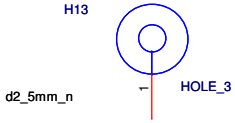

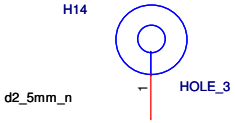

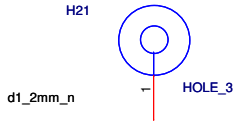

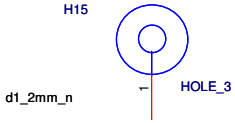

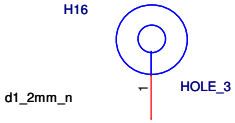

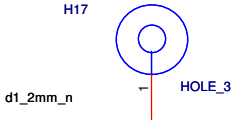

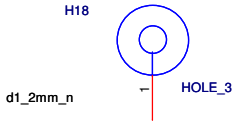

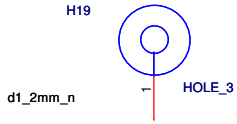

Title: <Title>		
Size: B	Document Number: <Doc>	Rev: <RevCode>
Date: Monday, January 17, 2011	Sheet 25 of 44	

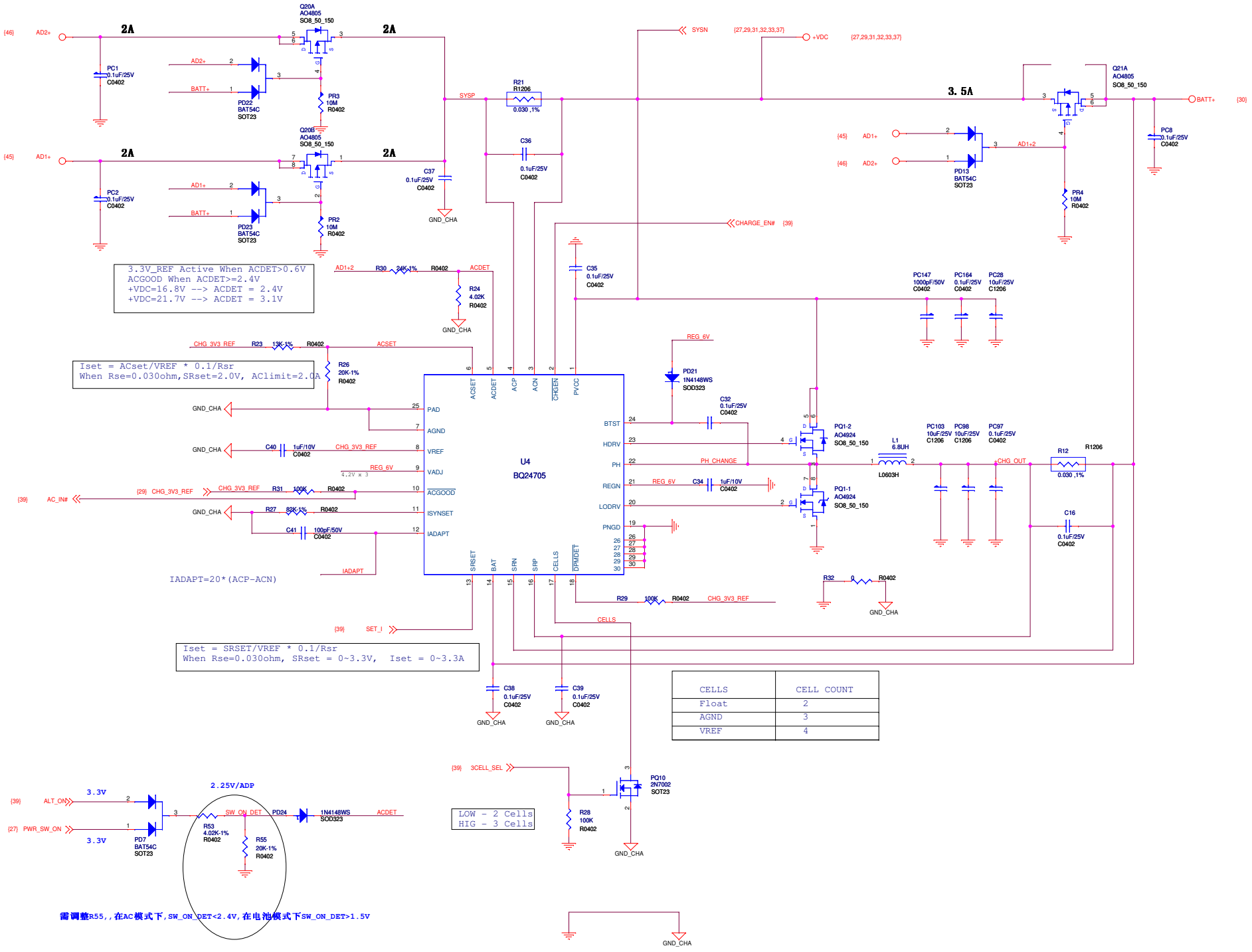

Title	<Title>
Size C	Document Number <Doc> Rev 1
Date: Monday, January 17, 2011	Sheet 26 of 44

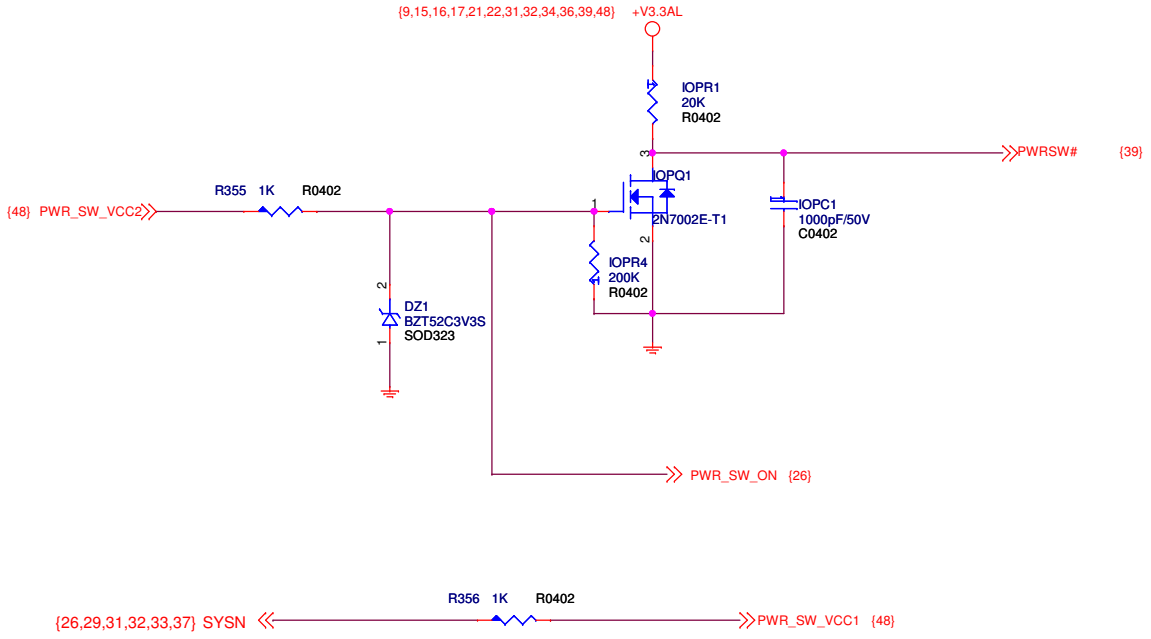

Title	<Title>	
Size B	Document Number <Doc>	Rev <RevCode>
Date: Monday, January 17, 2011	Sheet 27 of 44	

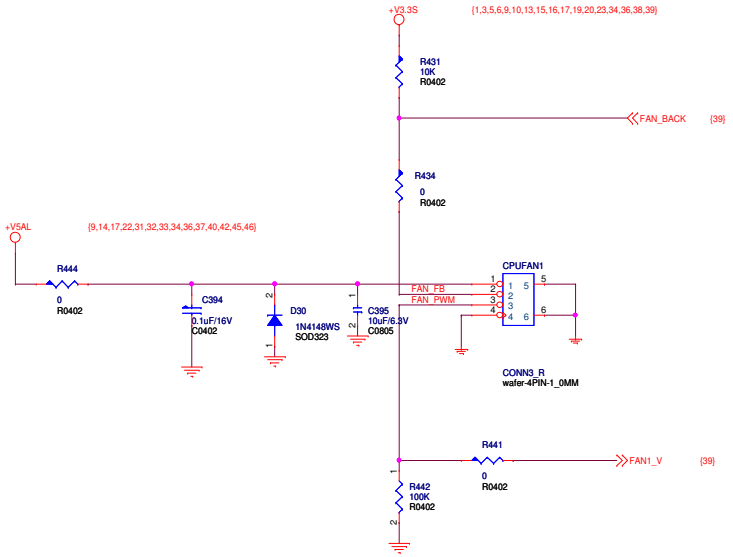

V14

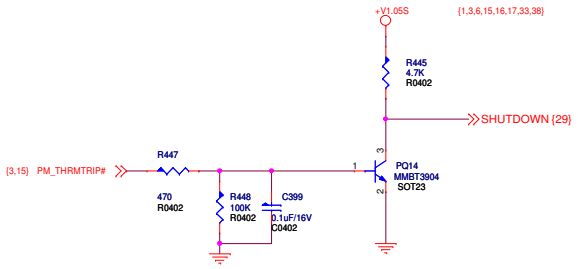

Title	<Title>	
Size C	Document Number <Doc>	Rev <RevCode>
Date: Monday, January 17, 2011	Sheet 28 of 44	

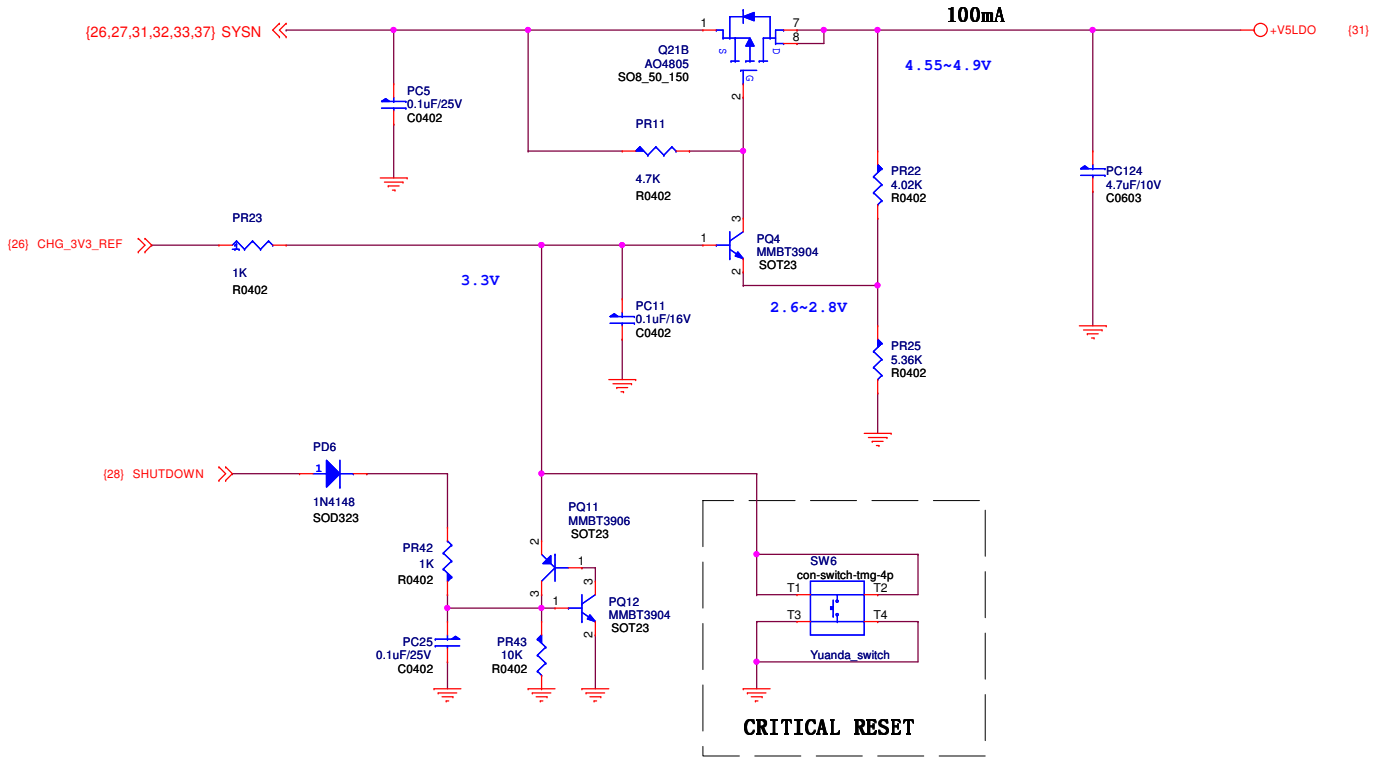

Title	<Title>	
Size A3	Document Number <Doc>	Rev <RevCode>
Date: Monday, January 17, 2011	Sheet 29 of 44	

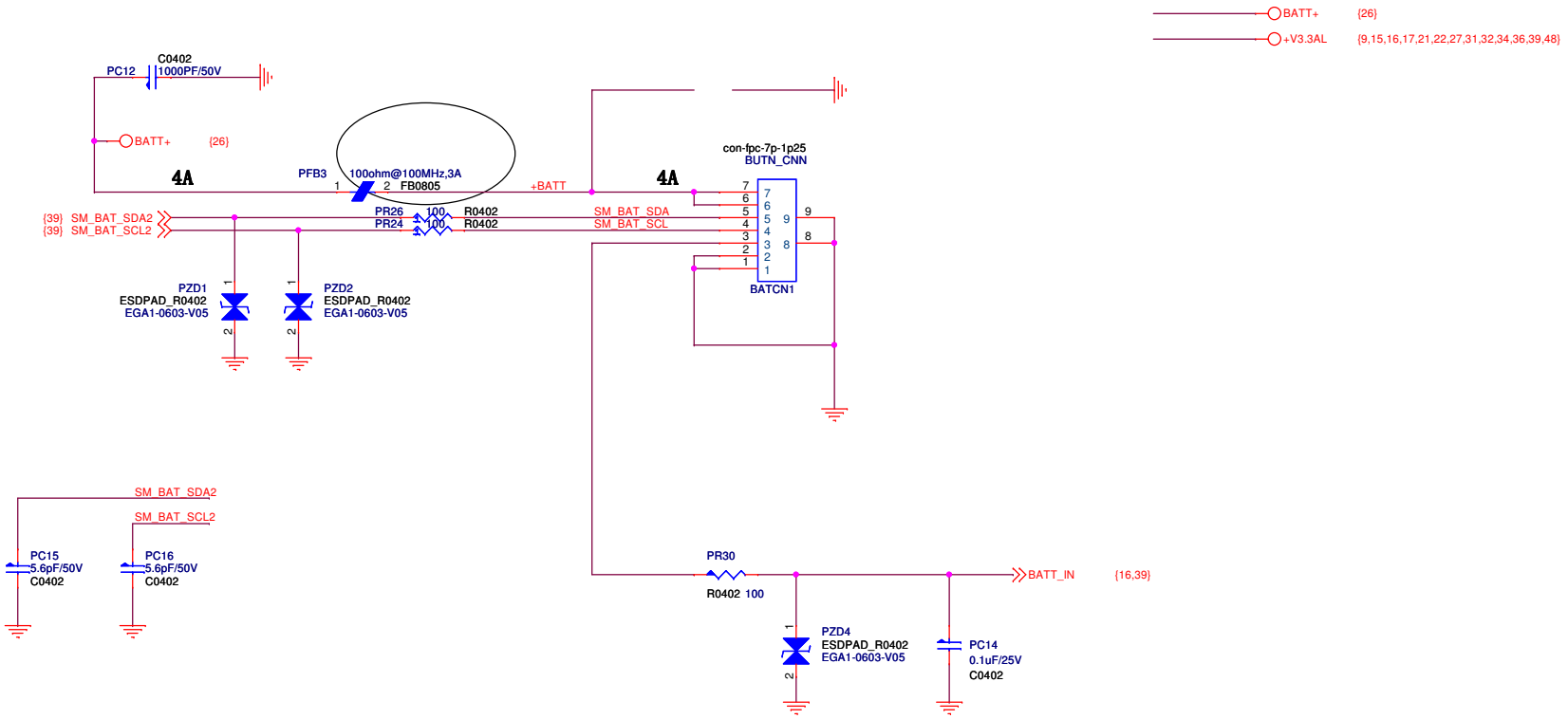

Title <Title>		
Size A3	Document Number <Doc>	Rev <RevCode>
Date: Monday, January 17, 2011	Sheet 30 of 44	

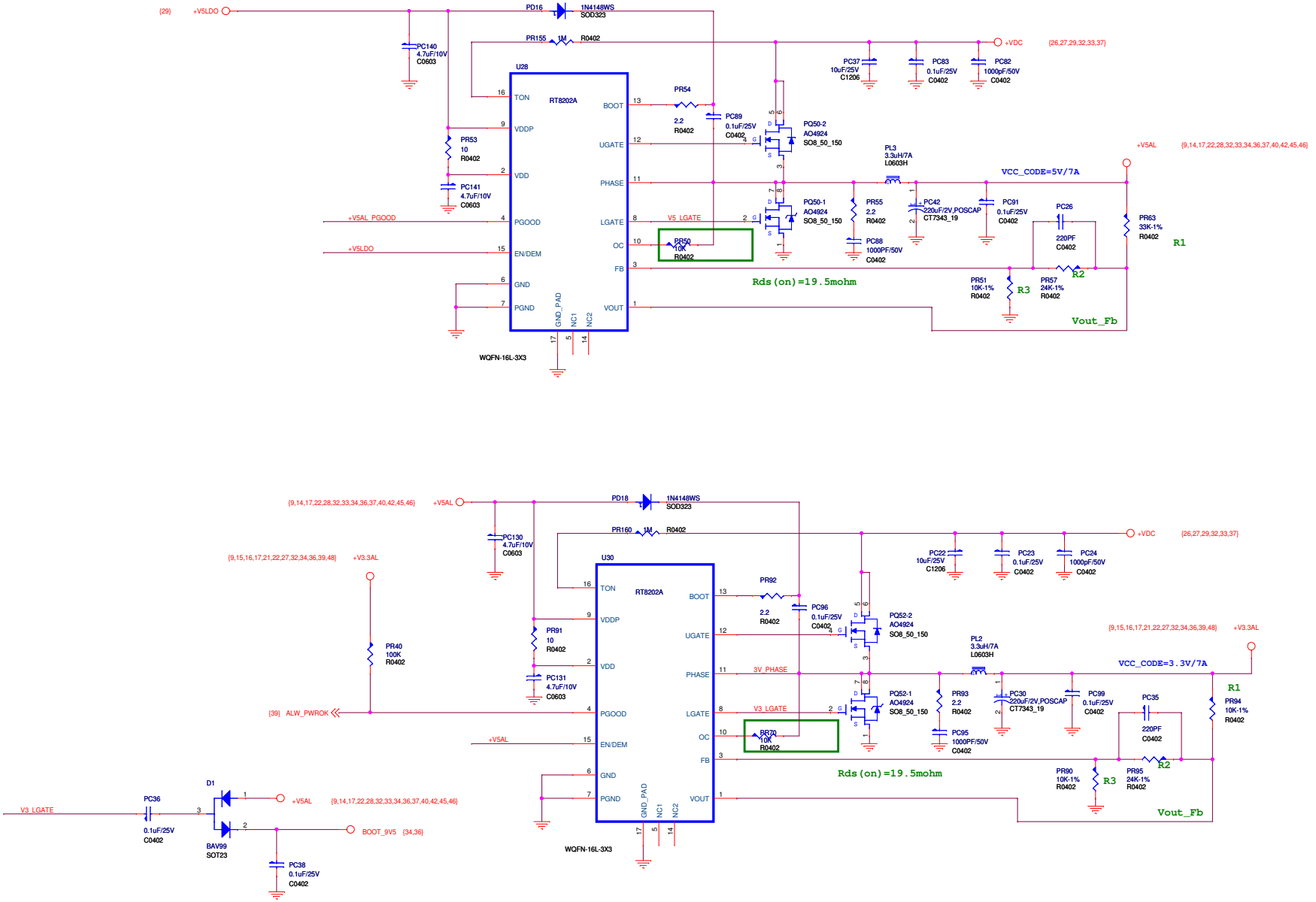

Title	<Title>	
Size C	Document Number <Doc>	Rev
Date: Wednesday, August 17, 2011	Sheet 31 of 44	

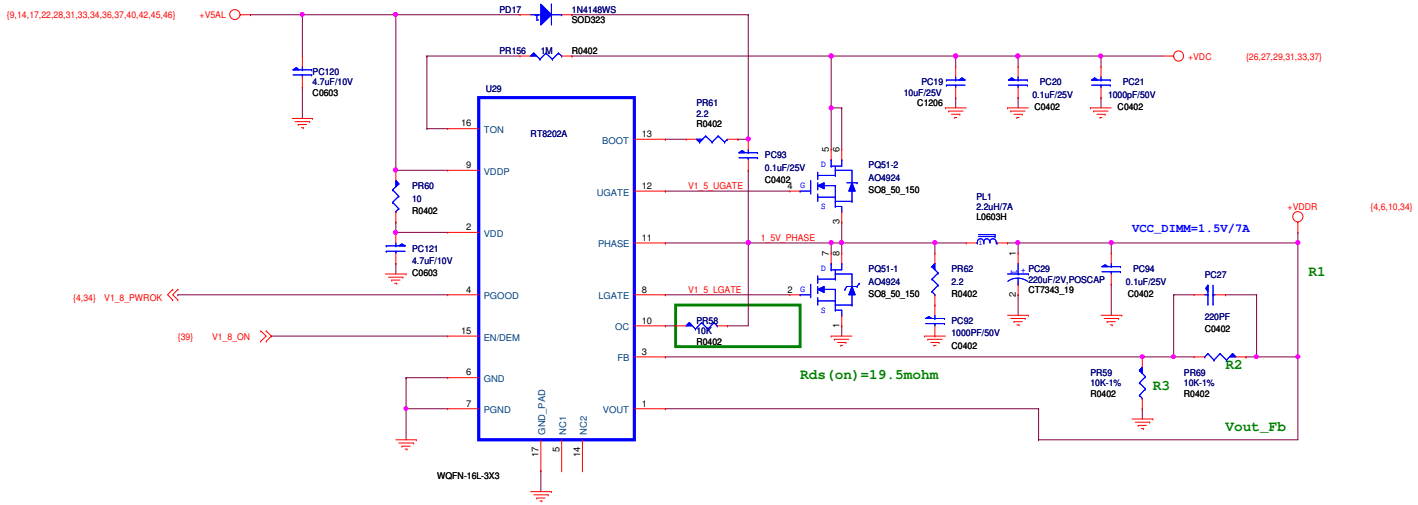

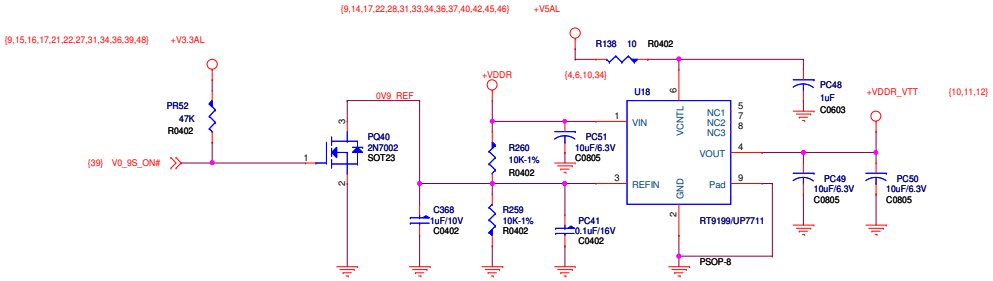

Title	<Title>	
Size C	Document Number <Doc>	Rev
Date: Wednesday, August 17, 2011	Sheet 32 of 44	

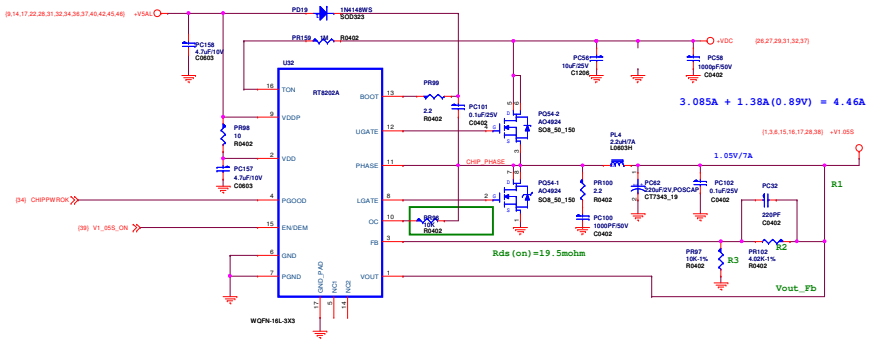

Title	<Title>		
Size: D	Document Number: <Doc>		Rev
Date: Wednesday, August 17, 2011	Sheet 33 of 44		

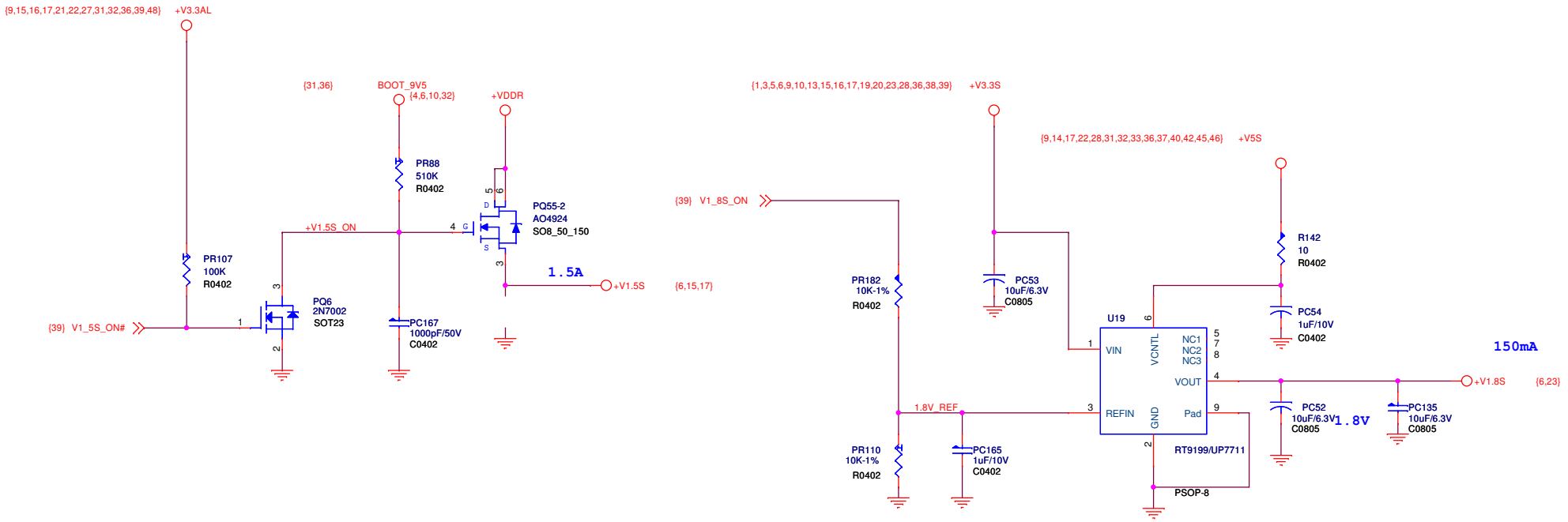

Power Good Logic CIRCUIT

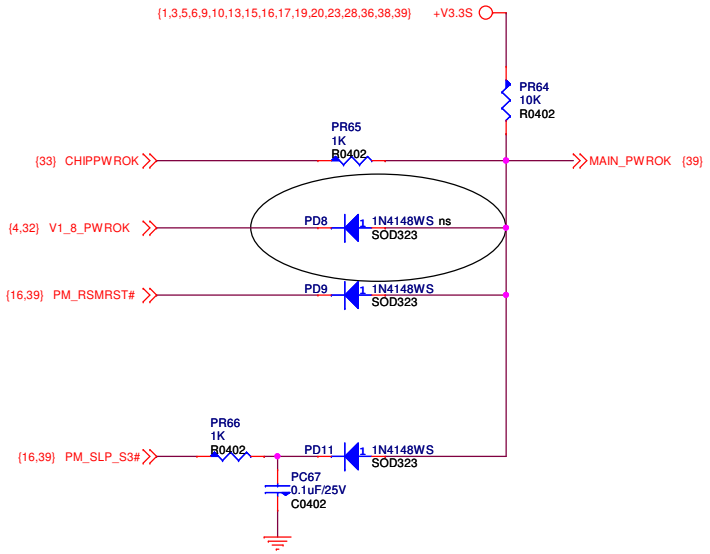

Title	<Title>	
Size A3	Document Number <Doc>	Rev <RevCode>
Date: Monday, January 17, 2011	Sheet 34 of 44	

BLANK

Title	<Title>	
Size A3	Document Number <Doc>	Rev <RevCode>
Date: Monday, January 17, 2011	Sheet 35 of 44	

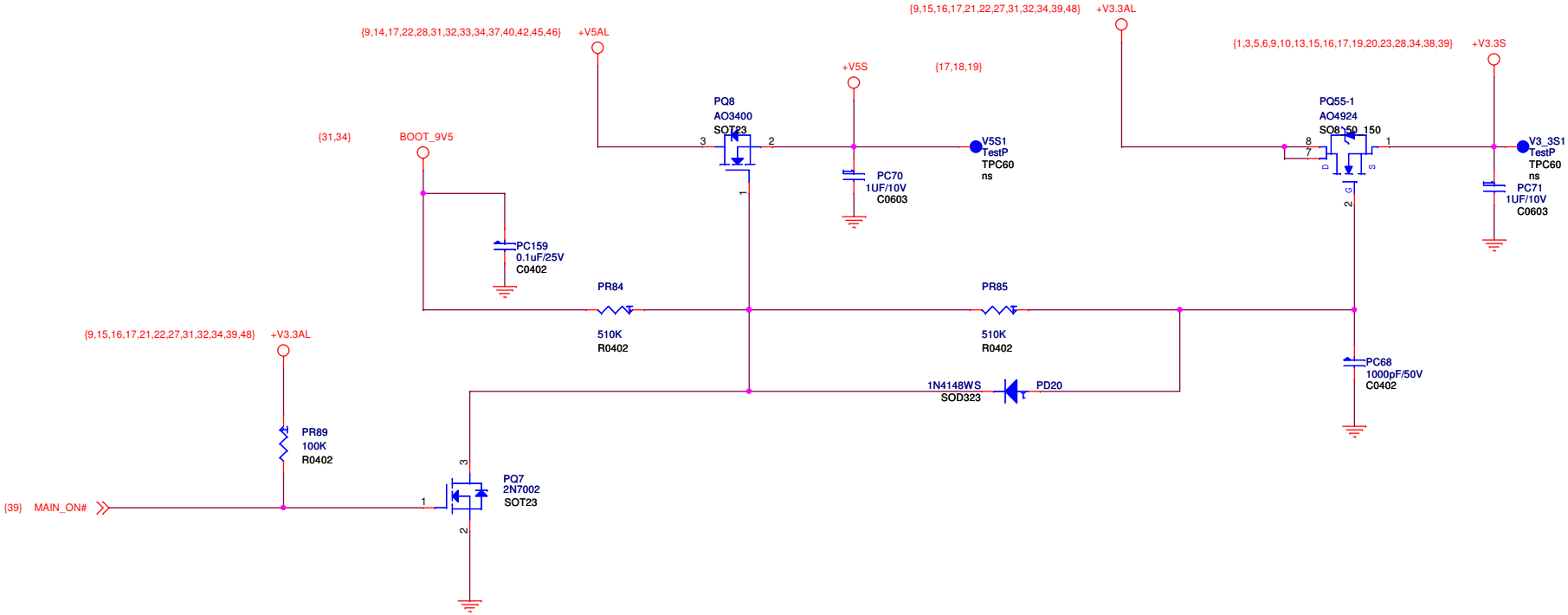

Title	<Title>	
Size A3	Document Number <Doc>	Rev <RevCode>
Date: Monday, January 17, 2011	Sheet 36 of 44	

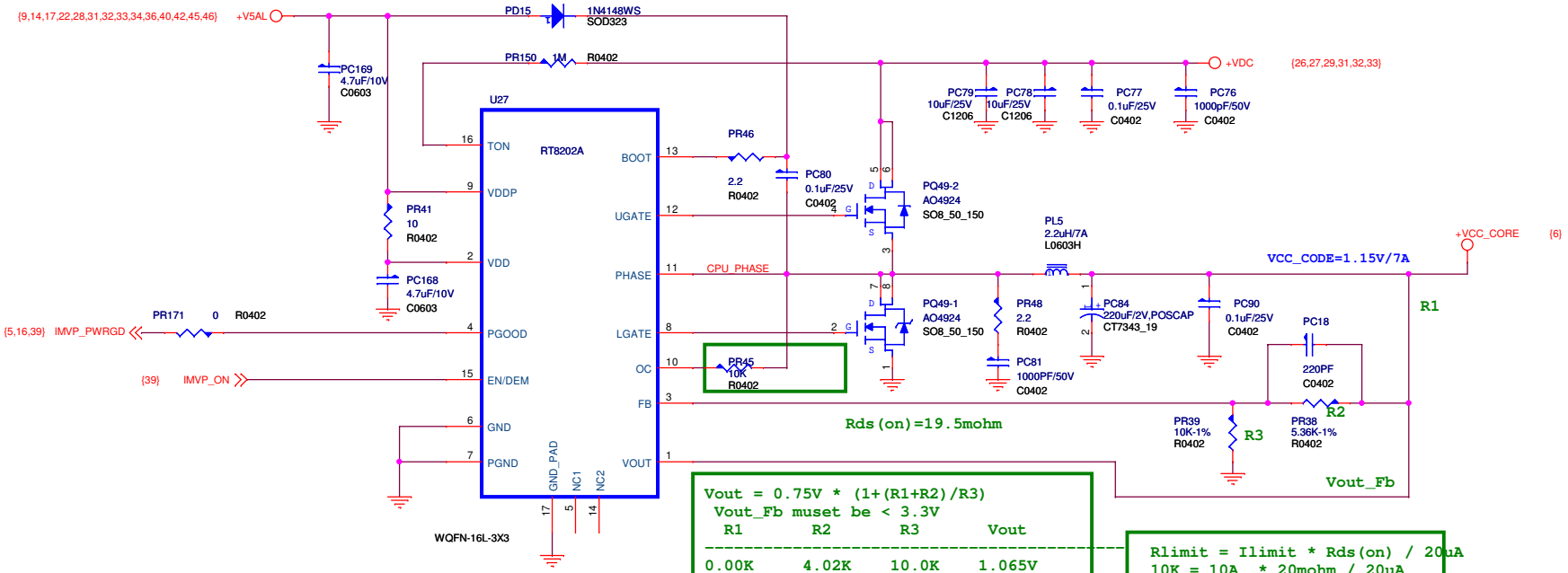

Title	<Title>	
Size: Custom	Document Number: <Doc>	Rev: <RevCode>
Date: Monday, January 17, 2011	Sheet 37 of 44	

{1,3,6,15,16,17,28,33} +V1.05S

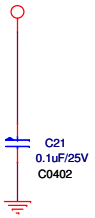

{1,3,5,6,9,10,13,15,16,17,19,20,23,28,34,36,39} +V3.3S

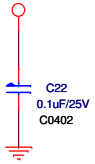

Title	<Title>	
Size: Custom	Document Number: <Doc>	Rev
Date: Monday, January 17, 2011	Sheet 38 of 44	

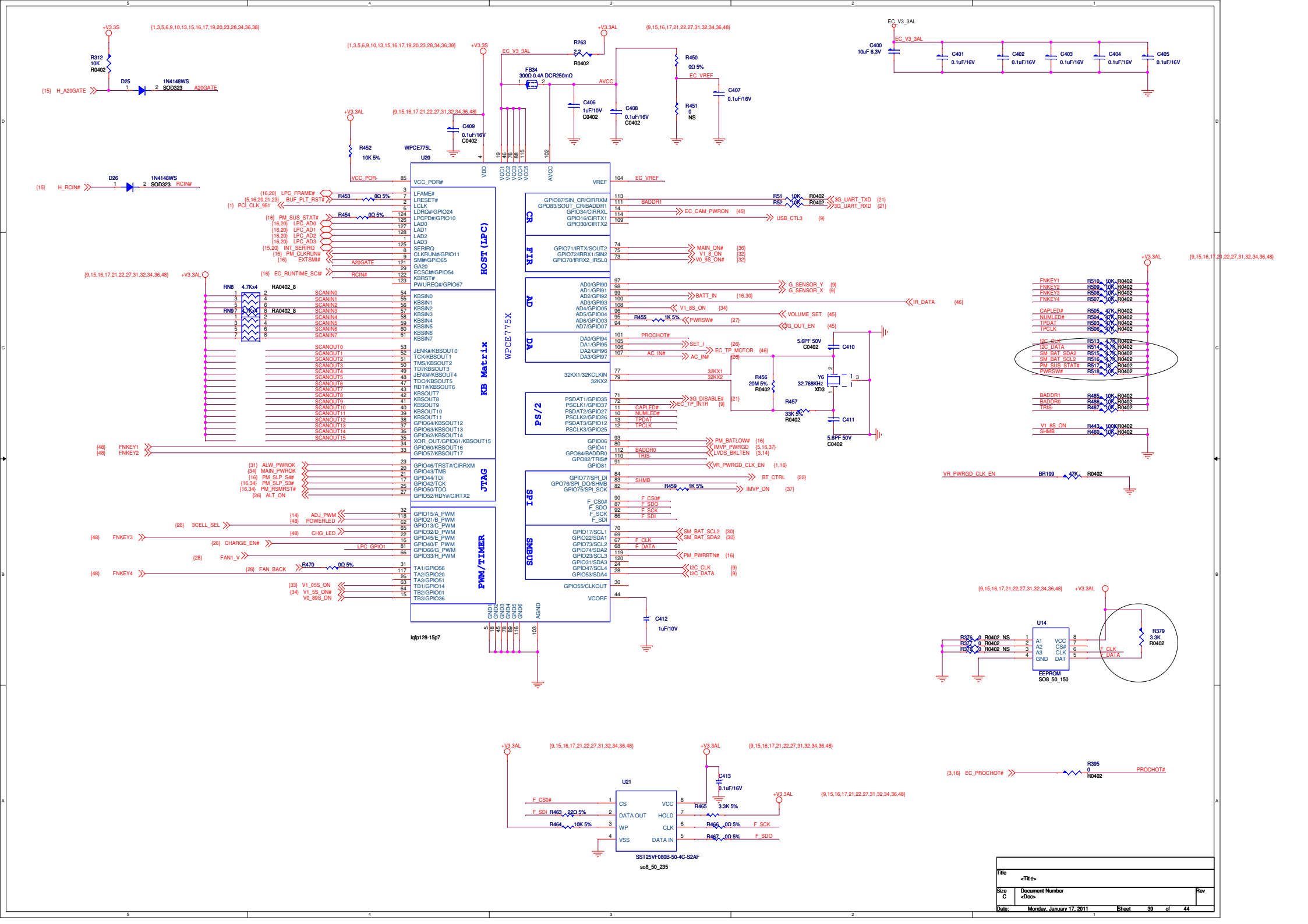
WPCE775X
U20
lqfp128-15p7
HOST (LPC)
KB Matrix
JTAG
PWM/TIMER
PS/2
SMBUS
SPI
CR
FIR
AD
DA
WPCE775L
VCC_POR#
VREF
LFAME#
LRESET#
LCLK
LDRQ#/GPIO24
LPCPD#/GPIO10
LAD0
LAD1
LAD2
LAD3
SERIRQ
CLKRUN#/GPIO11
SMI#/GPIO65
GA20
ECSCI#/GPIO54
KBRST#
PWUREQ#/GPIO67
KBSIN0
KBSIN1
KBSIN2
KBSIN3
KBSIN4
KBSIN5
KBSIN6
KBSIN7
JENK#/KBSOUT0
TCK/KBSOUT1
TMS/KBSOUT2
TDI/KBSOUT3
JENI0#/KBSOUT4
TDO/KBSOUT5
RDT#/KBSOUT6
KBSOUT7
KBSOUT8
KBSOUT9
KBSOUT10
KBSOUT11
KBSOUT12
KBSOUT13
KBSOUT14
XOR_OUT/GPIO61/KBSOUT15
GPIO60/KBSOUT16
GPIO57/KBSOUT17
GPIO46/TRST#/CIRRXM
GPIO43/TMS
GPIO44/TDI
GPIO42/TCK
GPIO50/TDO
GPIO52/RDY#/CIRTX2
GPIO15/A_PWM
GPIO21/B_PWM
GPIO13/C_PWM
GPIO32/D_PWM
GPIO45/E_PWM
GPIO40/F_PWM
GPIO66/G_PWM
GPIO33/H_PWM
TA1/GPIO56
TA2/GPIO20
TA3/GPIO51
TB1/GPIO14
TB2/GPIO01
TB3/GPIO36
GPIO87/SIN_CR/CIRRXM
GPIO83/SOUT_CR/BADDR1
GPIO34/CIRRXL
GPIO16/CIRTX1
GPIO30/CIRTX2
GPIO71/IRTX/SOUT2
GPIO72/IRRX1/SIN2
GPIO70/IRRX2_IRSL0
AD0/GPI90
AD1/GPI91
AD2/GPI92
AD3/GPI93
AD4/GPIO05
AD5/GPIO04
AD6/GPIO03
AD7/GPIO07
DA0/GPI94
DA1/GPI95
DA2/GPI96
DA3/GPI97
32KX1/32KCLKIN
32KX2
PSDAT1/GPIO35
PSCLK1/GPIO37
PSDAT2/GPIO27
PSCLK2/GPIO26
PSDAT3/GPIO12
PSCLK3/GPIO25
GPIO06
GPIO41
GPO84/BADDR0
GPO82/TRIS#
GPIO81
GPIO77/SPI_DI
GPO76/SPI_DO/SHMB
GPIO75/SPI_SCK
F_CS0#
F_SDO
F_SCK
F_SDI
GPIO17/SCL1
GPIO22/SDA1
GPIO73/SCL2
GPIO74/SDA2
GPIO23/SCL3
GPIO31/SDA3
GPIO47/SCL4
GPIO53/SDA4
GPIO55/CLKOUT
VCORF
AVCC
VDD
VCC1
VCC2
VCC3
VCC4
VCC5
GND1
GND2
GND3
GND4
GND5
GND6
AGND
R312 10K R0402
D25 1N4148WS SOD323
R452 10K 5%
D26 1N4148WS SOD323
R263 2.2 R0402
FB34 300Ω 0.4A DCR250mΩ
R450 0Ω 5% EC_VREF
R451 0 NS
C406 1uF/10V C0402
C407 0.1uF/16V
C408 0.1uF/16V C0402
C409 0.1uF/16V C0402
C412 1uF/10V
R453 0Ω 5%
R454 0Ω 5%
RN8 4.7Kx4 RA0402_8
RN9 4.7Kx4 RA0402_8
R455 1K 5%
R456 20M 5% R0402
R457 33K 5% R0402
Y6 32.768KHz XD3
C410 5.6PF 50V C0402
C411 5.6PF 50V C0402
R459 1K 5%
R470 0Ω 5%
R51 10K R0402
R52 10K R0402
C400 10uF 6.3V
C401 0.1uF/16V
C402 0.1uF/16V
C403 0.1uF/16V
C404 0.1uF/16V
C405 0.1uF/16V
R510 10K R0402
R509 10K R0402
R508 10K R0402
R507 10K R0402
R505 47K R0402
R504 47K R0402
R503 47K R0402
R506 47K R0402
R513 4.7K R0402
R514 4.7K R0402
R515 4.7K R0402
R516 4.7K R0402
R517 4.7K R0402
R518 10K R0402
R485 10K R0402
R486 10K R0402
R487 10K R0402
R443 100K R0402
R460 10K R0402
BR199 47K R0402
R376 0 R0402 NS
R377 0 R0402
R378 0 R0402 NS
U14 EEPROM SO8_50_150
R379 3.3K R0402
U21 SST25VF080B-50-4C-S2AF so8_50_235
R463 22Ω 5%
R464 10K 5%
R465 3.3K 5%
R466 0Ω 5%
R467 0Ω 5%
C413 0.1uF/16V
R395 0 R0402
Title <Title>
Size C
Document Number <Doc>
Rev
Date: Monday, January 17, 2011
Sheet 39 of 44

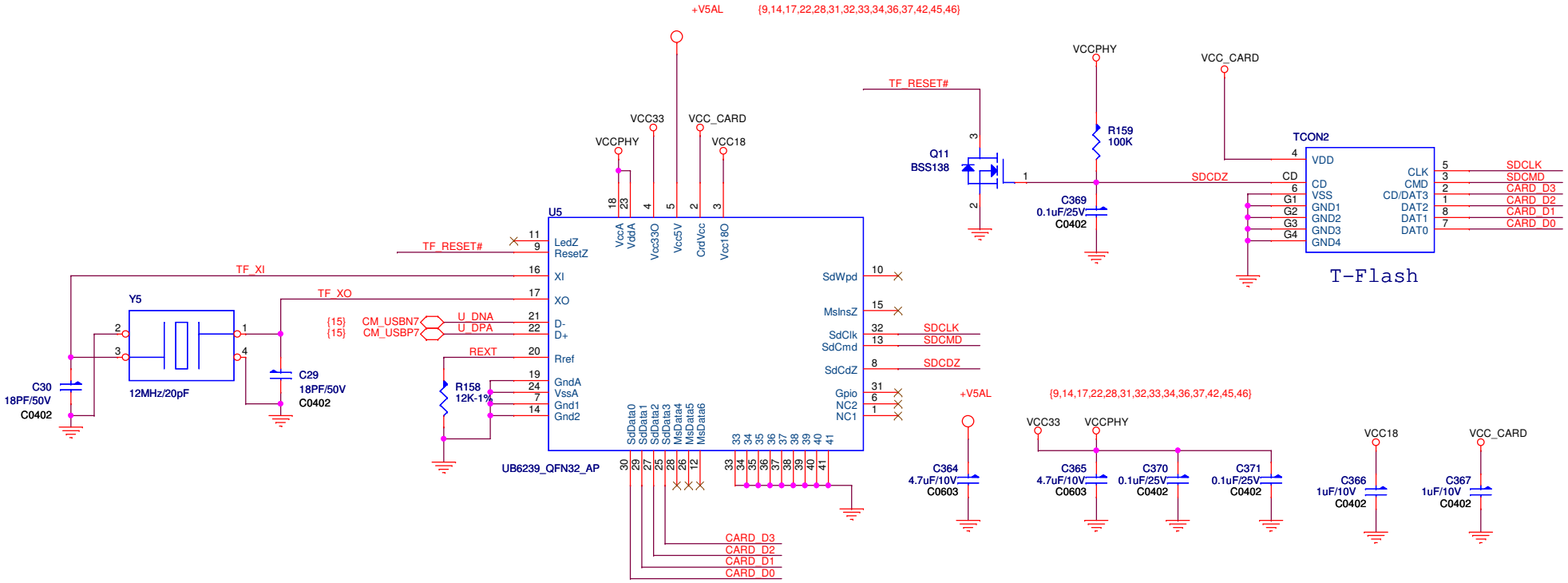

Title	<Title>	
Size B	Document Number <Doc>	Rev <RevCode>
Date: Monday, January 17, 2011	Sheet 40 of 44	

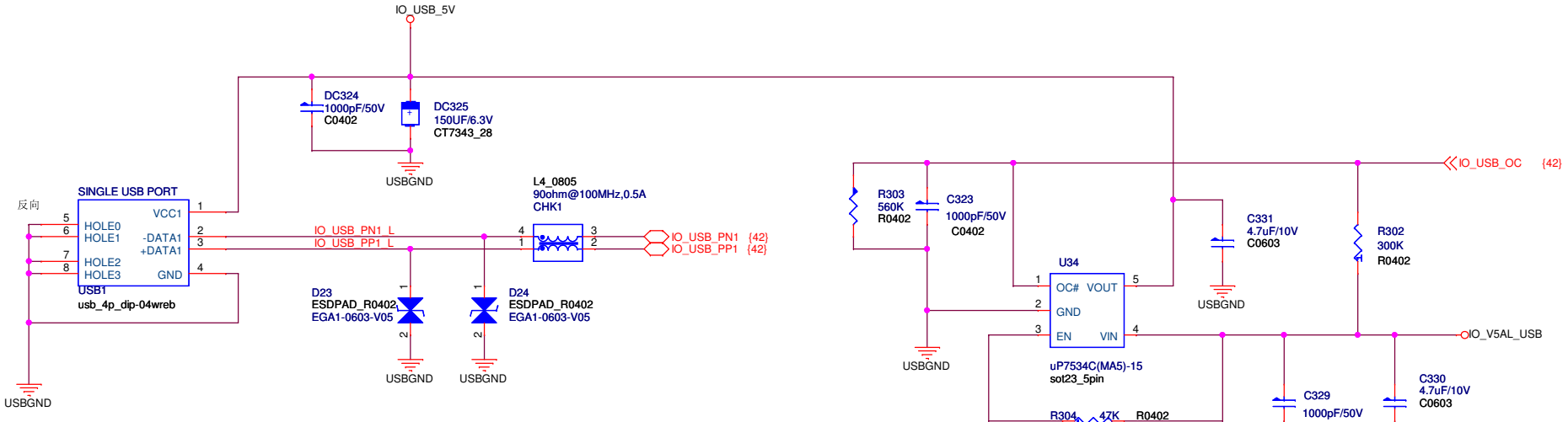

Keep USB2.0 Signal stub short

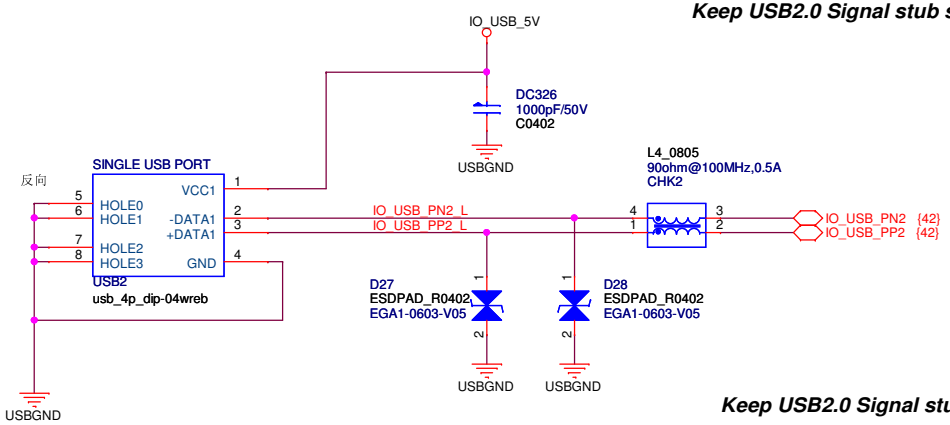

Keep USB2.0 Signal stub short

Title	<Title>	
Size B	Document Number <Doc>	Rev <RevCode>
Date: Monday, January 17, 2011	Sheet 41 of 50	

主板连接器

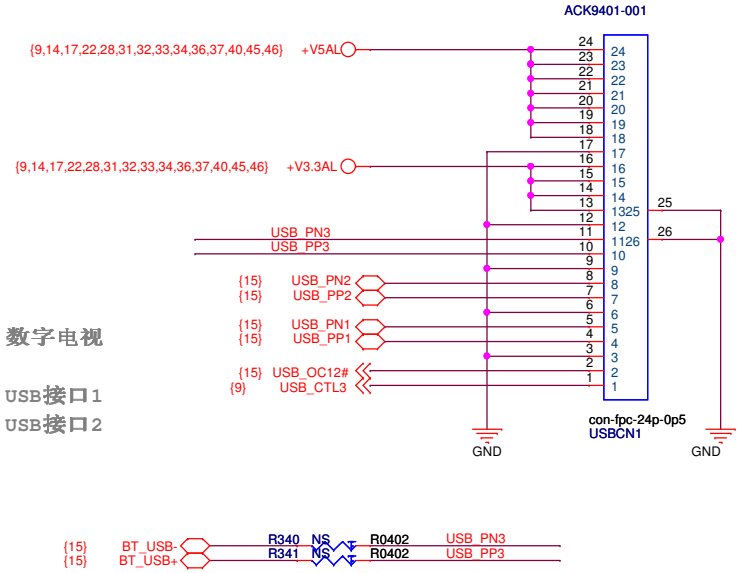

USB小板连接器

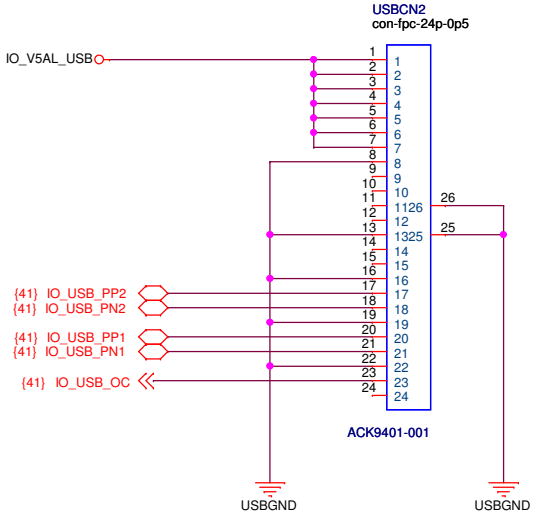

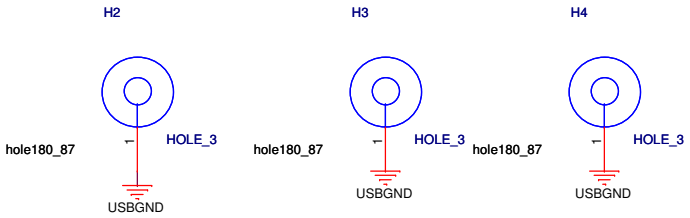

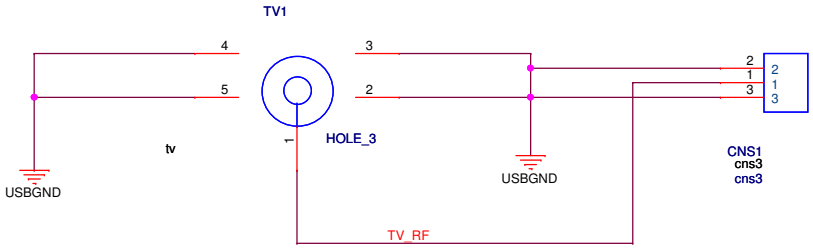

Title <Title>		
Size B	Document Number <Doc>	Rev <RevCode>
Date: Monday, January 17, 2011	Sheet 42 of 50	

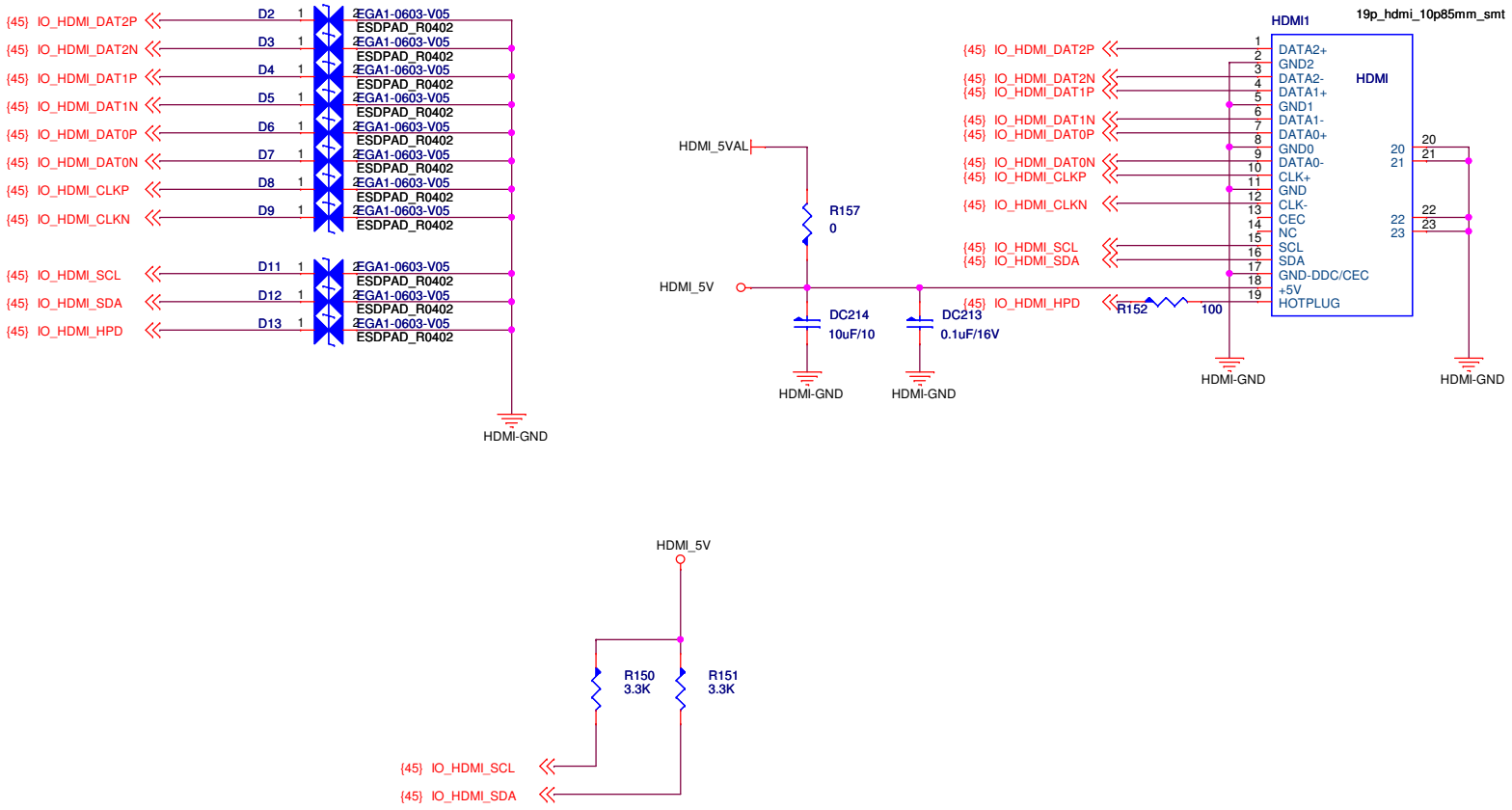

Title	<Title>		
Size B	Document Number <Doc>		Rev <RevCode>
Date: Monday, January 17, 2011		Sheet 43 of 50	

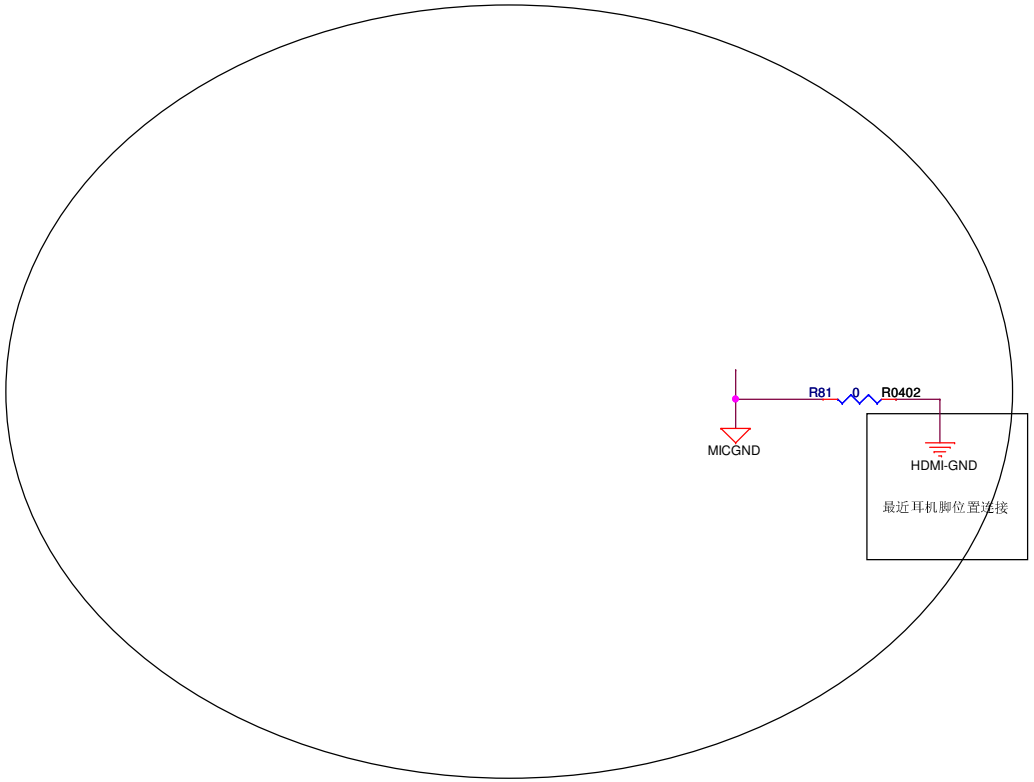

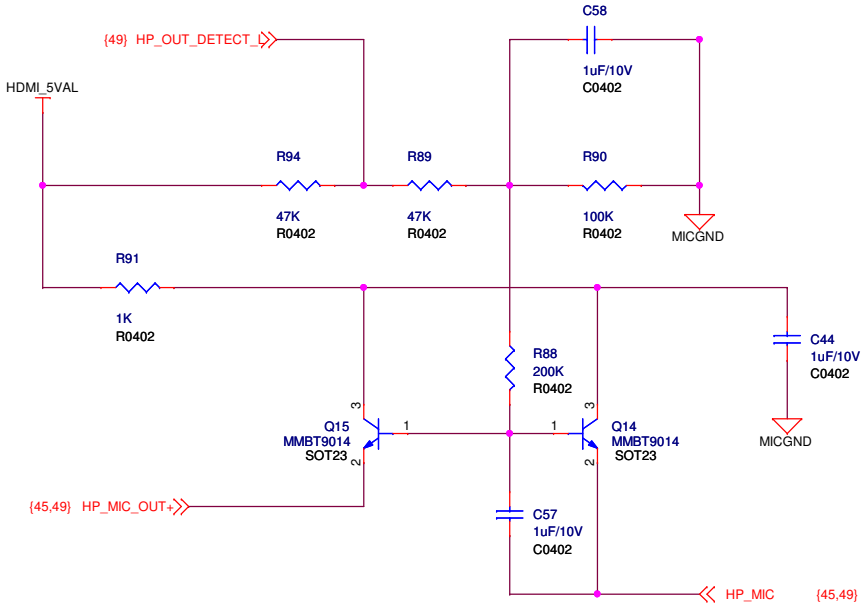

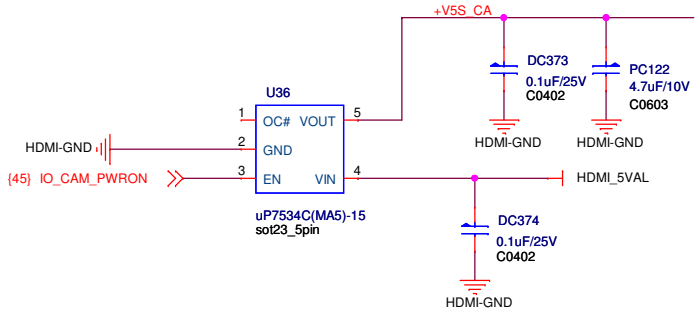

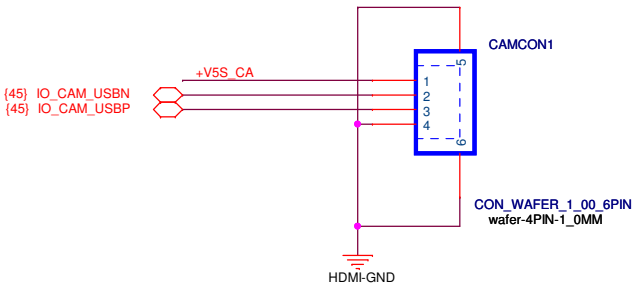

Title	<Title>	
Size B	Document Number <Doc>	Rev <RevCode>
Date: Monday, January 17, 2011	Sheet 44 of 50	

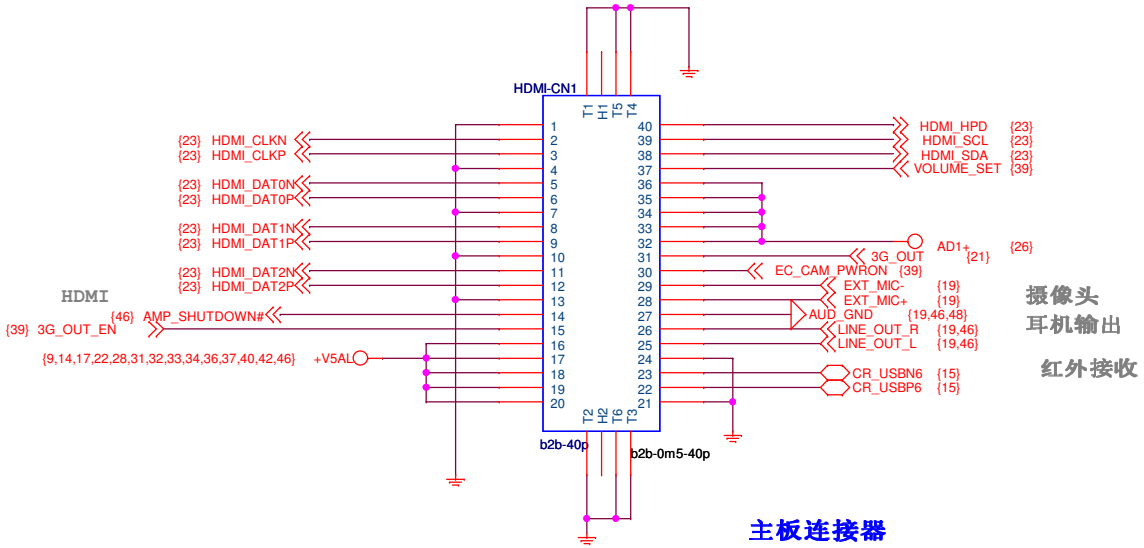

摄像头

耳机输出

红外接收

主板连接器

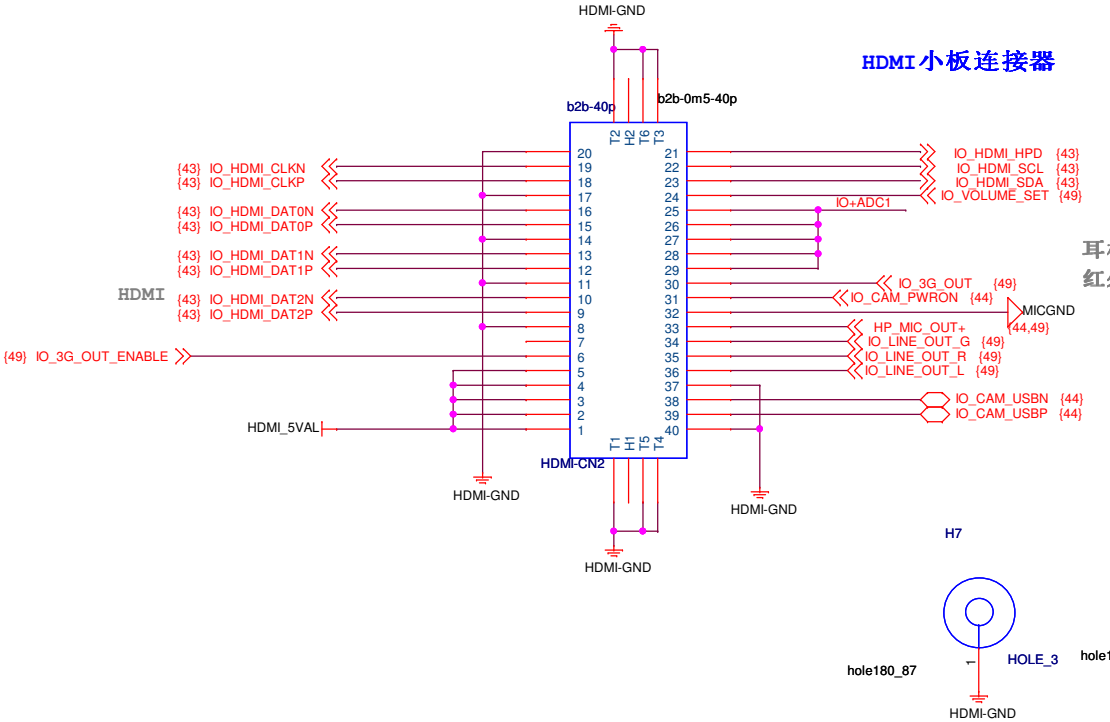

耳机输出

红外接收

摄像头

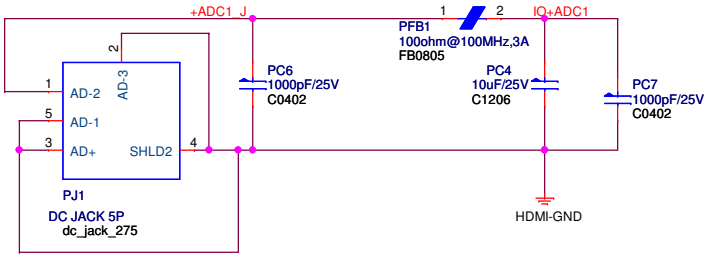

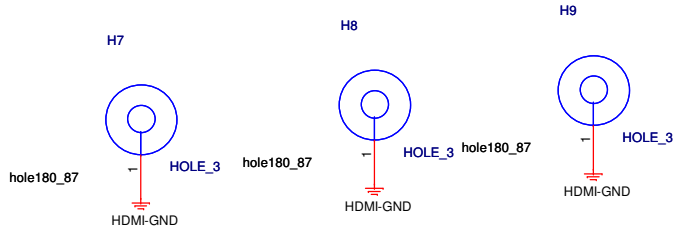

Title	<Title>	
Size B	Document Number <Doc>	Rev <RevCode>
Date: Monday, January 17, 2011	Sheet 45 of 50	

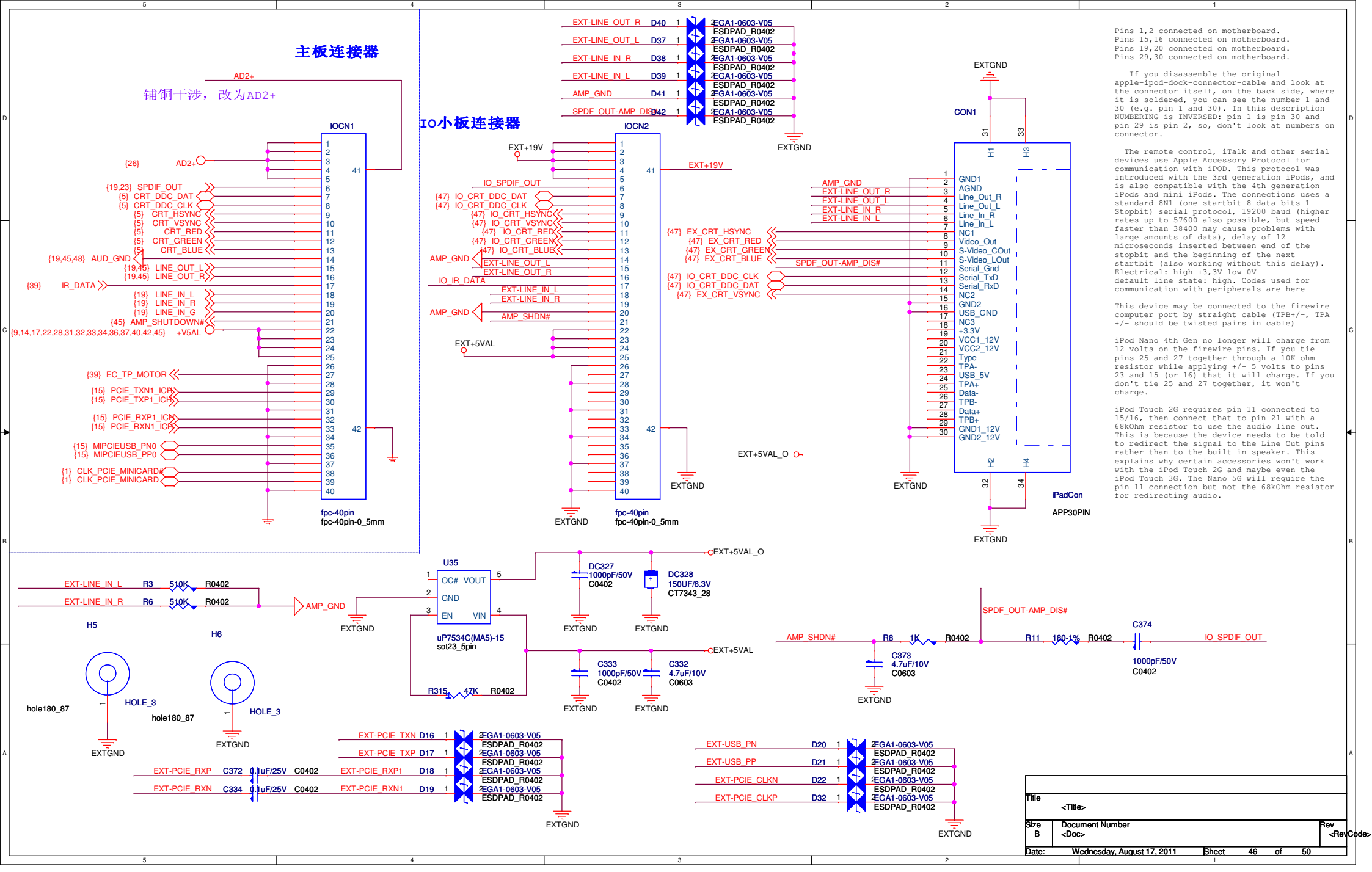
主板连接器
铺铜干涉，改为AD2+
AD2+
IOCN1
IO小板连接器
IOCN2
CON1
iPadCon
APP30PIN
fpc-40pin
fpc-40pin-0_5mm
EXTGND
EXT+19V
EXT+5VAL
EXT+5VAL_O
U35
uP7534C(MA5)-15
sot23_5pin
H5
H6
HOLE_3
hole180_87
Pins 1,2 connected on motherboard.
Pins 15,16 connected on motherboard.
Pins 19,20 connected on motherboard.
Pins 29,30 connected on motherboard.
If you disassemble the original apple-ipod-dock-connector-cable and look at the connector itself, on the back side, where it is soldered, you can see the number 1 and 30 (e.g. pin 1 and 30). In this description NUMBERING is INVERSED: pin 1 is pin 30 and pin 29 is pin 2, so, don't look at numbers on connector.
The remote control, iTalk and other serial devices use Apple Accessory Protocol for communication with iPOD. This protocol was introduced with the 3rd generation iPods, and is also compatible with the 4th generation iPods and mini iPods. The connections uses a standard 8N1 (one startbit 8 data bits 1 Stopbit) serial protocol, 19200 baud (higher rates up to 57600 also possible, but speed faster than 38400 may cause problems with large amounts of data), delay of 12 microseconds inserted between end of the stopbit and the beginning of the next startbit (also working without this delay). Electrical: high +3,3V low 0V default line state: high. Codes used for communication with peripherals are here
This device may be connected to the firewire computer port by straight cable (TPB+/-, TPA +/- should be twisted pairs in cable)
iPod Nano 4th Gen no longer will charge from 12 volts on the firewire pins. If you tie pins 25 and 27 together through a 10K ohm resistor while applying +/- 5 volts to pins 23 and 15 (or 16) that it will charge. If you don't tie 25 and 27 together, it won't charge.
iPod Touch 2G requires pin 11 connected to 15/16, then connect that to pin 21 with a 68kOhm resistor to use the audio line out. This is because the device needs to be told to redirect the signal to the Line Out pins rather than to the built-in speaker. This explains why certain accessories won't work with the iPod Touch 2G and maybe even the iPod Touch 3G. The Nano 5G will require the pin 11 connection but not the 68kOhm resistor for redirecting audio.
Title
<Title>
Size B
Document Number
<Doc>
Rev
<RevCode>
Date: Wednesday, August 17, 2011
Sheet 46 of 50

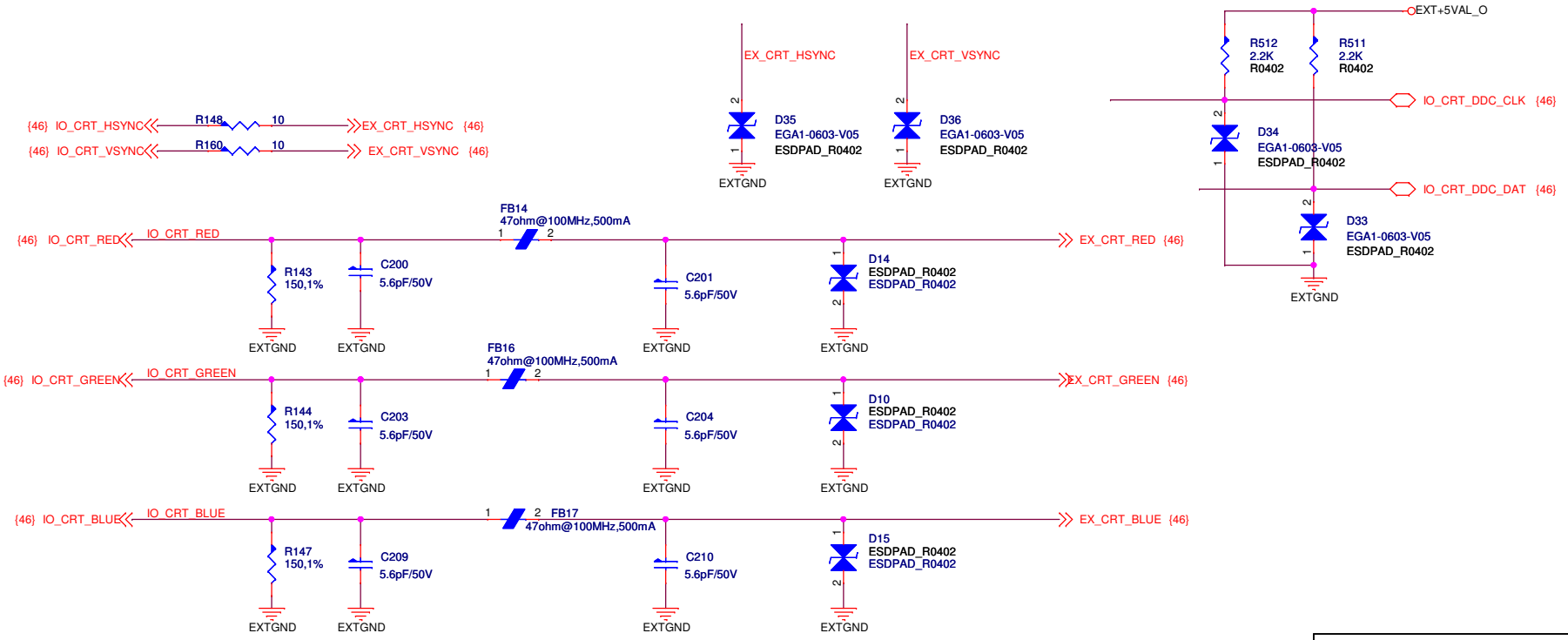

Title	<Title>	
Size B	Document Number <Doc>	Rev <RevCode>
Date: Monday, January 17, 2011	Sheet 47 of 50	

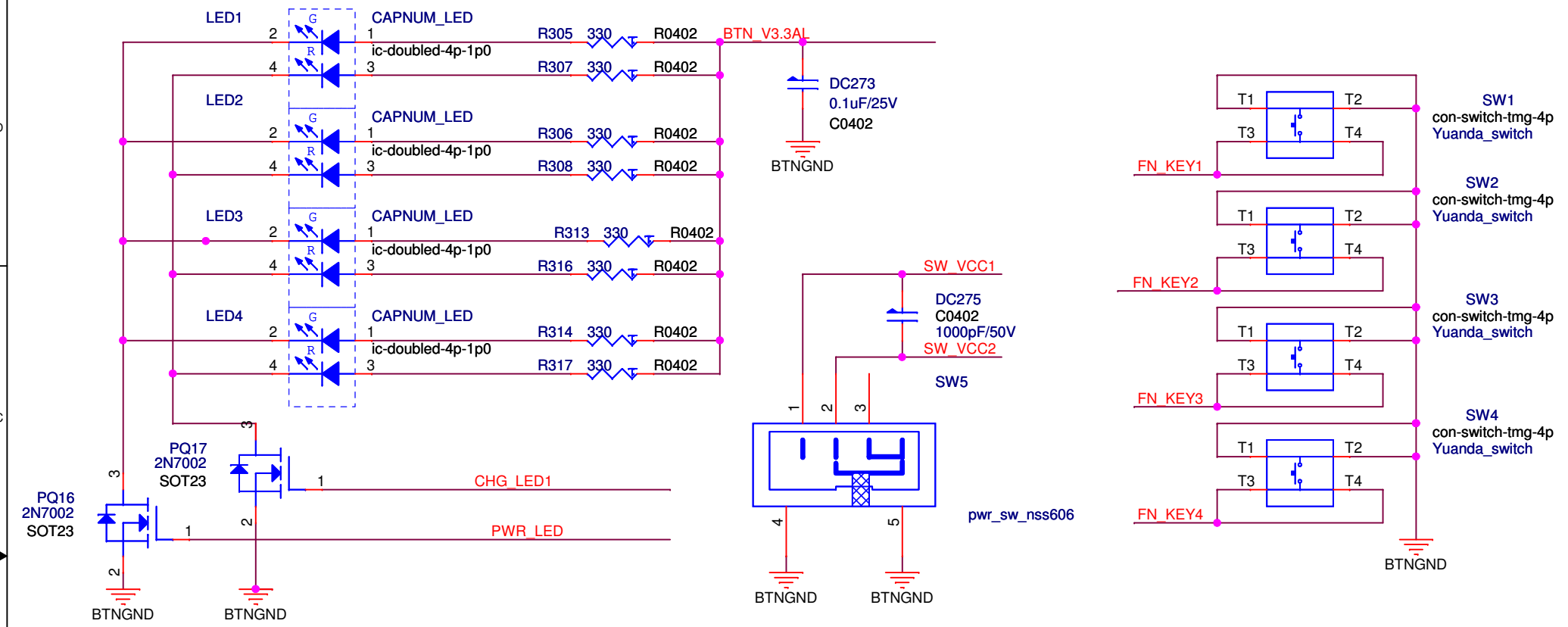

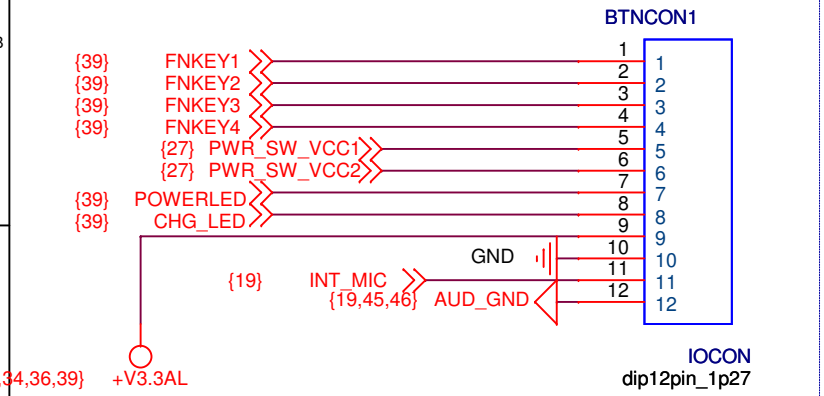

主板连接器

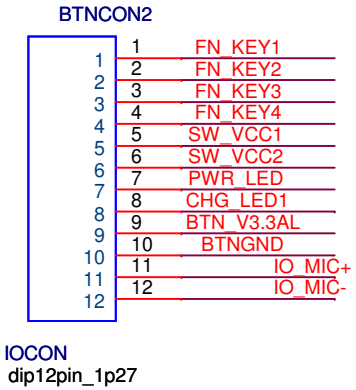

KEY小板连接器

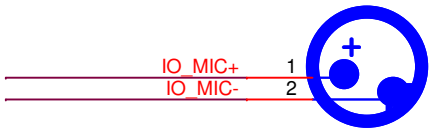

Title	<Title>	
Size A	Document Number <Doc>	Rev <RevCode>
Date: Monday, January 17, 2011	Sheet 48 of 50	

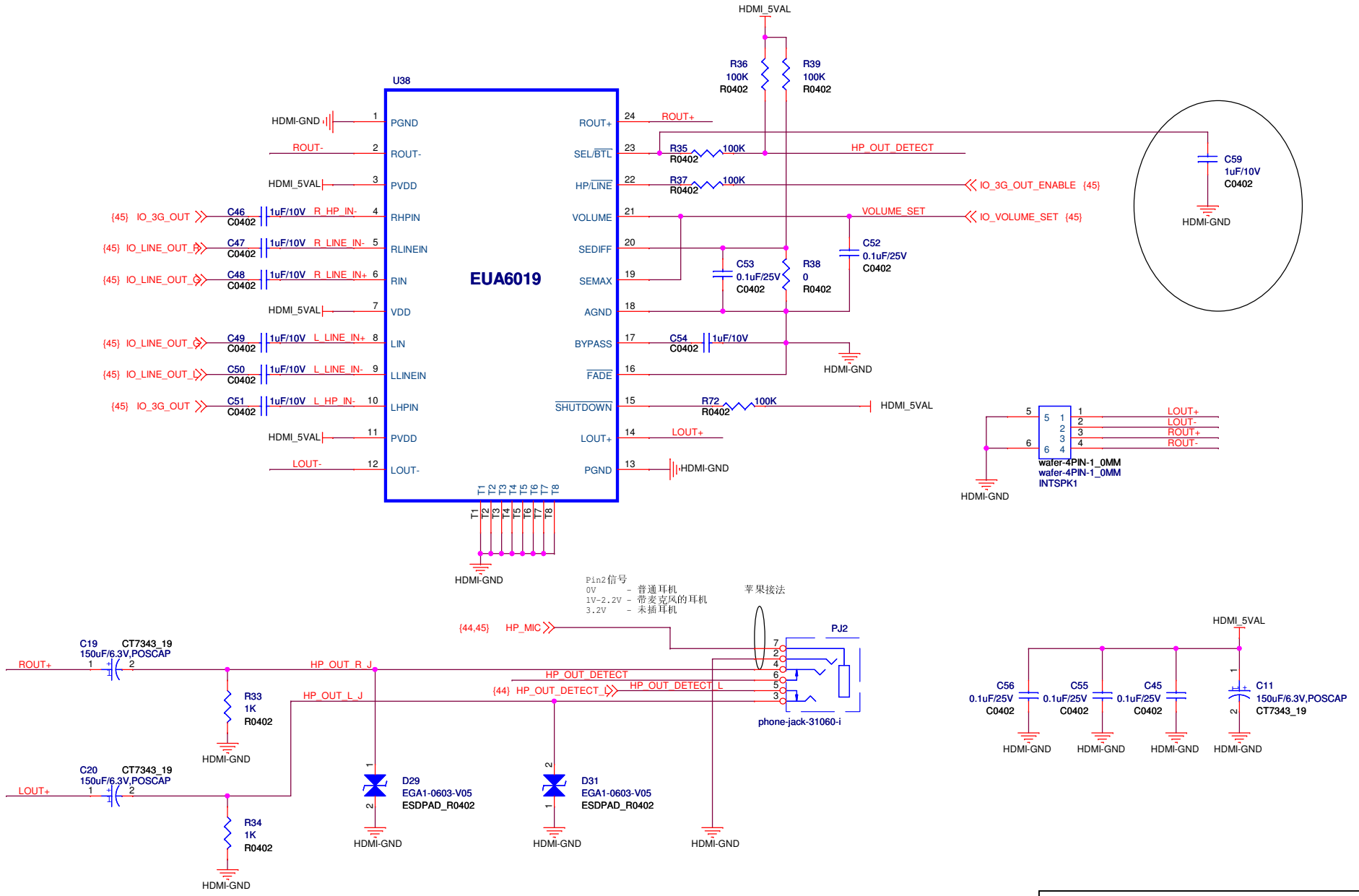

Title	<Title>	
Size B	Document Number <Doc>	Rev <RevCode>
Date: Monday, January 17, 2011	Sheet 49 of 49	