HAIER RK3288 KitchenHub V1.0

CONTENT INDEXING

- 01.Index
- 02.Change List
- 03.Block Diagram
- 04.I2C Map
- 05.Power Tree-RK808-B
- 06.RK3288 Power.10
- 07.RK3288 PMU Controler.11
- 08.RK3288 DDR Controler.12
- 09.RK3288 Flash Controler.13
- 10.RK3288 USB/HSIC Controler.14
- 11.RK3288 SARADC/Key Board.15
- 12.RK3288 DVP Interface.16
- 13.RK3288 Display Interface.17
- 14.RK3288 GPIO.18
- 15.USB Port.20
- 16.Power-RK808-B_2CELL.22
- 17.RAM-DDR3 4x16bit.30
- 18.Memory-eMMC.40
- 19.DVP power and Flash LED.45
- 20.Camera-MIPI CSI.46
- 21.LCM-LVDS Panel & Touch.53
- 22.Zwave & Zigbee modules
- 23.WIFI/BT module
- 24.HDMI IN
- 25.Audio Codec-PCM5100A
- 26.Sensors & MC connectors

6 LAYERS PCB STACK（e.g. PCB=1.0mm）

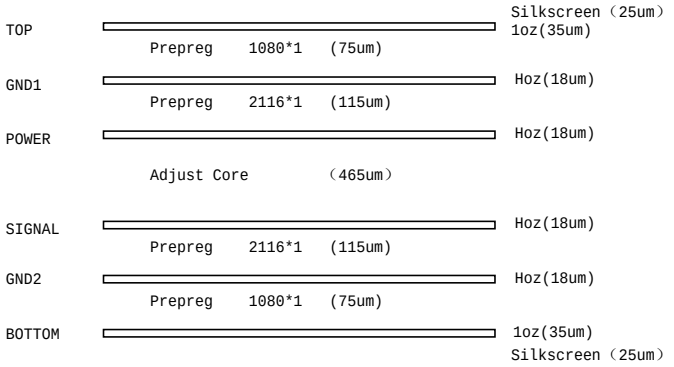

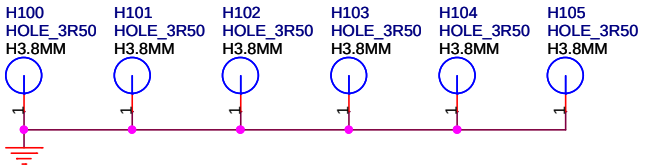

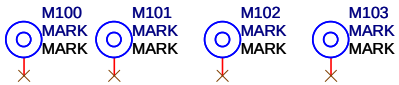

Haier Multimedia Co.,LTD.

Title: HAIER-RK3288-KitchenHub		
Size: A4	Document Number: <Doc>	Rev: 1.1
Date: Friday, July 20, 2018	Sheet 1 of 26	

Change List

Version	Date	Author	Change Note	Approved
V1.0	2018.4.12	Zuo Chuanjin	First edition	
V1.1	2018.7.20	Zuo Chuanjin	Second edition	

Haier	Haier Multimedia Co.,LTD.		
Title	HAIER-RK3288-KitchenHub		
Size A4	Document Number <Doc>		Rev 1.1
Date: Friday, July 20, 2018		Sheet 2 of 26	

Block Diagram

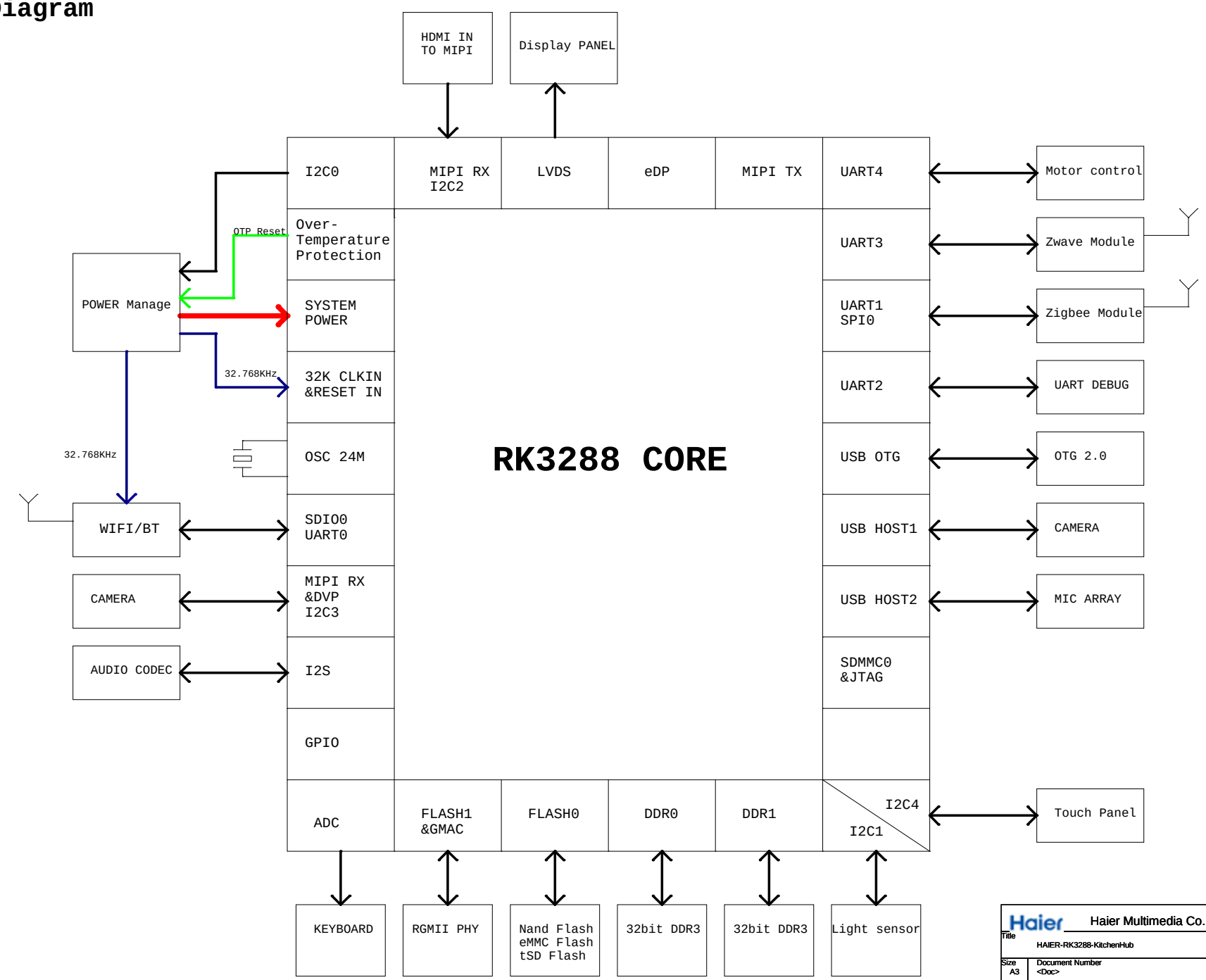

Haier	Haier Multimedia Co.,LTD.	
Title: HAIER-RK3288-KitchenHub		
Size: A3	Document Number: <Doc>	Rev: 1.1
Date: Friday, July 20, 2018	Sheet 3 of 26	

I2C MAP

Port	Pin name	Domain	Bus name	Pull-up voltage	Slave Device	Slave Addr (MS 7Bits)	Note	Slave Bus Capability
I2C0	I2C0_SDA/PMUGPIO0_B7 I2C0_SCL/PMUGPIO0_C0	PMUIO	I2C0_SDA_PMIC I2C0_SCL_PMIC	VCCIO_PMU	Rockchip RK808	0x36(1b)	PMIC	100kHz,400KHz
I2C1	I2C1_SDA/SC_RST/GPIO8_A4 I2C1_SCL/SC_CLK/GPIO8_A5	APIO2	I2C1_SDA_sensor I2C1_SCL_sensor	VCC_IO	OPT3001	0x88(44)	LIGHT-Sensor	100kHz,400KHz
I2C2	I2C2_SDA/GPIO6_B1 I2C2_SCL/GPIO6_B2	APIO4	I2C2_SDA_AUDIO I2C2_SCL_AUDIO	VCCIO_CODEC	TC358743XBG	0x1e(0f)	HDMI to MIPI bridge.	100kHz,400KHz
					ALC5651	0x34(1a)	Audio codec	100kHz,400KHz
I2C3	I2C3_SCL/GPIO2_C0 I2C3_SDA/GPIO2_C1	DVPIO	I2C3_SDA_CAM I2C3_SCL_CAM	VCC18_DVP	IMX179	0x20(10)	Image Sensor	100kHz,400KHz
I2C4	I2C4_SDA/GPIO7_C1 I2C4_SCL/GPIO7_C2	APIO1	I2C4_SDA_TP I2C4_SCL_TP	VCCIO_TP	ILI2312	0x41	Touch IC	100kHz,400KHz
I2C5	I2C5_SDA/EDPHDMI_I2C_SDA/GPIO7_C3 I2C5_SCL/EDPHDMI_I2C_SCL/GPIO7_C4	APIO1	I2C5_SDA_HDMI I2C5_SCL_HDMI					

Haier Multimedia Co.,LTD.

Title: HAIER-RK3288-KitchenHub

Size: A4 | Document Number: <Doc> | Rev: 1.1

Date: Friday, July 20, 2018 | Sheet 4 of 26

RK808-B POWER DIAGRAM

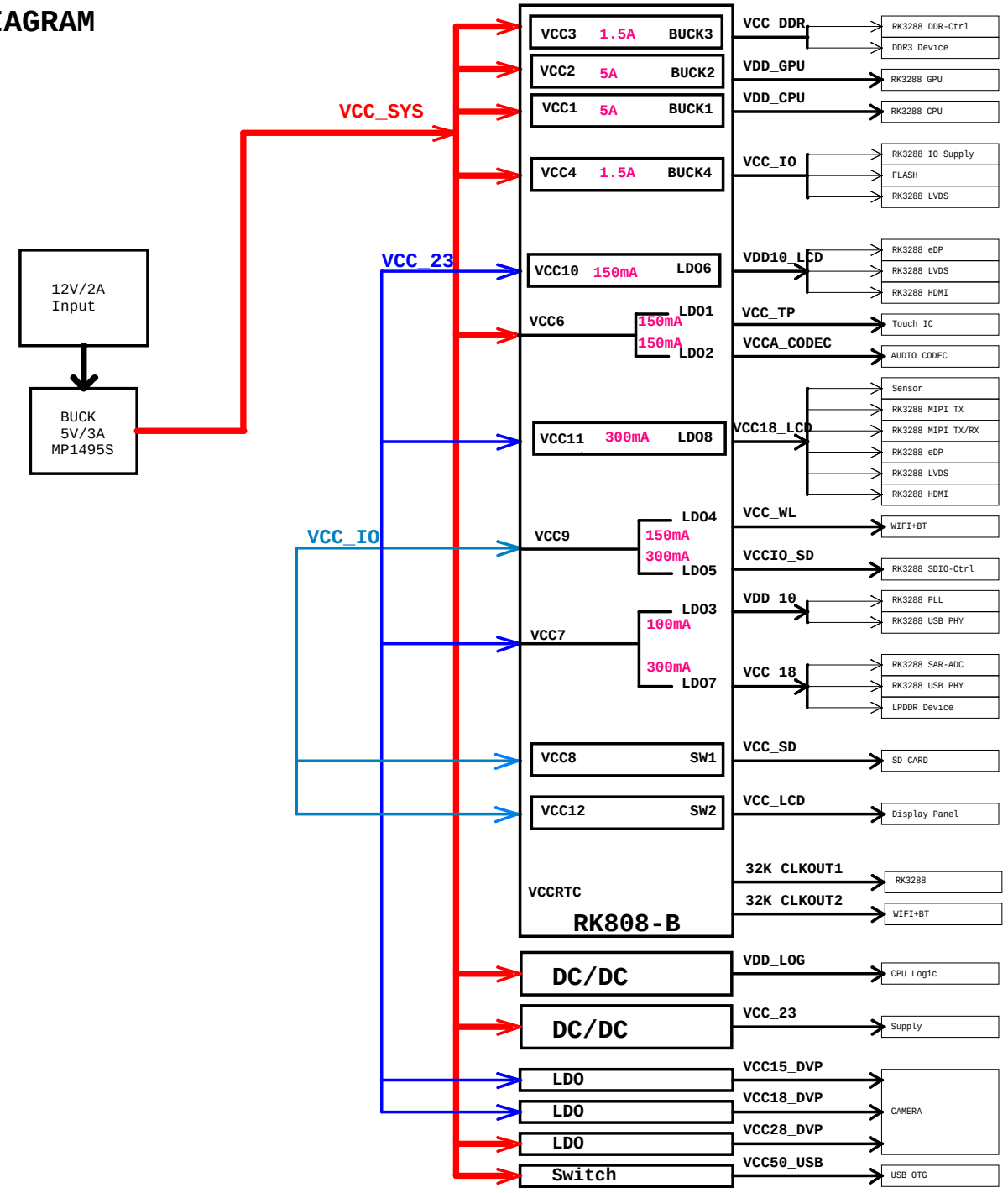

PowerName	PMIC Channel	TIMER (2mS)	default ON/OFF	default voltage	sleep ON/OFF
VDD_10	VLDO3	solt:1	ON	1.0V	ON
VDD_CPU	DCDC1	solt:2	ON	1.1V	OFF
VDD_GPU	DCDC2	solt:3	ON	1.1V	OFF
VCC_DDR	DCDC3	solt:3	ON	DDR3 1.5V DDR3L 1.35V LPDDR 1.25V	ON
VCC_LOG	EX_DCDC	solt:3A	ON	1.1V	ON
VCC_18	VLDO7	solt:3	ON	1.8V	ON
VCC_TP	VLDO1	solt:4	ON	1.8V	ON
VCC_IO	DCDC4	solt:4	ON	3.3V	ON
VCCIO_SD	VLDO5	solt:5	ON	3.3V	OFF
VCC_SD	VSWOUT1	solt:5	ON	3.3V	OFF
VDD10_LCD	VLDO6		OFF	1.0V	OFF
VCC18_LCD	VLDO8		OFF	1.8V	OFF
VCCA_CODEC	VLDO2		OFF	3.3V	OFF
VCC_WL	VLDO4		OFF	1.8V	OFF
VCC_LCD	VSWOUT2		OFF	3.3V	OFF

Haier Haier Multimedia Co.,LTD.

Title: HAIER-RK3288-KitchenHub

Size	Document Number	Rev
A3	<Doc>	1.1

Date: Friday, July 20, 2018 Sheet 5 of 26

RK3288_R

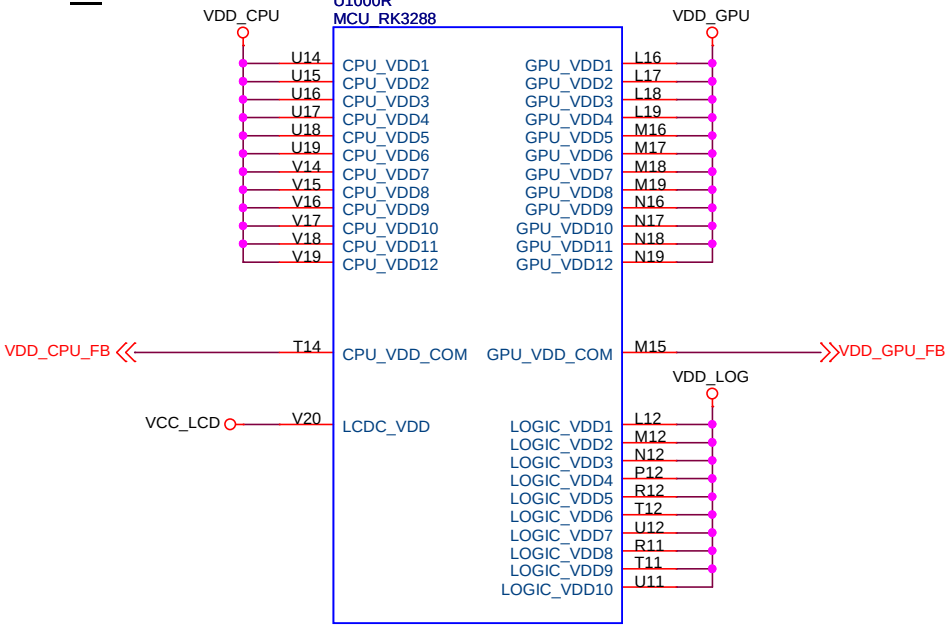

RK3288_M

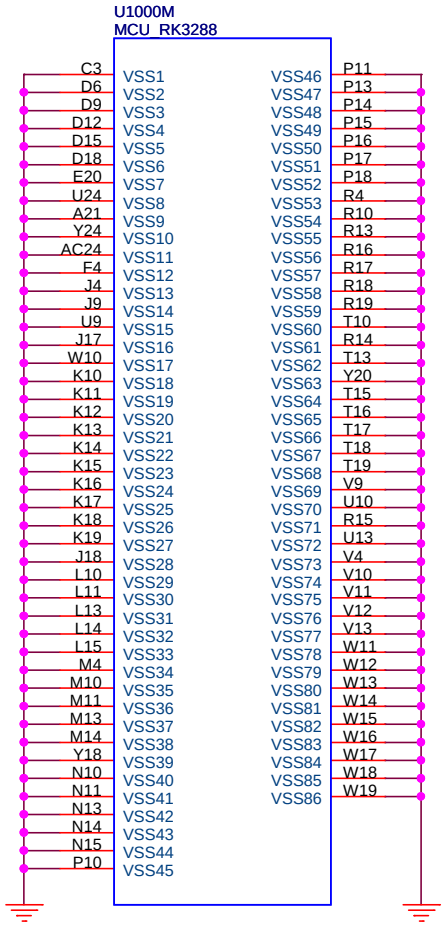

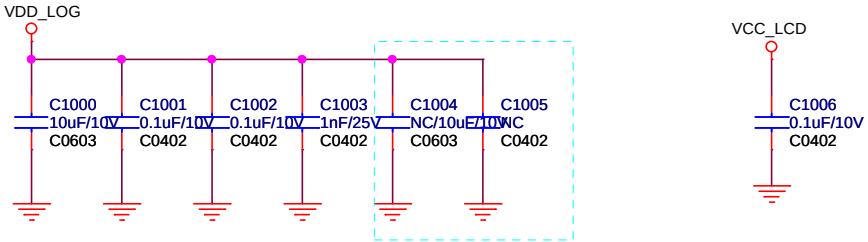

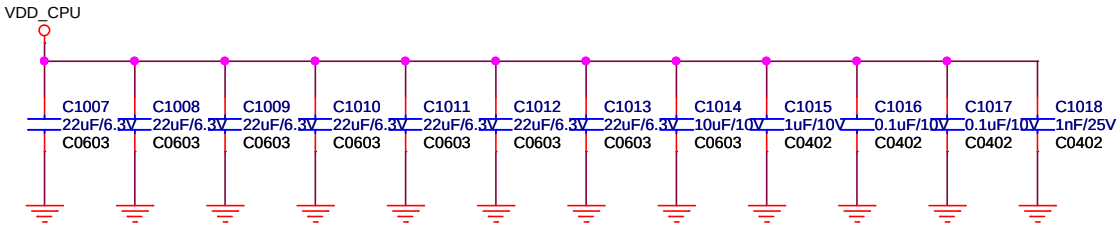

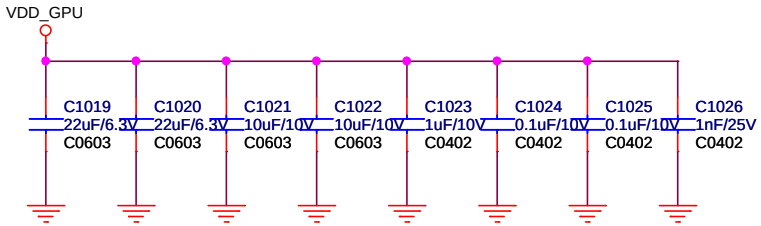

RK3288 Power Filter

Note: All the capacitor should be place close to the power pin of RK3288。

Haier	Haier Multimedia Co.,LTD.		
Title	HAIER-RK3288-KitchenHub		
Size A4	Document Number <Doc>		Rev 1.1
Date: Friday, July 20, 2018	Sheet 6 of 26		

RK3288_D

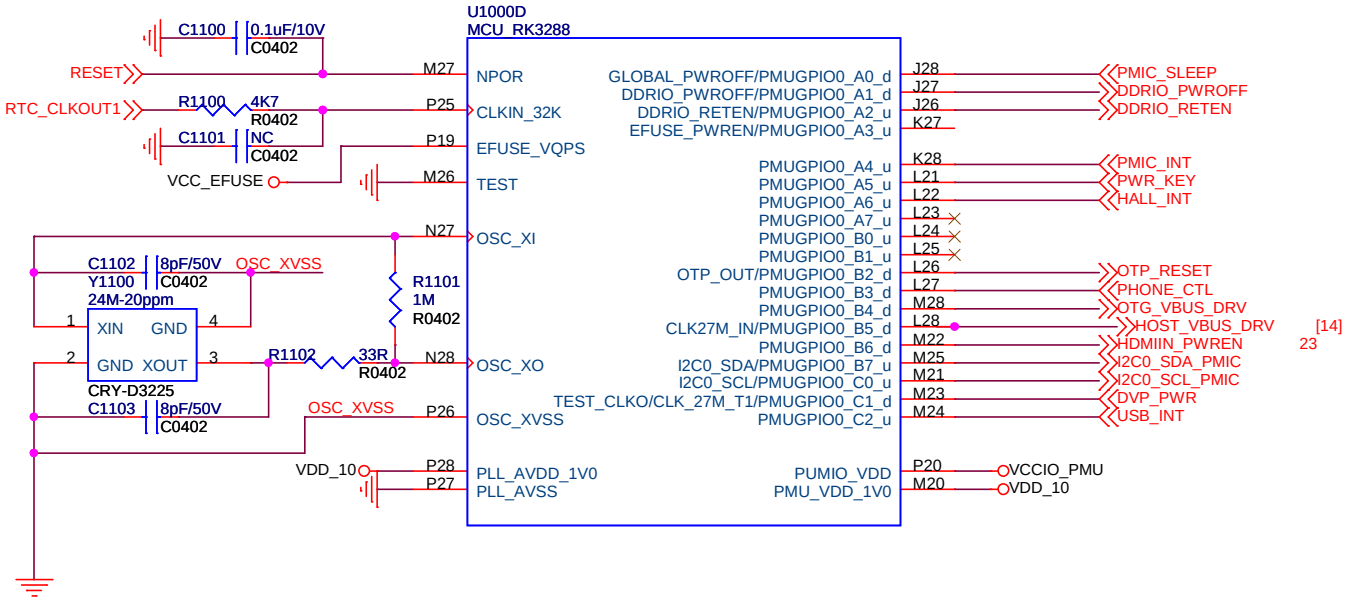

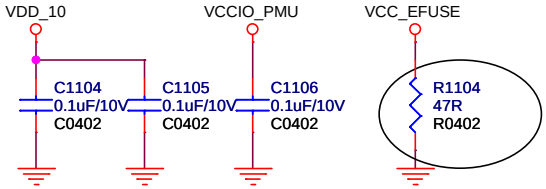

Note: All the capacitor should be place close to the power pin of RK3288。

Haier Multimedia Co.,LTD.		
Title: HAIER-RK3288-KitchenHub		
Size: A4	Document Number: <Doc>	Rev: 1.1
Date: Friday, November 09, 2018	Sheet 7 of 26	

RK3288_K DDR Channel-0

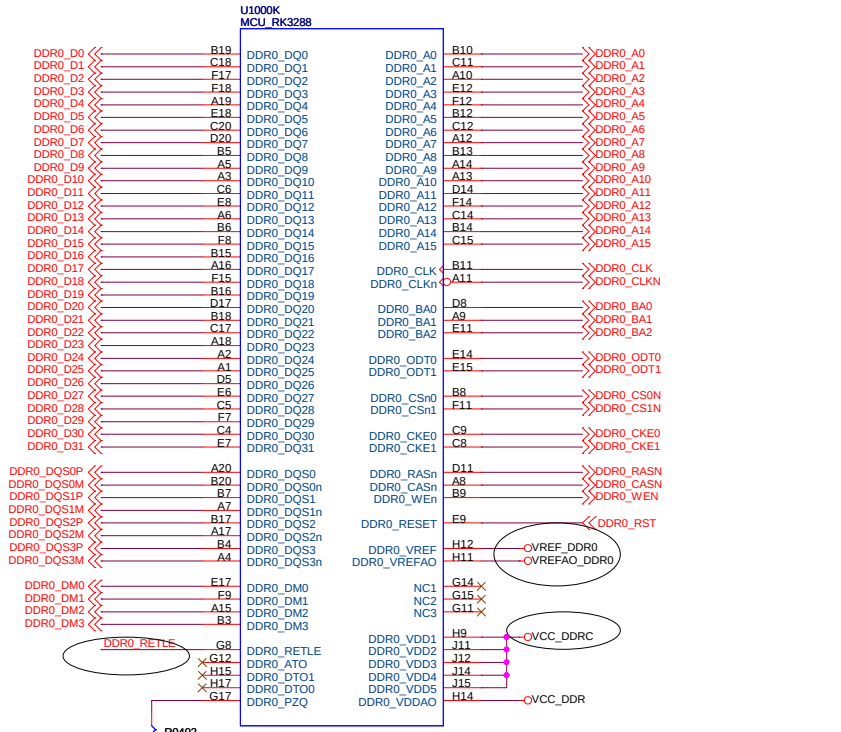

	R1202 R1203	R1204 R1205
DDR3	120K	120K
LPDDR2/3	100K	82K

公版在芯片端和DDR端分别加了分压电阻。
新参考设计只在芯片端加了分压电阻，但是分了两路。

Note: All the capacitor should be place close to the power pin of RK3288。

RK3288_L DDR Channel-1

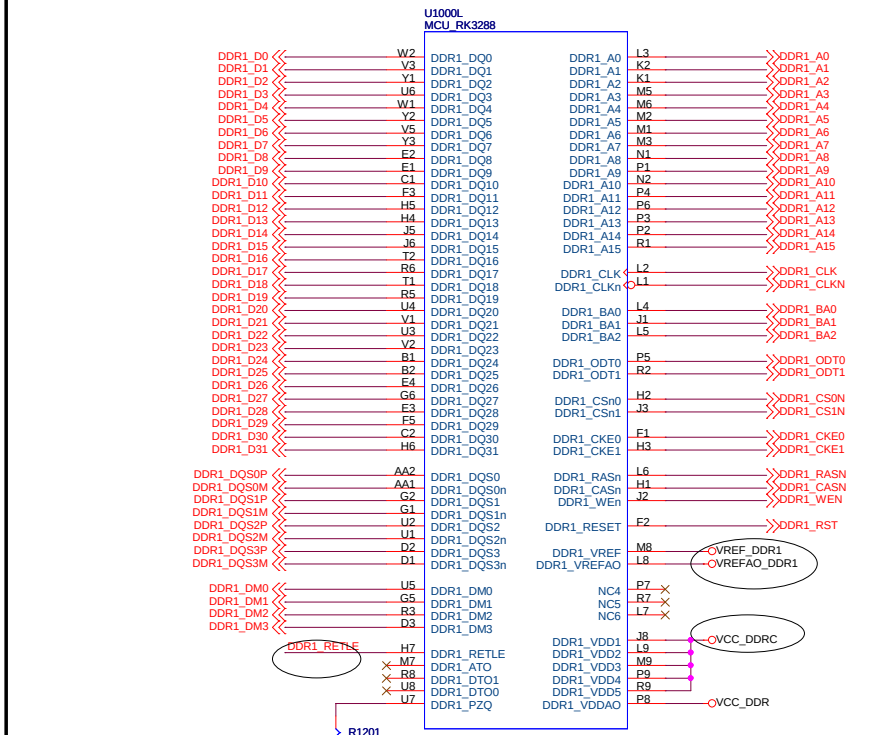

Note: All the capacitor should be place close to the power pin of RK3288。

Haier Haier Multimedia Co.,LTD.

Title	HAIER-RK3288-KitchenHub	
Size A3	Document Number <Doc>	Rev 1.1
Date: Friday, July 20, 2018	Sheet 8 of 26	

RK3288_P

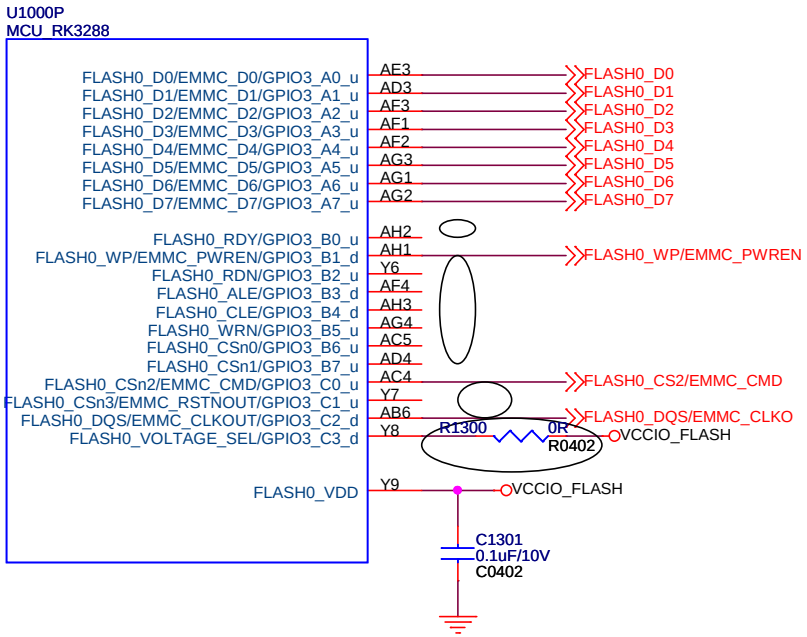

Note: All the capacitor should be place close to the power pin of RK3288。

	VCCIO_FLASH=1.8V	VCCIO_FLASH=3.3V
FLASH0_VOLTAGE_SEL pin connect to	VCCIO_FLASH	Floating(Default)
R1300	0R	DNP

RK3288_Q

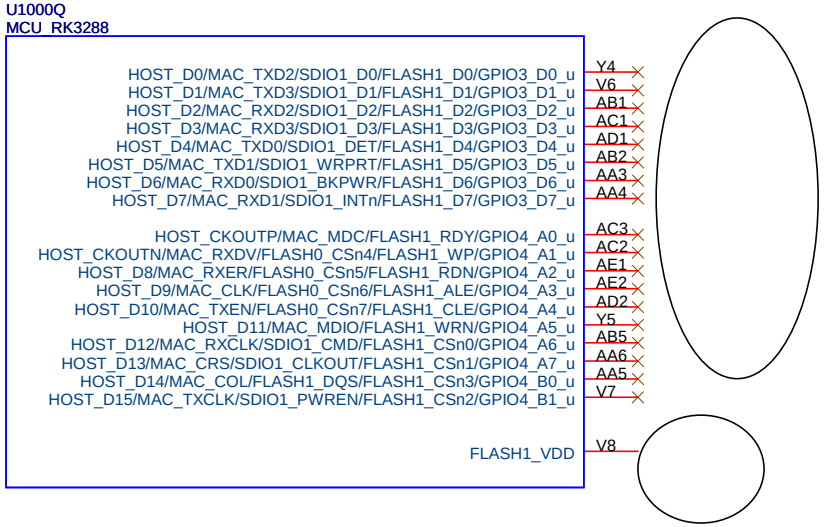

Note: All the capacitor should be place close to the power pin of RK3288。

Haier	Haier Multimedia Co.,LTD.		
Title	HAIER-RK3288-KitchenHub		
Size A4	Document Number <Doc>		Rev 1.1
Date: Friday, July 20, 2018	Sheet 9 of 26		

RK3288_E

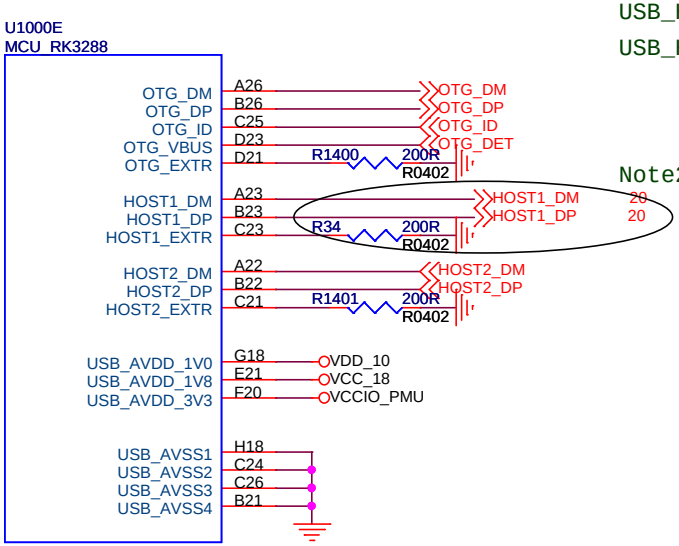

OTG port for debug.

USB_HOST1 for USB camera.

USB_HOST2 for MIC array.

Note2: USB_HOST1 don't support USB1.1;

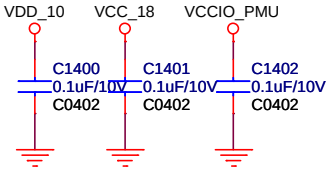

Note: All the capacitor should be place close to the power pin of RK3288。

RK3288_U

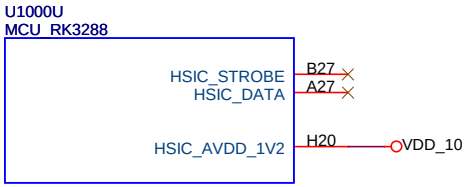

Haier Haier Multimedia Co.,LTD.			
Title: HAIER-RK3288-KitchenHub			
Size: A4	Document Number: <Doc>		Rev: 1.1
Date: Friday, July 20, 2018	Sheet 10 of 26		

RK3288_T

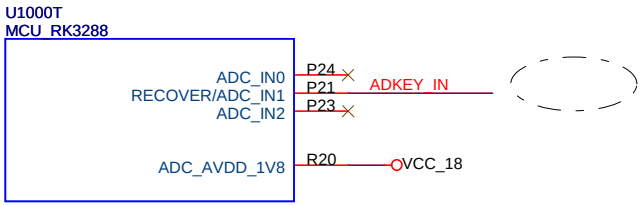

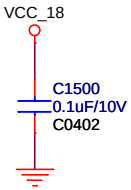

Note: All the capacitor should be place close to the power pin of RK3288。

KEY

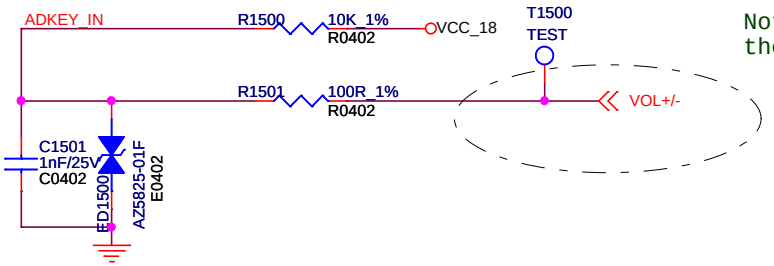

Note: When the system power on, if ADKEY_IN=0V, then enter Recovery mode;

Haier	Haier Multimedia Co.,LTD.		
Title	HAIER-RK3288-KitchenHub		
Size A4	Document Number <Doc>		Rev 1.1
Date: Wednesday, October 31, 2018	Sheet 11 of 26		

RK3288_C

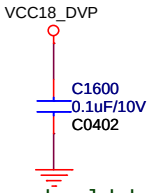

CIF depends on camera.

Note: All the capacitor should be place close to the power pin of RK3288。

U1000C
MCU_RK3288

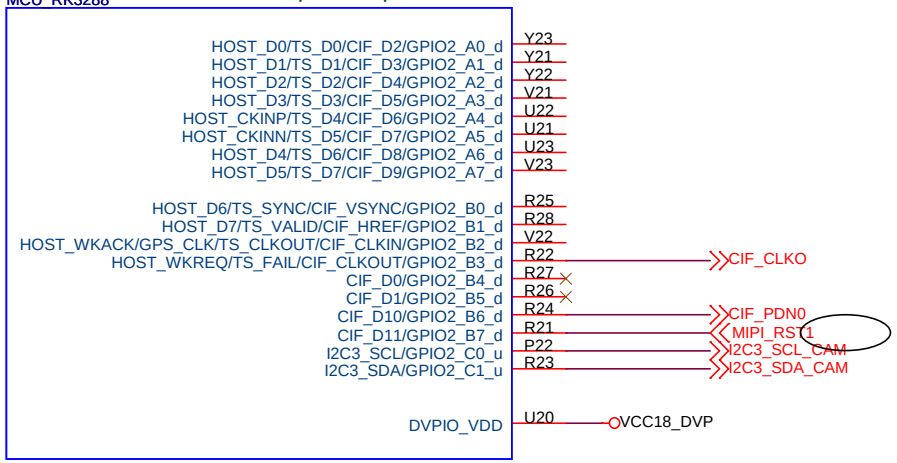

RK3288_W

U1000W
MCU_RK3288

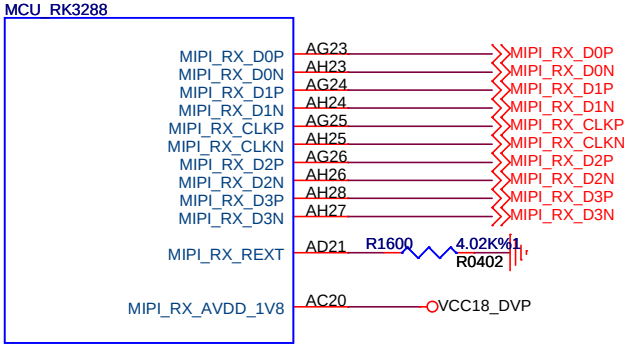

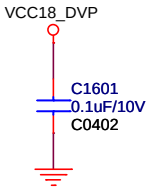

Haier Multimedia Co.,LTD.			
Title: HAIER-RK3288-KitchenHub			
Size: A4	Document Number: <Doc>		Rev: 1.1
Date: Friday, July 20, 2018		Sheet 12 of 26	

RK3288_V

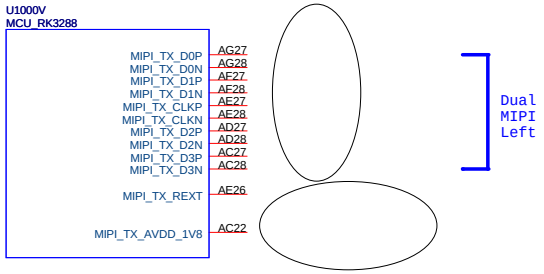

RK3288_O

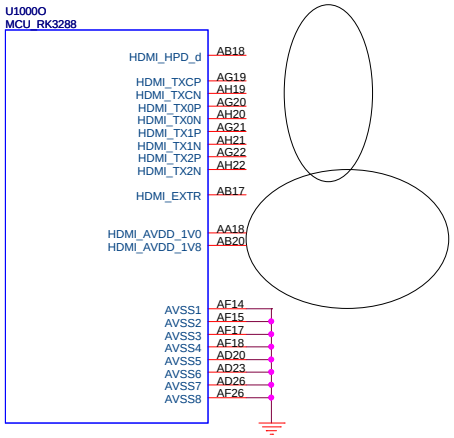

RK3288_A

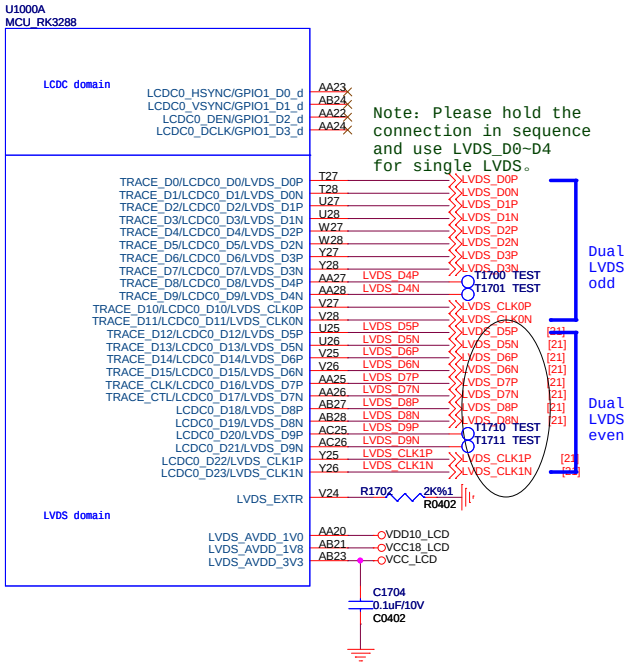

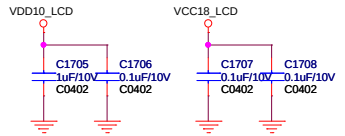

Note: All the capacitor should be place close to the power pin of RK3288。

RK3288_X

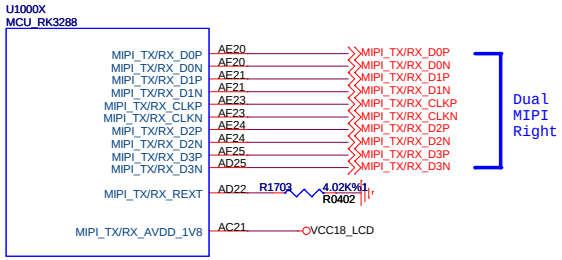

RK3288_N

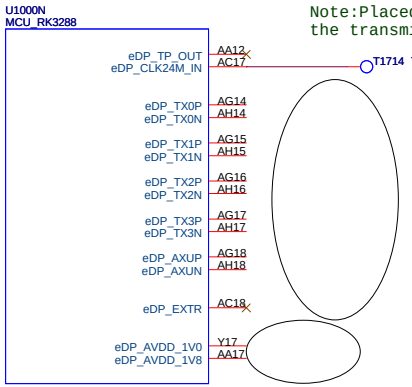

Correspondence between LCDC DATA and RGB

LCDC_D0	B0	LCDC_D8	G0	LCDC_D16	R0
LCDC_D1	B1	LCDC_D9	G1	LCDC_D17	R1
LCDC_D2	B2	LCDC_D10	G2	LCDC_D18	R2
LCDC_D3	B3	LCDC_D11	G3	LCDC_D19	R3
LCDC_D4	B4	LCDC_D12	G4	LCDC_D20	R4
LCDC_D5	B5	LCDC_D13	G5	LCDC_D21	R5
LCDC_D6	B6	LCDC_D14	G6	LCDC_D22	R6
LCDC_D7	B7	LCDC_D15	G7	LCDC_D23	R7

Haier Haier Multimedia Co.,LTD.

Title: HAIER-RK3288-KitchenHub

Size	Document Number	Rev
A3	<Doc>	1.1

Date: Friday, July 20, 2018 Sheet 13 of 26

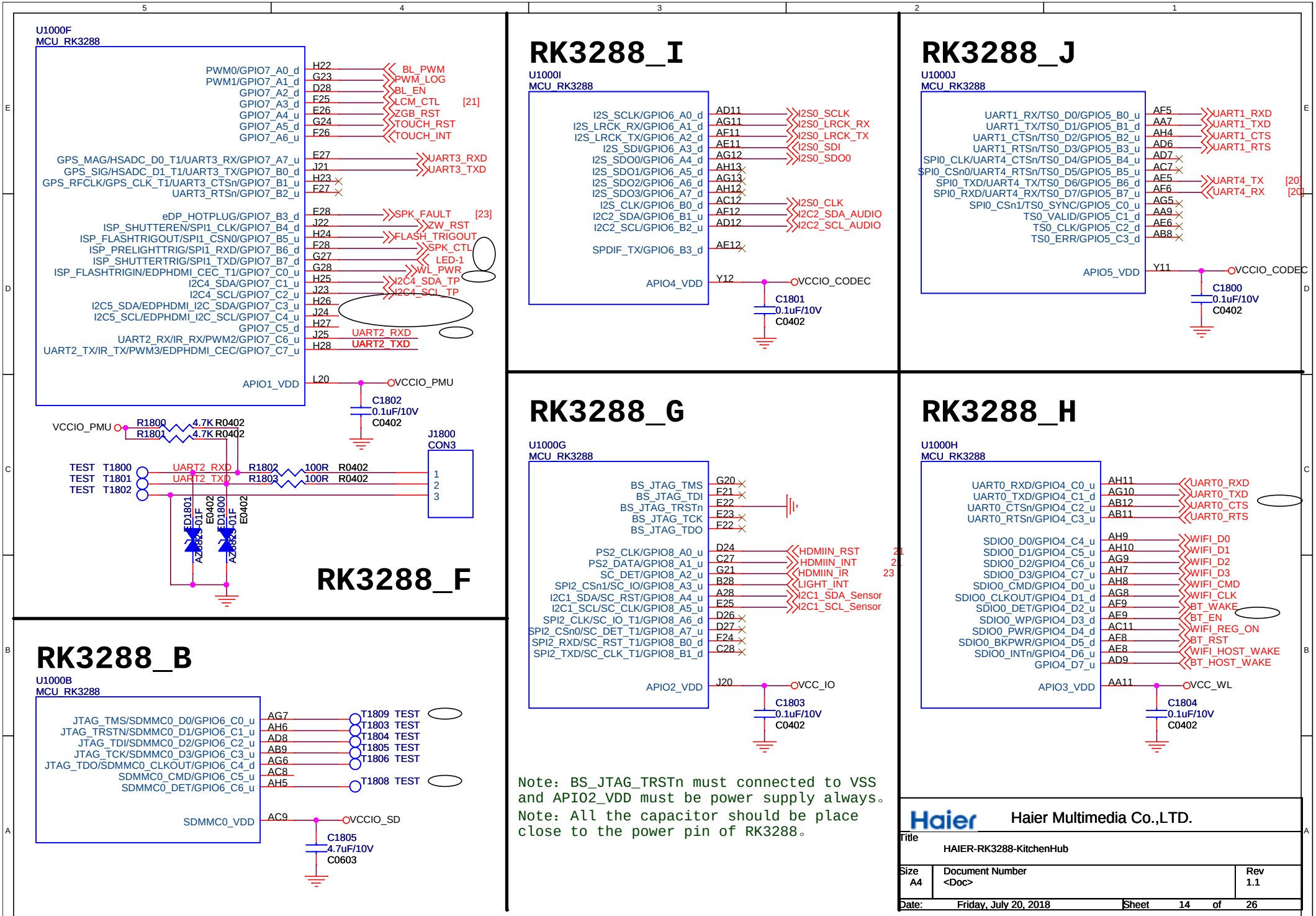
U1000F
MCU_RK3288
PWM0/GPIO7_A0_d
PWM1/GPIO7_A1_d
GPIO7_A2_d
GPIO7_A3_d
GPIO7_A4_u
GPIO7_A5_d
GPIO7_A6_u
H22
G23
D28
F25
E26
G24
F26
BL_PWM
PWM_LOG
BL_EN
LCM_CTL
ZGB_RST
TOUCH_RST
TOUCH_INT
[21]
GPS_MAG/HSADC_D0_T1/UART3_RX/GPIO7_A7_u
GPS_SIG/HSADC_D1_T1/UART3_TX/GPIO7_B0_d
GPS_RFCLK/GPS_CLK_T1/UART3_CTSn/GPIO7_B1_u
UART3_RTSn/GPIO7_B2_u
E27
J21
H23
F27
UART3_RXD
UART3_TXD
eDP_HOTPLUG/GPIO7_B3_d
ISP_SHUTTEREN/SPI1_CLK/GPIO7_B4_d
ISP_FLASHTRIGOUT/SPI1_CSN0/GPIO7_B5_u
ISP_PRELIGHTTRIG/SPI1_RXD/GPIO7_B6_d
ISP_SHUTTERTRIG/SPI1_TXD/GPIO7_B7_d
ISP_FLASHTRIGIN/EDPHDMI_CEC_T1/GPIO7_C0_u
I2C4_SDA/GPIO7_C1_u
I2C4_SCL/GPIO7_C2_u
I2C5_SDA/EDPHDMI_I2C_SDA/GPIO7_C3_u
I2C5_SCL/EDPHDMI_I2C_SCL/GPIO7_C4_u
GPIO7_C5_d
UART2_RX/IR_RX/PWM2/GPIO7_C6_u
UART2_TX/IR_TX/PWM3/EDPHDMI_CEC/GPIO7_C7_u
E28
J22
H24
F28
G27
G28
H25
J23
H26
J24
H27
J25
H28
SPK_FAULT
[23]
ZW_RST
FLASH_TRIGOUT
SPK_CTL
LED-1
WL_PWR
I2C4_SDA_TP
I2C4_SCL_TP
UART2_RXD
UART2_TXD
APIO1_VDD
L20
VCCIO_PMU
C1802
0.1uF/10V
C0402
VCCIO_PMU
R1800
R1801
4.7K R0402
4.7K R0402
J1800
CON3
TEST T1800
TEST T1801
TEST T1802
UART2_RXD
UART2_TXD
R1802
R1803
100R R0402
100R R0402
1
2
3
ED1801
AZ6835-01F
E0402
ED1800
AZ6835-01F
E0402
RK3288_F
RK3288_I
U1000I
MCU_RK3288
I2S_SCLK/GPIO6_A0_d
I2S_LRCK_RX/GPIO6_A1_d
I2S_LRCK_TX/GPIO6_A2_d
I2S_SDI/GPIO6_A3_d
I2S_SDO0/GPIO6_A4_d
I2S_SDO1/GPIO6_A5_d
I2S_SDO2/GPIO6_A6_d
I2S_SDO3/GPIO6_A7_d
I2S_CLK/GPIO6_B0_d
I2C2_SDA/GPIO6_B1_u
I2C2_SCL/GPIO6_B2_u
SPDIF_TX/GPIO6_B3_d
AD11
AG11
AF11
AE11
AG12
AH13
AG13
AH12
AC12
AF12
AD12
AE12
I2S0_SCLK
I2S0_LRCK_RX
I2S0_LRCK_TX
I2S0_SDI
I2S0_SDO0
I2S0_CLK
I2C2_SDA_AUDIO
I2C2_SCL_AUDIO
APIO4_VDD
Y12
VCCIO_CODEC
C1801
0.1uF/10V
C0402
RK3288_J
U1000J
MCU_RK3288
UART1_RX/TS0_D0/GPIO5_B0_u
UART1_TX/TS0_D1/GPIO5_B1_d
UART1_CTSn/TS0_D2/GPIO5_B2_u
UART1_RTSn/TS0_D3/GPIO5_B3_u
SPI0_CLK/UART4_CTSn/TS0_D4/GPIO5_B4_u
SPI0_CSn0/UART4_RTSn/TS0_D5/GPIO5_B5_u
SPI0_TXD/UART4_TX/TS0_D6/GPIO5_B6_d
SPI0_RXD/UART4_RX/TS0_D7/GPIO5_B7_u
SPI0_CSn1/TS0_SYNC/GPIO5_C0_u
TS0_VALID/GPIO5_C1_d
TS0_CLK/GPIO5_C2_d
TS0_ERR/GPIO5_C3_d
AF5
AA7
AH4
AD6
AD7
AC7
AE5
AE6
AG5
AA9
AE6
AB8
UART1_RXD
UART1_TXD
UART1_CTS
UART1_RTS
UART4_TX
UART4_RX
[20]
[20]
APIO5_VDD
Y11
VCCIO_CODEC
C1800
0.1uF/10V
C0402
RK3288_G
U1000G
MCU_RK3288
BS_JTAG_TMS
BS_JTAG_TDI
BS_JTAG_TRSTn
BS_JTAG_TCK
BS_JTAG_TDO
G20
F21
E22
E23
F22
PS2_CLK/GPIO8_A0_u
PS2_DATA/GPIO8_A1_u
SC_DET/GPIO8_A2_u
SPI2_CSn1/SC_IO/GPIO8_A3_u
I2C1_SDA/SC_RST/GPIO8_A4_u
I2C1_SCL/SC_CLK/GPIO8_A5_u
SPI2_CLK/SC_IO_T1/GPIO8_A6_d
SPI2_CSn0/SC_DET_T1/GPIO8_A7_u
SPI2_RXD/SC_RST_T1/GPIO8_B0_d
SPI2_TXD/SC_CLK_T1/GPIO8_B1_d
D24
C27
G21
B28
A28
E25
D26
D27
F24
C28
HDMIIN_RST
HDMIIN_INT
HDMIIN_IR
LIGHT_INT
I2C1_SDA_Sensor
I2C1_SCL_Sensor
21
22
23
APIO2_VDD
J20
VCC_IO
C1803
0.1uF/10V
C0402
Note: BS_JTAG_TRSTn must connected to VSS and APIO2_VDD must be power supply always.
Note: All the capacitor should be place close to the power pin of RK3288.
RK3288_H
U1000H
MCU_RK3288
UART0_RXD/GPIO4_C0_u
UART0_TXD/GPIO4_C1_d
UART0_CTSn/GPIO4_C2_u
UART0_RTSn/GPIO4_C3_u
SDIO0_D0/GPIO4_C4_u
SDIO0_D1/GPIO4_C5_u
SDIO0_D2/GPIO4_C6_u
SDIO0_D3/GPIO4_C7_u
SDIO0_CMD/GPIO4_D0_u
SDIO0_CLKOUT/GPIO4_D1_d
SDIO0_DET/GPIO4_D2_u
SDIO0_WP/GPIO4_D3_d
SDIO0_PWR/GPIO4_D4_d
SDIO0_BKPWR/GPIO4_D5_d
SDIO0_INTn/GPIO4_D6_u
GPIO4_D7_u
AH11
AG10
AB12
AB11
AH9
AH10
AG9
AH7
AH8
AG8
AF9
AE9
AC11
AF8
AE8
AD9
UART0_RXD
UART0_TXD
UART0_CTS
UART0_RTS
WIFI_D0
WIFI_D1
WIFI_D2
WIFI_D3
WIFI_CMD
WIFI_CLK
BT_WAKE
BT_EN
WIFI_REG_ON
BT_RST
WIFI_HOST_WAKE
BT_HOST_WAKE
APIO3_VDD
AA11
VCC_WL
C1804
0.1uF/10V
C0402
RK3288_B
U1000B
MCU_RK3288
JTAG_TMS/SDMMC0_D0/GPIO6_C0_u
JTAG_TRSTN/SDMMC0_D1/GPIO6_C1_u
JTAG_TDI/SDMMC0_D2/GPIO6_C2_u
JTAG_TCK/SDMMC0_D3/GPIO6_C3_u
JTAG_TDO/SDMMC0_CLKOUT/GPIO6_C4_d
SDMMC0_CMD/GPIO6_C5_u
SDMMC0_DET/GPIO6_C6_u
AG7
AH6
AD8
AB9
AG6
AC8
AH5
T1809 TEST
T1803 TEST
T1804 TEST
T1805 TEST
T1806 TEST
T1808 TEST
SDMMC0_VDD
AC9
VCCIO_SD
C1805
4.7uF/10V
C0603
Haier
Haier Multimedia Co.,LTD.
Title
HAIER-RK3288-KitchenHub
Size
A4
Document Number
<Doc>
Rev
1.1
Date:
Friday, July 20, 2018
Sheet
14
of
26

USB OTG PORT

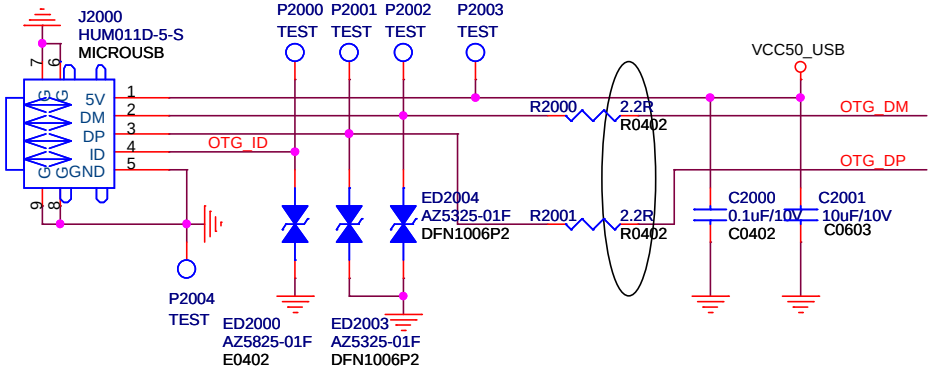

USB Detection

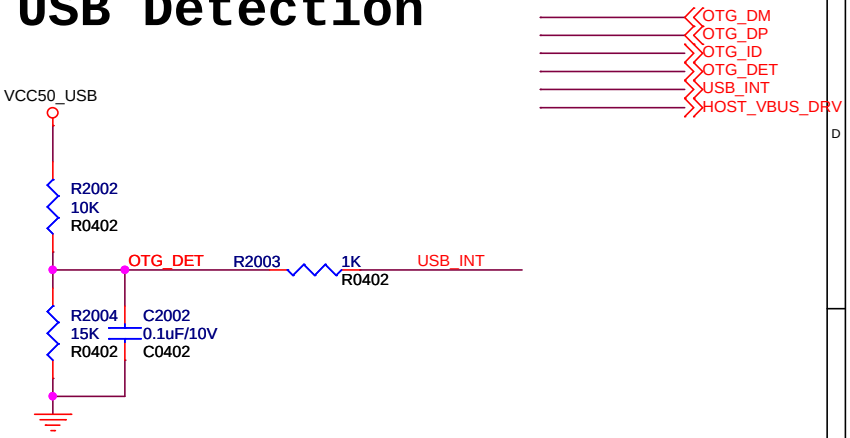

USB Port for Touch(option)

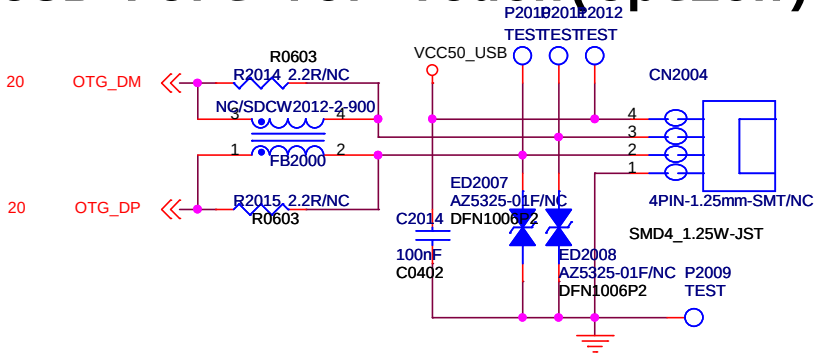

USB Port for Camera

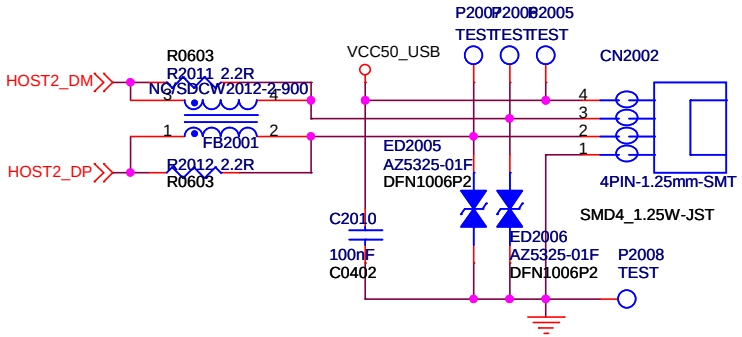

Power supply for Memorystick

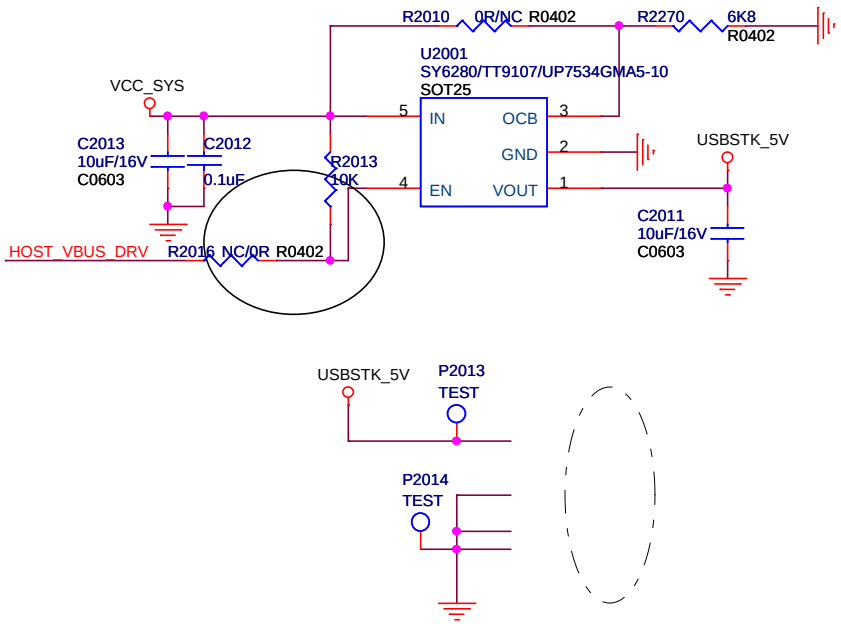

Haier	Haier Multimedia Co.,LTD.	
Title	HAIER-RK3288-KitchenHub	
Size A4	Document Number <Doc>	Rev 1.1
Date: Friday, September 21, 2018	Sheet 15 of 26	

DC IN

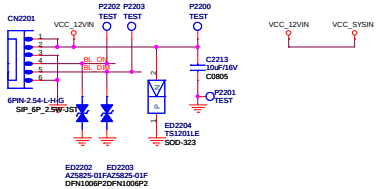

Backlight Control

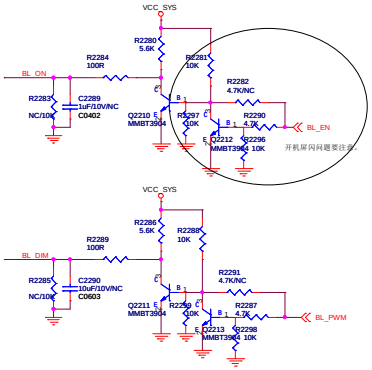

VCC_SYS POWER

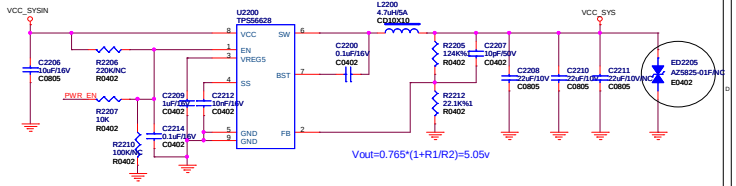

PMIC RK808-B

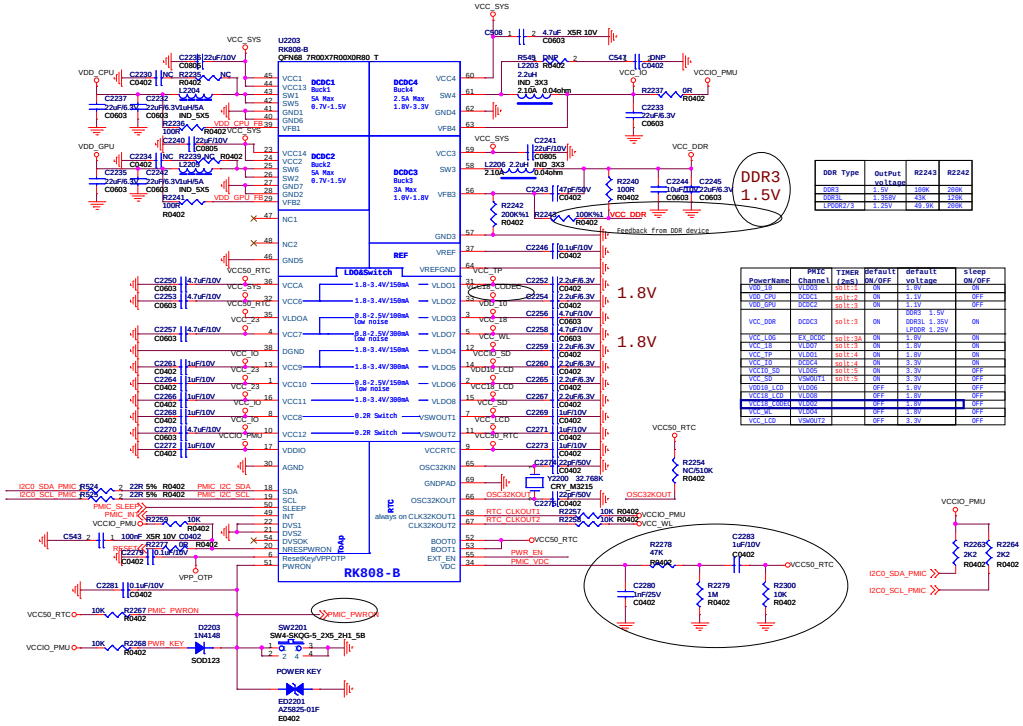

Gas Gauge

BATTERY

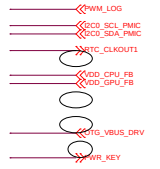

VDD_LOG POWER

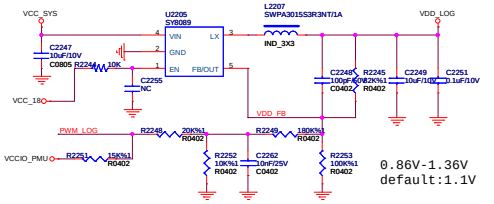

OTP & RESET

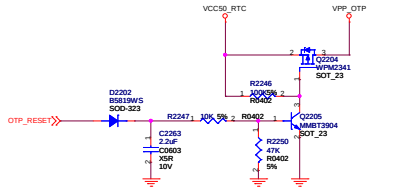

VCC_20 POWER

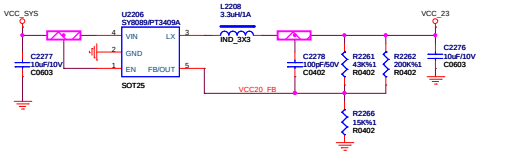

OTG POWER

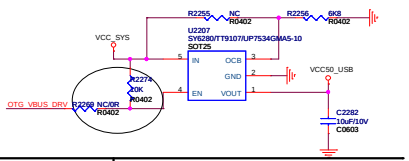

Power for WIFI/BT

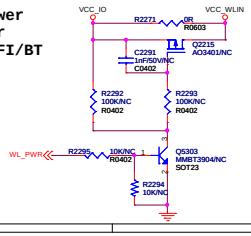

RTC POWER

Note:If VCC50_RTC over-voltage of 6V,please use R2273=100ohm and C2288=1uF.

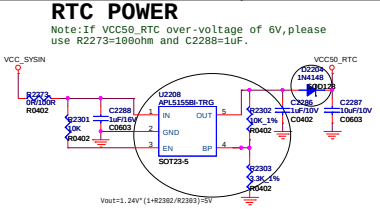

Power for ZIGBEE/ZWAVE

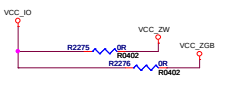

Haier Haier Multimedia Co.,LTD.

File	HAIER-RK3288-KitchenHub	
Size	Document Number	Rev
Custom<Doc>		1.1
Date: Friday, July 20, 2018	Sheet 16 of 26	

DDR3 4x16bit

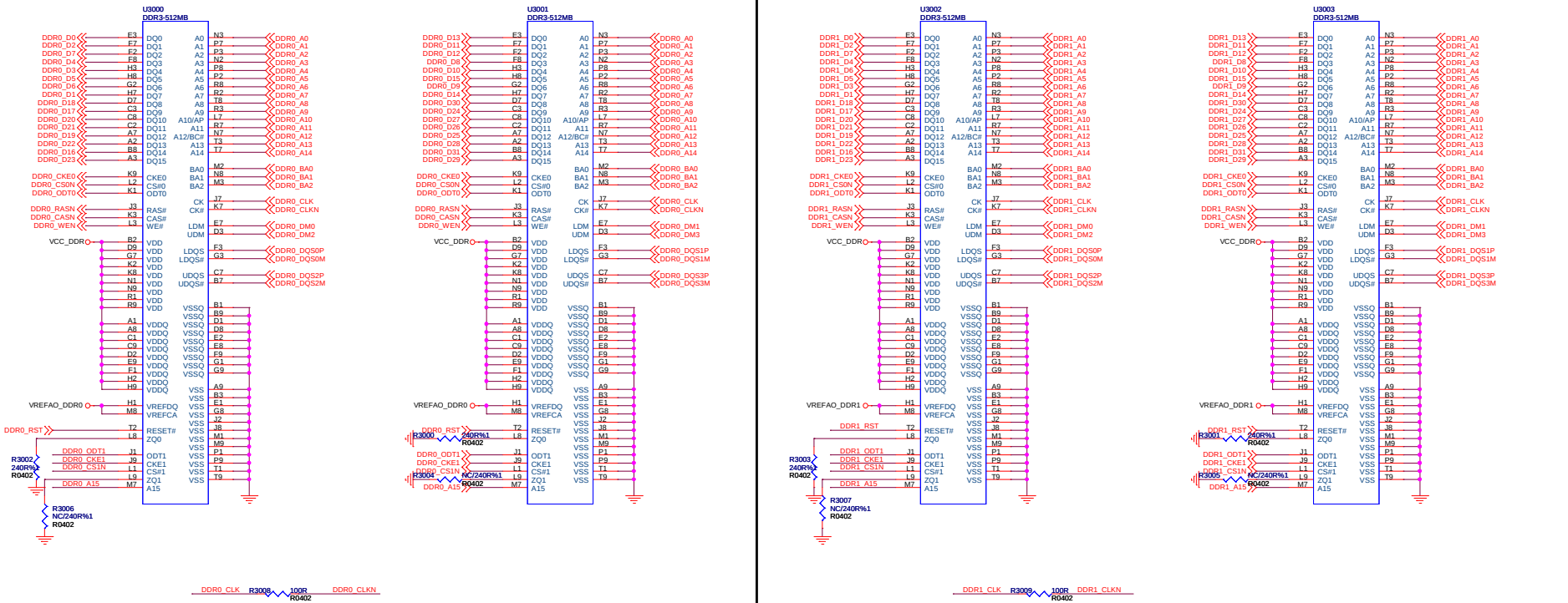

DDR0 FILTER

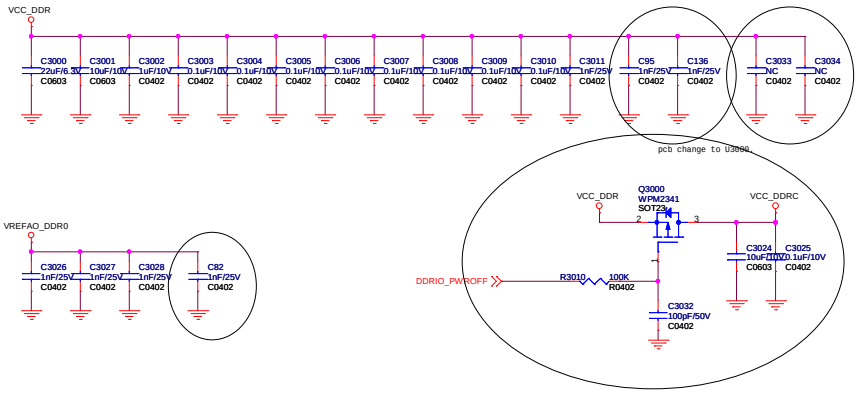

DDR1 FILTER

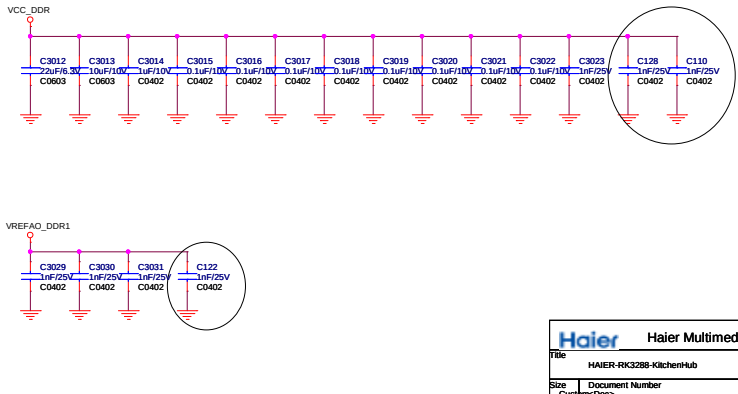

Haier	Haier Multimedia Co.,LTD.	
Title	HAIER-RK3288-KitchenHub	
Size: Custom<Doc>	Document Number	Rev: 1.1
Date: Friday, July 20, 2018	Sheet 17 of 26	

eMMC FLASH

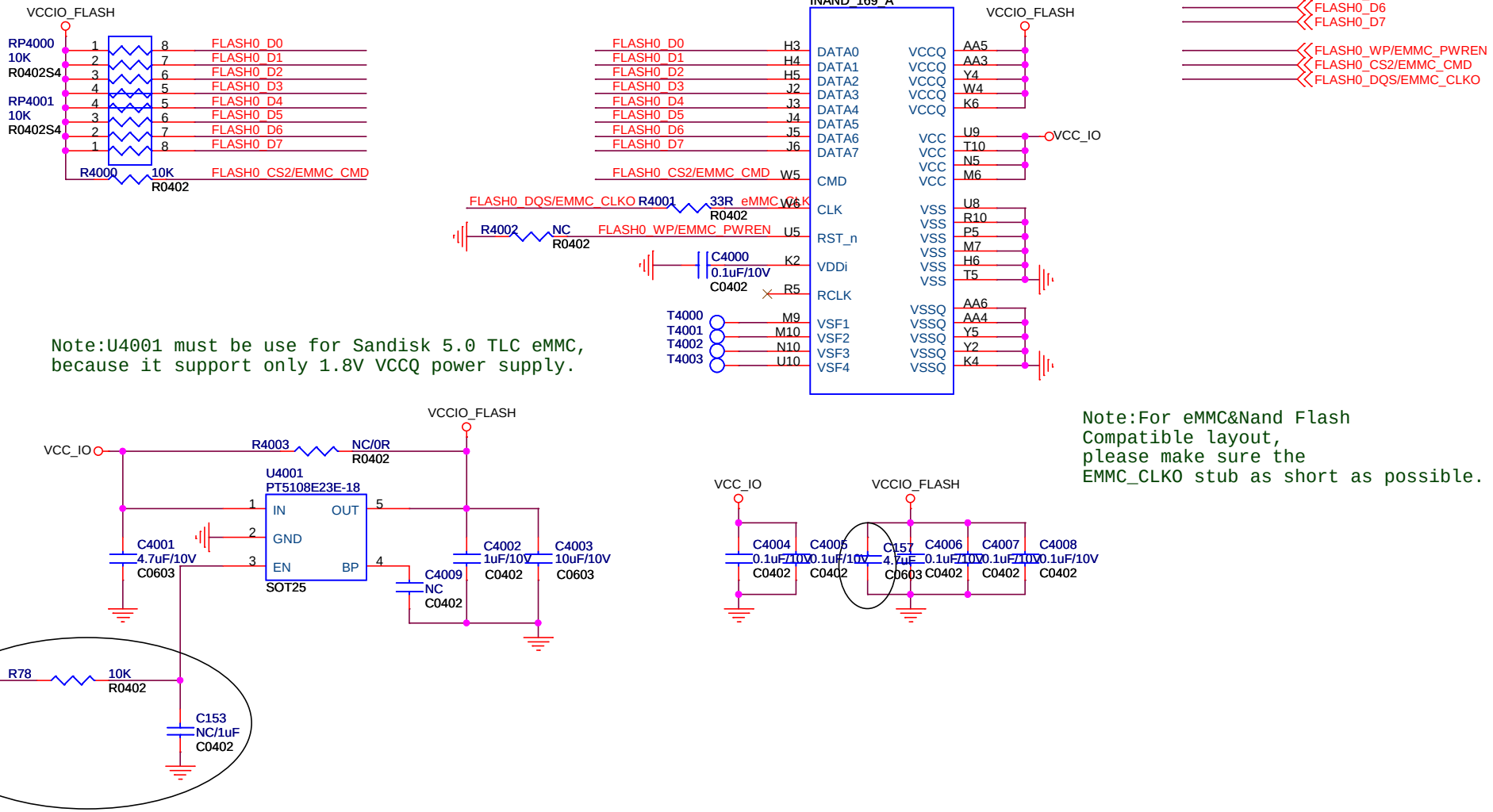

Haier	Haier Multimedia Co.,LTD.	
Title	HAIER-RK3288-KitchenHub	
Size A4	Document Number <Doc>	Rev 1.1
Date: Friday, July 20, 2018	Sheet 18 of 26	

DVP Power

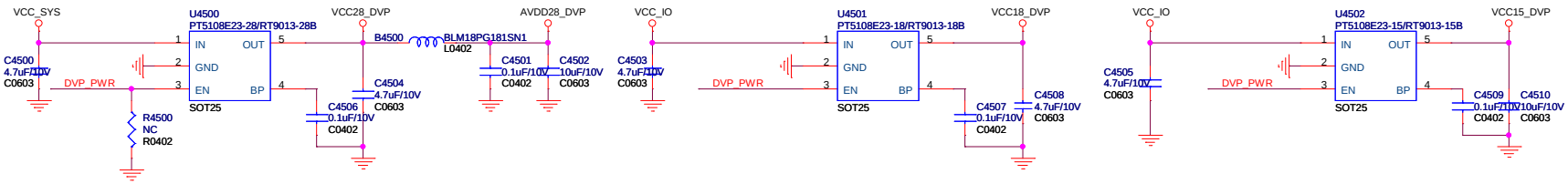

INDICATOR LED

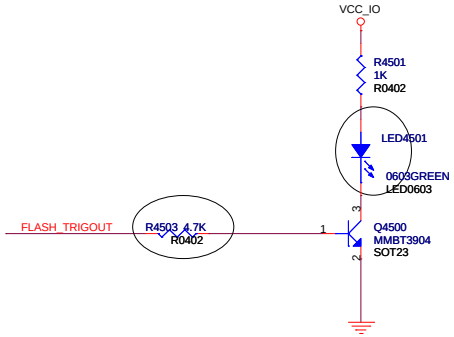

Haier Multimedia Co.,LTD.		
Title: HAIER-RK3288-KitchenHub		
Size: A3	Document Number: <Doc>	Rev: 1.1
Date: Friday, July 20, 2018	Sheet 19 of 26	

MIPI Camera

Note: Do not use two camera with the same I2C address。

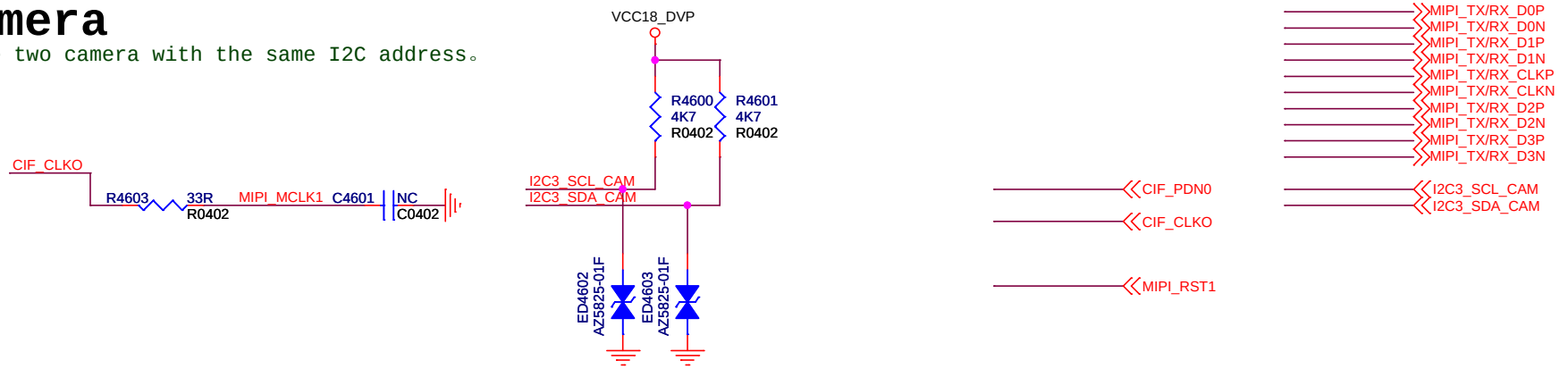

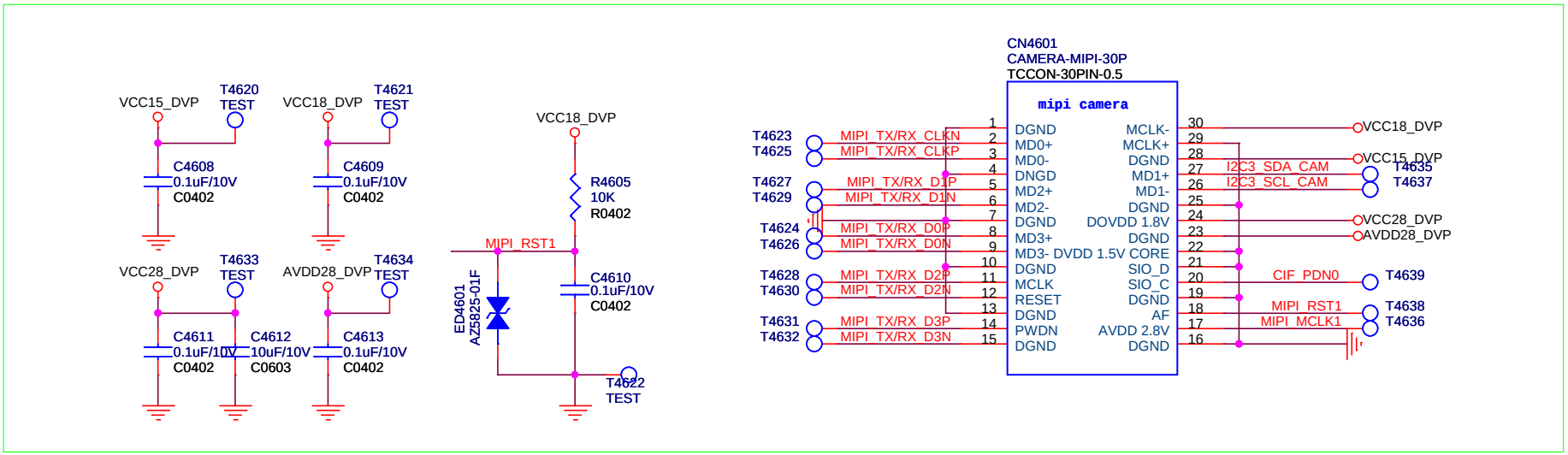

Haier	Haier Multimedia Co.,LTD.	
Title	HAIER-RK3288-KitchenHub	
Size A4	Document Number <Doc>	Rev 1.1
Date: Friday, July 20, 2018	Sheet 20 of 26	

LVDS Panel

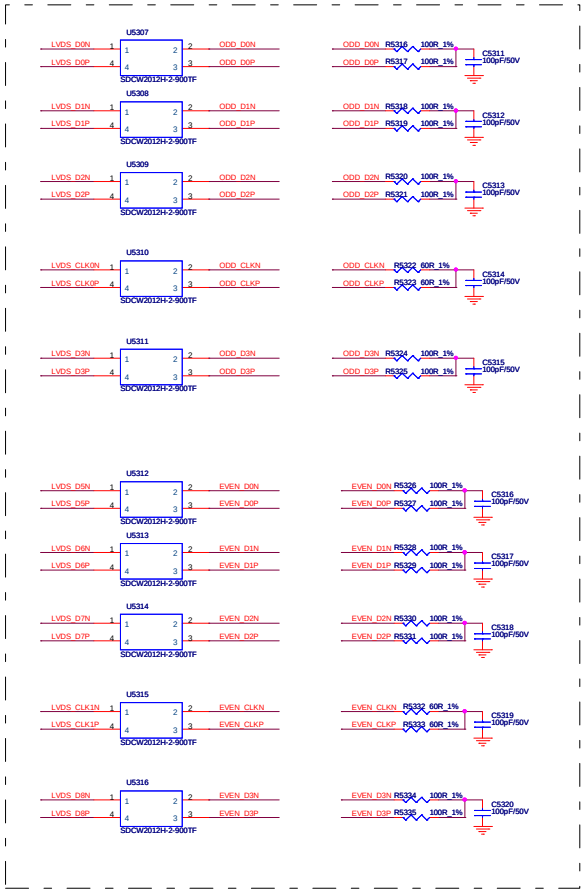

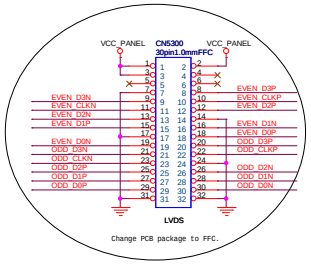

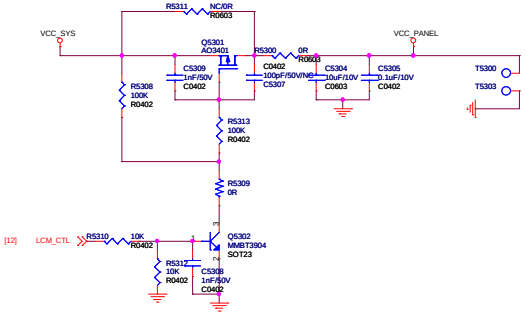

Touch

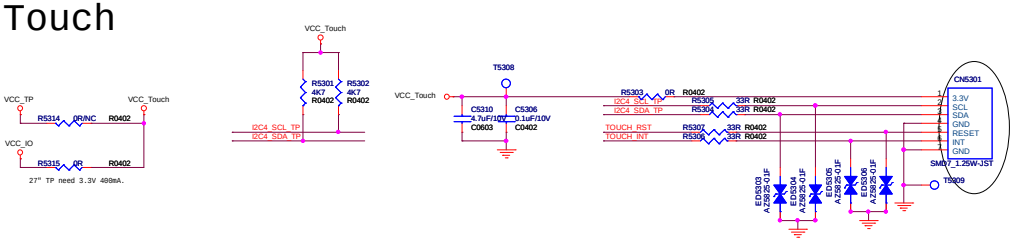

NOTE:VCC_TP default is 1.8V SW configure to 3.3V needed
R5303 is added

Haier	Haier Multimedia Co.,LTD.	
Title: HAIER-RK3288-KitchenHub		
Size: Custom<Doc>	Document Number	Rev: 1.1
Date: Saturday, September 29, 2018	Sheet 21 of 26	

Zwave module

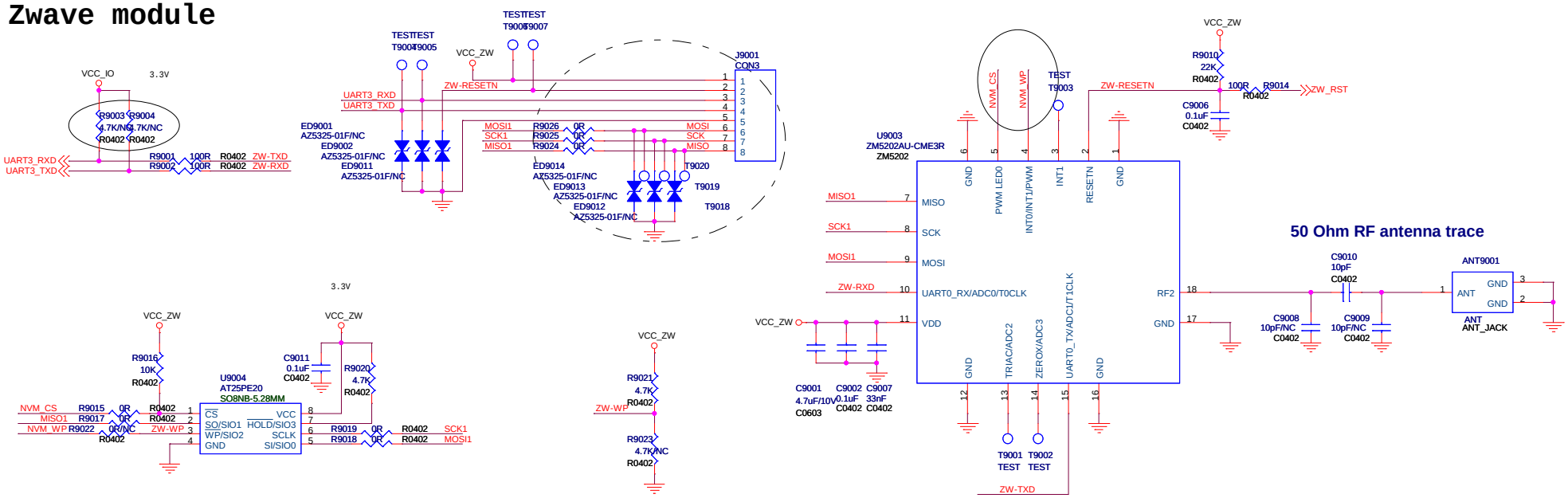

Zigbee module

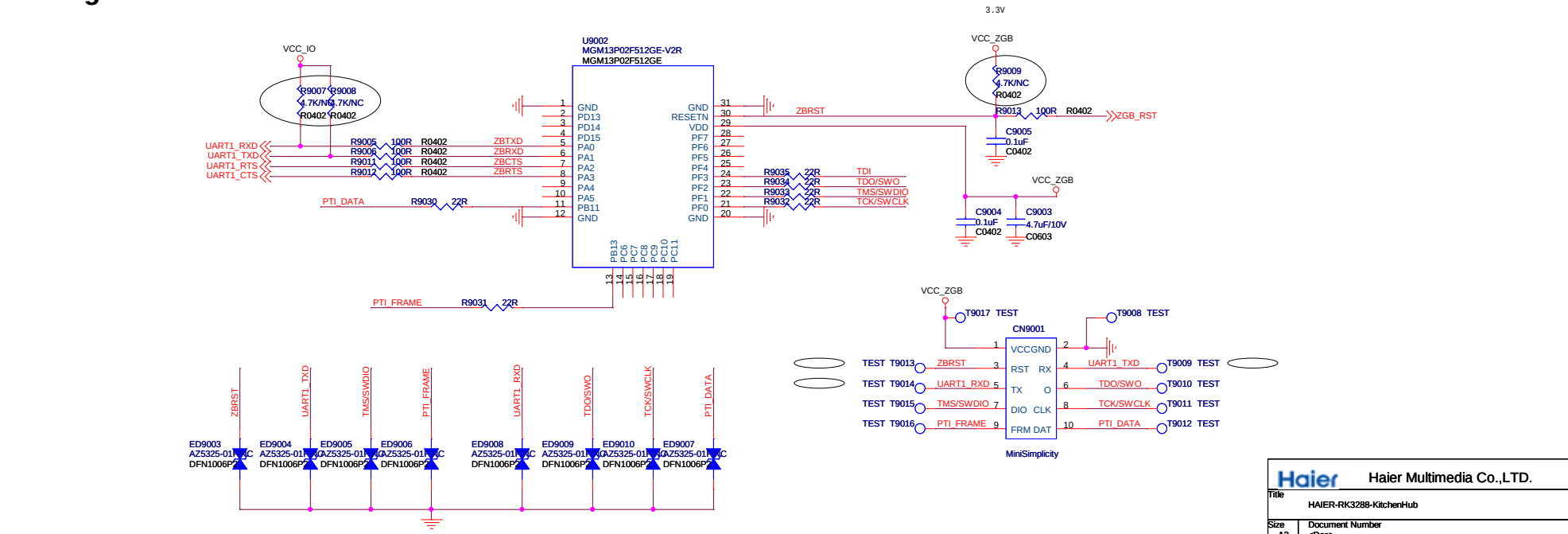

Haier Multimedia Co.,LTD.

Title	HAIER-RK3288-KitchenHub	
Size A3	Document Number <Doc>	Rev 1.1
Date: Saturday, September 29, 2018	Sheet 22 of 26	

WIFI/BT module

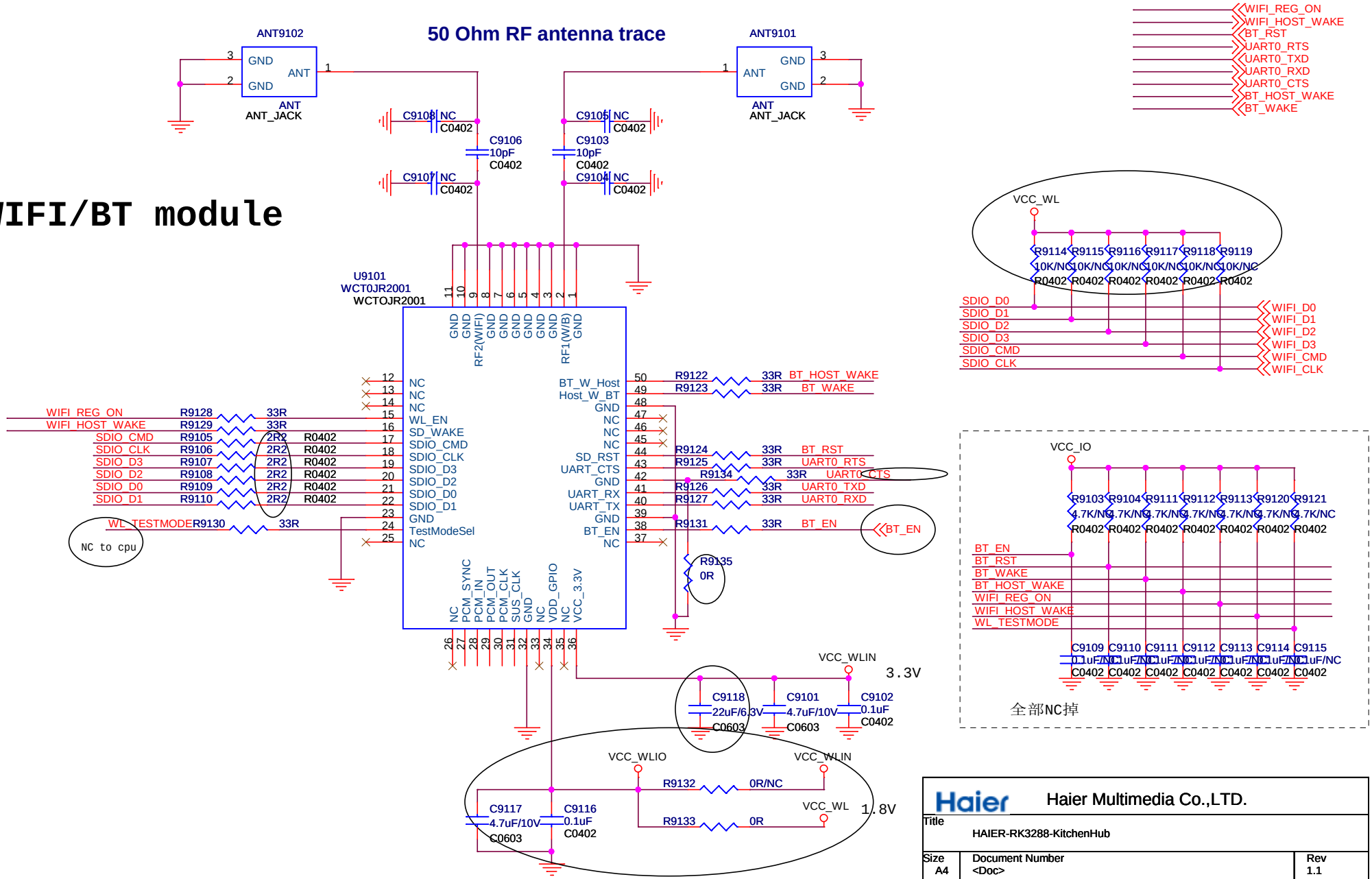

Haier	Haier Multimedia Co.,LTD.	
Title	HAIER-RK3288-KitchenHub	
Size A4	Document Number <Doc>	Rev 1.1
Date: Friday, July 20, 2018	Sheet 23 of 26	

RF

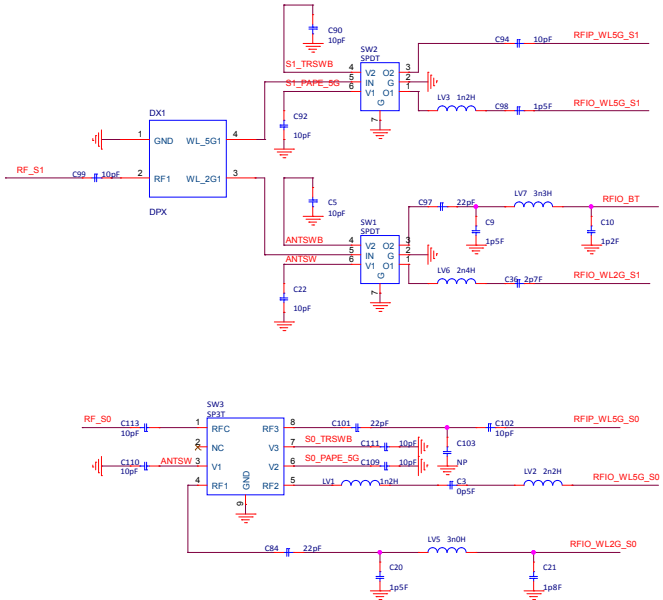

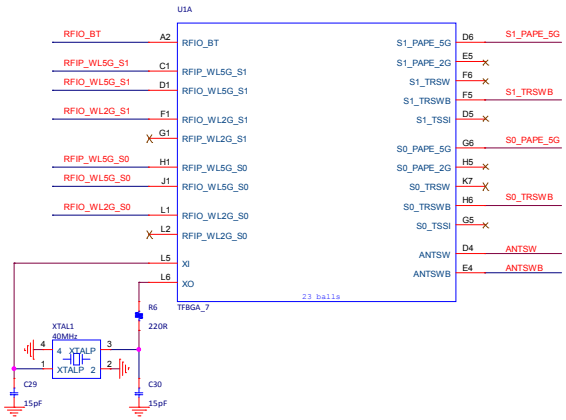

Interface & GPIO

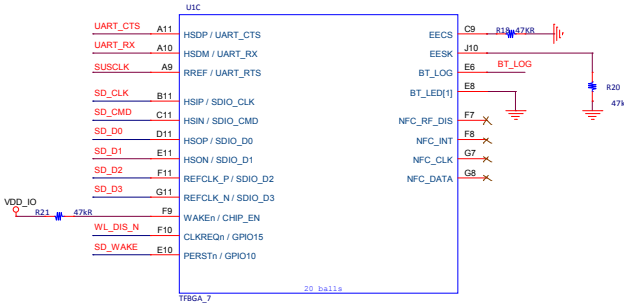

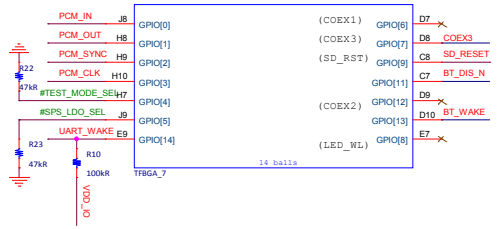

Power & GND

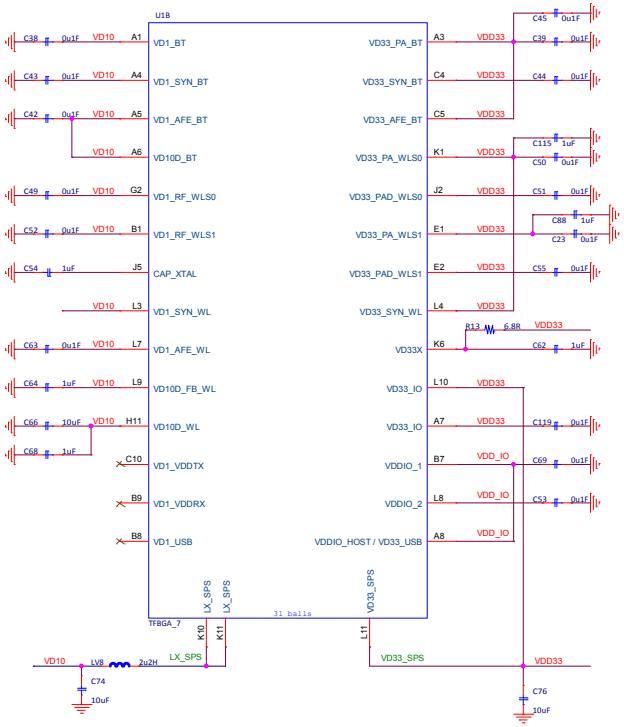

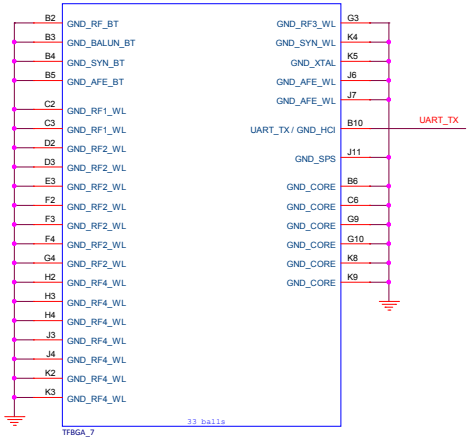

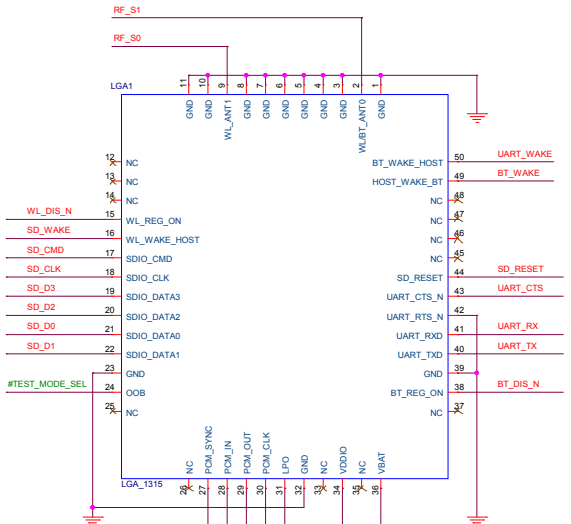

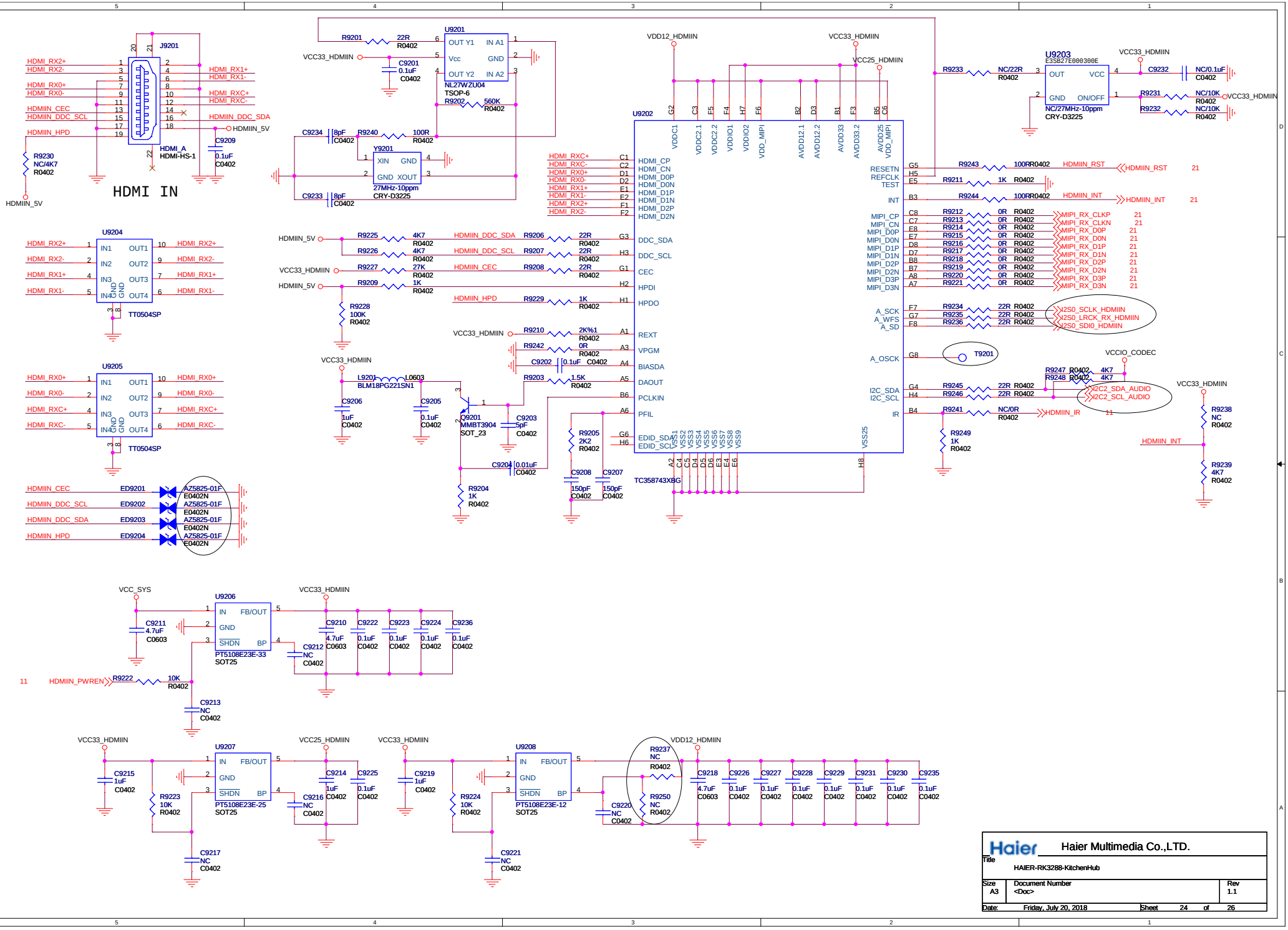
HDMI IN
J9201
HDMI_A
HDMI-HS-1
HDMI_RX2+
HDMI_RX2-
HDMI_RX0+
HDMI_RX0-
HDMIIN_CEC
HDMIIN_DDC_SCL
HDMIIN_HPD
HDMI_RX1+
HDMI_RX1-
HDMI_RXC+
HDMI_RXC-
HDMIIN_DDC_SDA
HDMIIN_5V
R9230
NC/4K7
R0402
C9209
0.1uF
C0402
U9201
NL27WZU04
TSOP-6
R9201
22R
R0402
R9202
560K
R0402
C9201
0.1uF
C0402
VCC33_HDMIIN
C9234
8pF
C0402
C9233
8pF
C0402
Y9201
27MHz-10ppm
CRY-D3225
R9240
100R
R0402
U9202
HDMI_CP
HDMI_CN
HDMI_D0P
HDMI_D0N
HDMI_D1P
HDMI_D1N
HDMI_D2P
HDMI_D2N
DDC_SDA
DDC_SCL
CEC
HPDI
HPDO
REXT
VPGM
BIASDA
DAOUT
PCLKIN
PFIL
EDID_SDA
EDID_SCL
TC358743XBG
VDD12_HDMIIN
VCC25_HDMIIN
RESETN
REFCLK
TEST
INT
MIPI_CP
MIPI_CN
MIPI_D0P
MIPI_D0N
MIPI_D1P
MIPI_D1N
MIPI_D2P
MIPI_D2N
MIPI_D3P
MIPI_D3N
A_SCK
A_WFS
A_SD
A_OSCK
I2C_SDA
I2C_SCL
IR
U9203
E3SB27E000300E
NC/27MHz-10ppm
CRY-D3225
R9233
NC/22R
R0402
C9232
NC/0.1uF
C0402
R9231
NC/10K
R0402
R9232
NC/10K
R0402
R9243
100R
R0402
HDMIIN_RST
R9211
1K
R0402
R9244
100R
R0402
HDMIIN_INT
R9212
R9213
R9214
R9215
R9216
R9217
R9218
R9219
R9220
R9221
0R
R0402
MIPI_RX_CLKP
MIPI_RX_CLKN
MIPI_RX_D0P
MIPI_RX_D0N
MIPI_RX_D1P
MIPI_RX_D1N
MIPI_RX_D2P
MIPI_RX_D2N
MIPI_RX_D3P
MIPI_RX_D3N
R9234
R9235
R9236
22R
R0402
I2S0_SCLK_HDMIIN
I2S0_LRCK_RX_HDMIIN
I2S0_SDI0_HDMIIN
T9201
R9247
R9248
4K7
R0402
I2C2_SDA_AUDIO
I2C2_SCL_AUDIO
R9245
R9246
22R
R0402
R9241
NC/0R
R0402
HDMIIN_IR
R9249
1K
R0402
VCCIO_CODEC
VCC33_HDMIIN
R9238
NC
R0402
R9239
4K7
R0402
HDMIIN_INT
U9204
TT0504SP
U9205
TT0504SP
HDMIIN_CEC
HDMIIN_DDC_SCL
HDMIIN_DDC_SDA
HDMIIN_HPD
ED9201
ED9202
ED9203
ED9204
AZ5825-01F
E0402N
R9225
R9226
4K7
R0402
R9206
R9207
22R
R0402
R9227
27K
R0402
R9208
R9209
1K
R0402
R9228
100K
R0402
R9229
R9210
2K%1
R0402
R9242
0R
R0402
C9202
0.1uF
C0402
R9203
1.5K
R0402
L9201
BLM18PG221SN1
L0603
C9206
1uF
C0402
C9205
0.1uF
C0402
Q9201
MMBT3904
SOT_23
C9203
5pF
C0402
C9204
0.01uF
C0402
R9204
1K
R0402
R9205
2K2
R0402
C9208
150pF
C0402
C9207
150pF
C0402
VSS1
VSS2
VSS3
VSS4
VSS5
VSS6
VSS7
VSS8
VSS9
VSS25
VCC_SYS
U9206
PT5108E23E-33
SOT25
C9211
4.7uF
C0603
C9212
NC
C0402
C9210
4.7uF
C0603
C9222
C9223
C9224
C9236
0.1uF
C0402
R9222
10K
R0402
C9213
NC
C0402
HDMIIN_PWREN
U9207
PT5108E23E-25
SOT25
C9215
1uF
C0402
R9223
10K
R0402
C9217
NC
C0402
C9216
NC
C0402
C9214
1uF
C0402
C9225
0.1uF
C0402
U9208
PT5108E23E-12
SOT25
C9219
1uF
C0402
R9224
10K
R0402
C9221
NC
C0402
C9220
NC
C0402
R9237
NC
R0402
R9250
NC
R0402
C9218
4.7uF
C0603
C9226
C9227
C9228
C9229
C9231
C9230
C9235
0.1uF
C0402
Haier
Haier Multimedia Co.,LTD.
Title
HAIER-RK3288-KitchenHub
Size
A3
Document Number
<Doc>
Rev
1.1
Date:
Friday, July 20, 2018
Sheet
24
of
26

CODEC

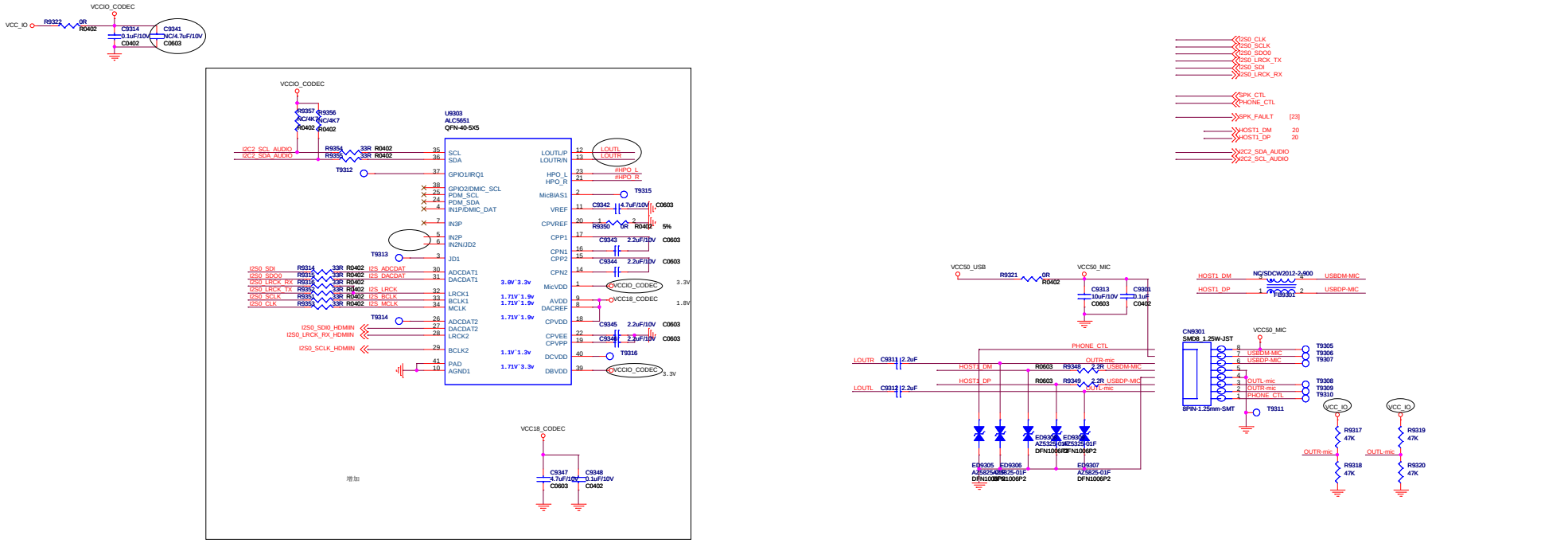

SPEAKER

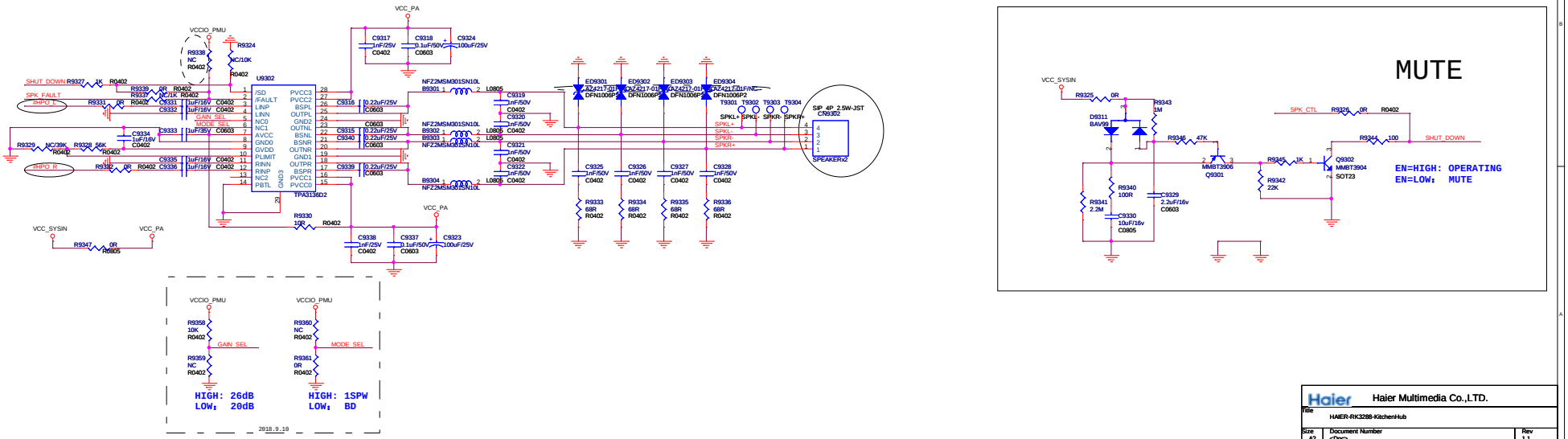

Haier Haier Multimedia Co.,LTD.

Title	HAIER-RK3288-KitchenHub	
Size A2	Document Number <Doc>	Rev 1.1
Date: Friday, September 21, 2018	Sheet 25 of 26	

Sensors & MC-UART Connectors

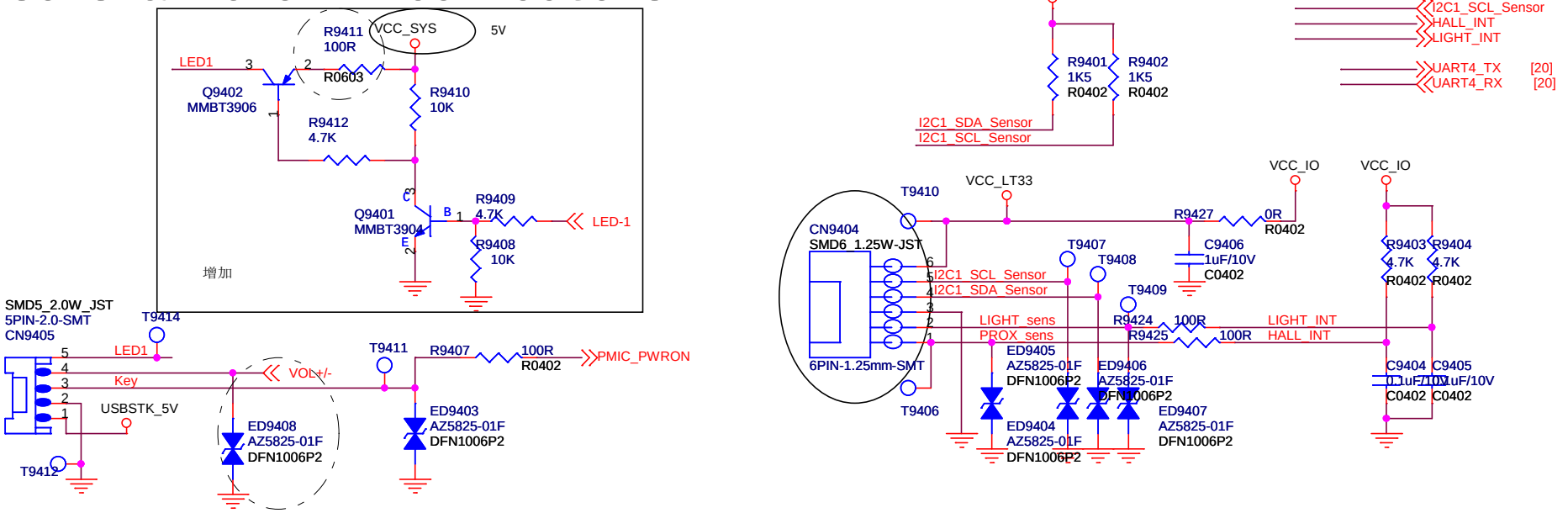

MC-UART Connector

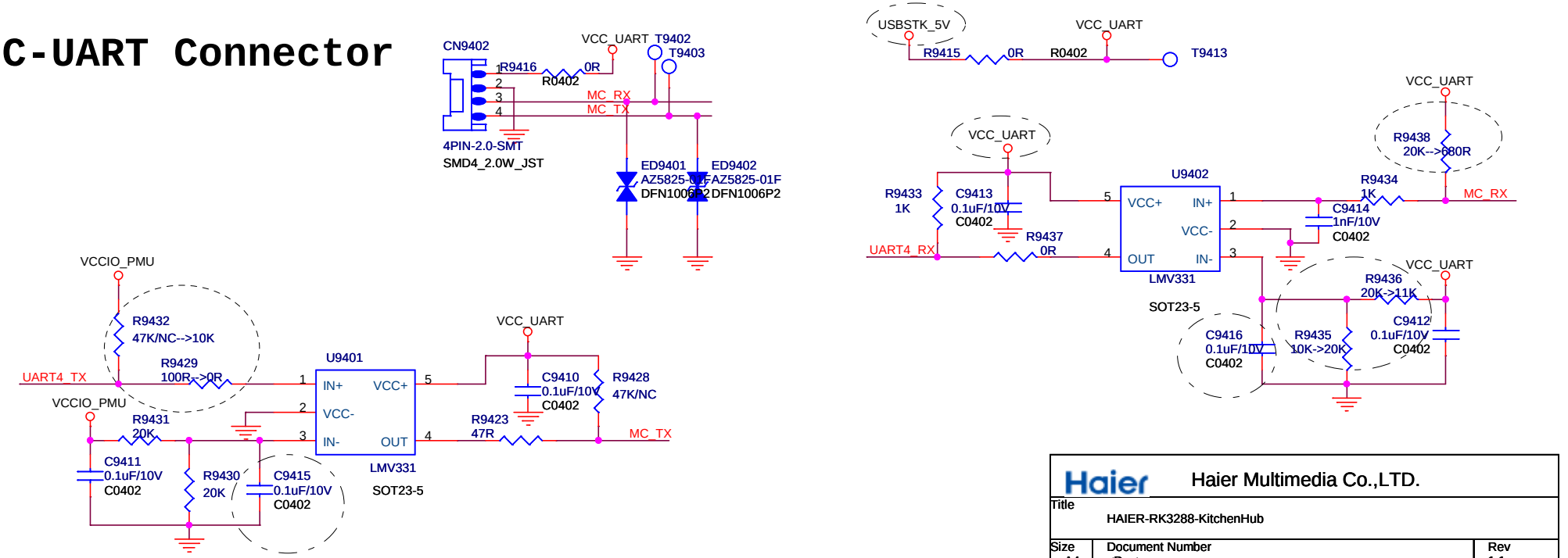

Haier	Haier Multimedia Co.,LTD.	
Title	HAIER-RK3288-KitchenHub	
Size A4	Document Number <Doc>	Rev 1.1
Date: Friday, November 02, 2018	Sheet 26 of 26	

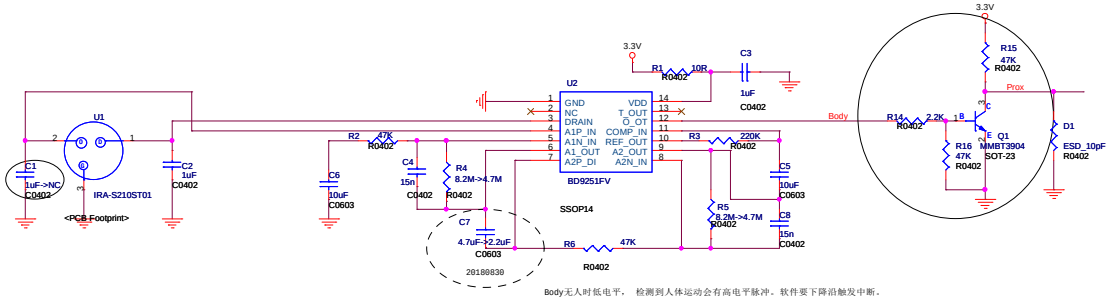

Body无人时低电平， 检测到人体运动会有高电平脉冲。软件要下降沿触发中断。

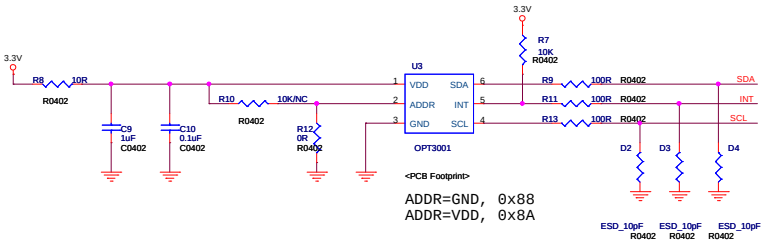

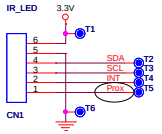

Title	<Title>	
Size C	Document Number <Doc>	Rev <RevCode>
Date: Thursday, August 30, 2018	Sheet 1 of 1	

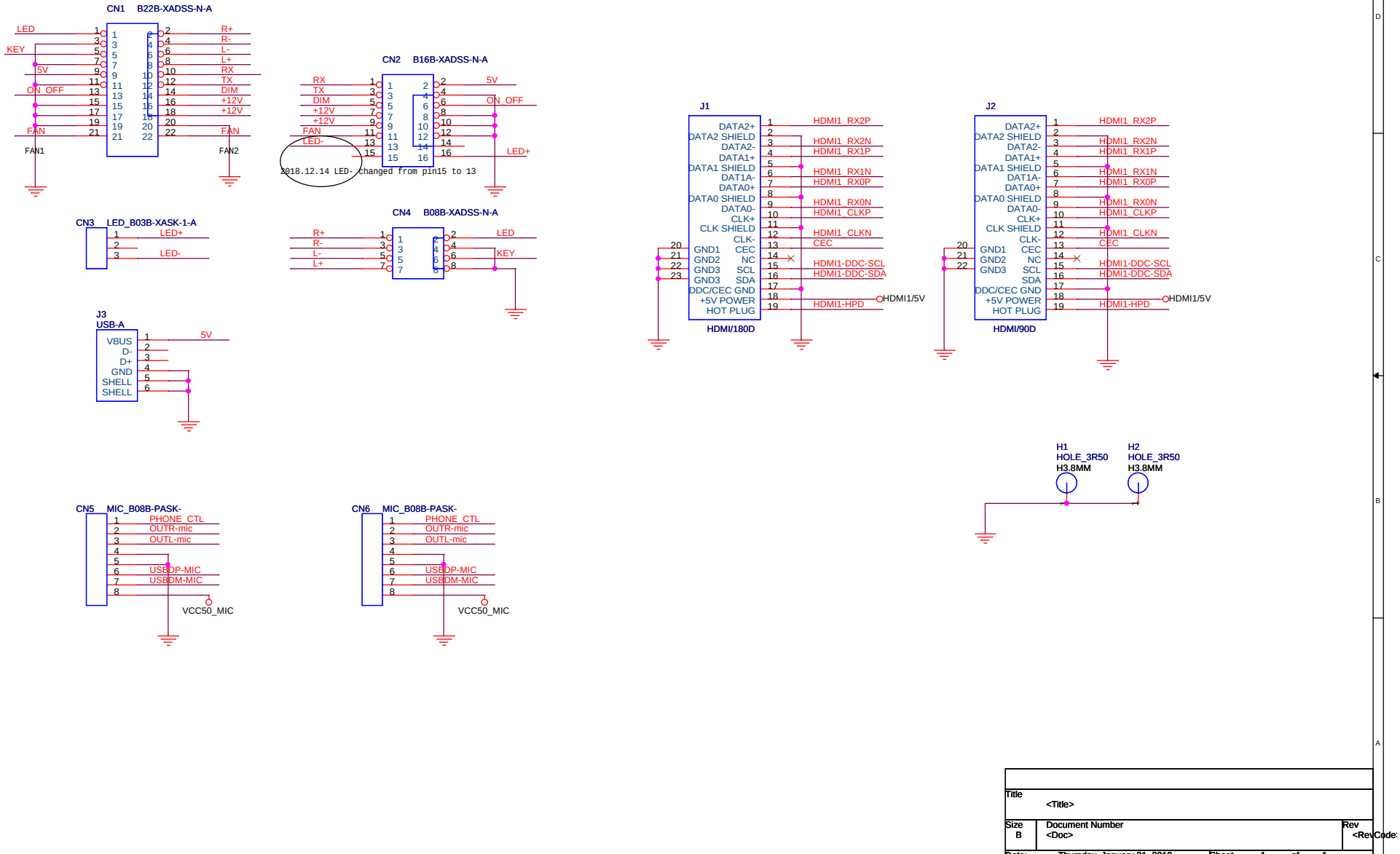
CN1 B22B-XADSS-N-A
LED
KEY
5V
ON_OFF
FAN
FAN1
R+
R-
L-
L+
RX
TX
DIM
+12V
+12V
FAN
FAN2
CN2 B16B-XADSS-N-A
RX
TX
DIM
+12V
+12V
FAN
LED-
5V
ON_OFF
LED+
2018.12.14 LED- changed from pin15 to 13
CN3 LED_B03B-XASK-1-A
LED+
LED-
CN4 B08B-XADSS-N-A
R+
R-
L-
L+
LED
KEY
J1
DATA2+
DATA2 SHIELD
DATA2-
DATA1+
DATA1 SHIELD
DAT1A-
DATA0+
DATA0 SHIELD
DATA0-
CLK+
CLK SHIELD
CLK-
GND1
GND2
GND3
DDC/CEC GND
+5V POWER
HOT PLUG
CEC
NC
SCL
SDA
HDMI1_RX2P
HDMI1_RX2N
HDMI1_RX1P
HDMI1_RX1N
HDMI1_RX0P
HDMI1_RX0N
HDMI1_CLKP
HDMI1_CLKN
CEC
HDMI1-DDC-SCL
HDMI1-DDC-SDA
HDMI1-HPD
HDMI1/5V
HDMI/180D
J2
HDMI/90D
J3
USB-A
VBUS
D-
D+
GND
SHELL
SHELL
5V
CN5 MIC_B08B-PASK-
CN6 MIC_B08B-PASK-
PHONE_CTL
OUTR-mic
OUTL-mic
USBDP-MIC
USBDM-MIC
VCC50_MIC
H1
HOLE_3R50
H3.8MM
H2
HOLE_3R50
H3.8MM
Title
<Title>
Size
B
Document Number
<Doc>
Rev
<RevCode>
Date:
Thursday, January 31, 2019
Sheet
1
of
1

Digital MIC Circuit

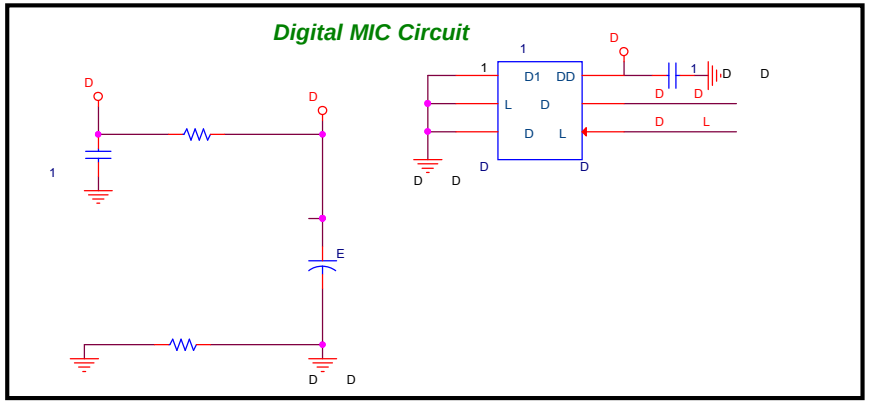

Pull High

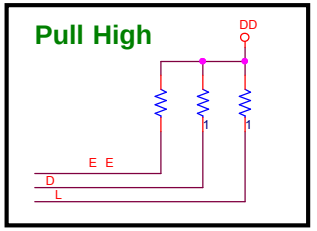

Realtek PC Camera RTS5842

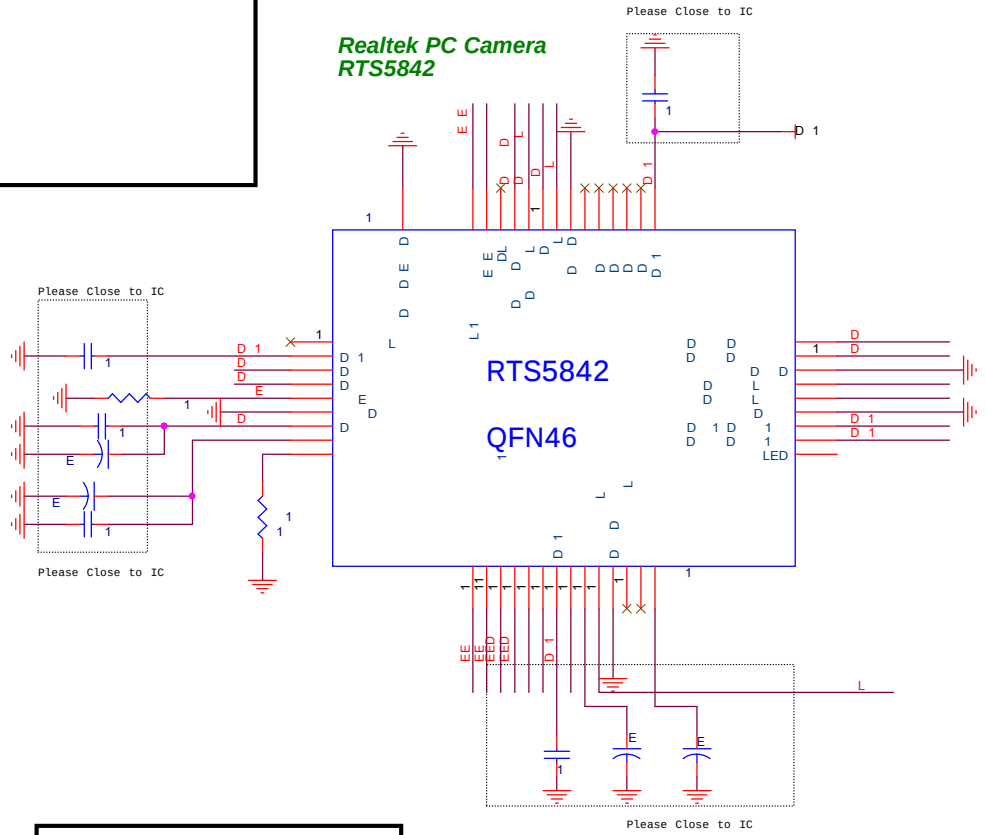

Power For Sensor

Off-Page Sensor Interface

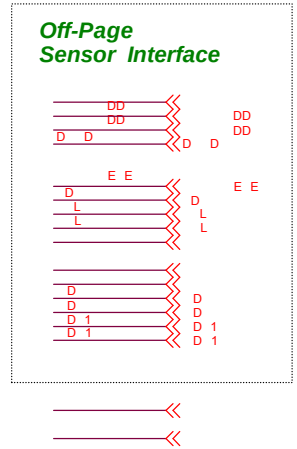

USB Connector

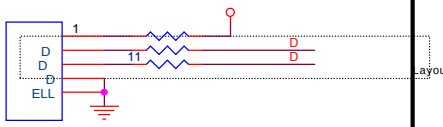

DM/DP differential impedence Zdiff = 90 ohm
R9/R10 Footprint is compatibal both to Choke & Resister!

GPIO Function
GPIO0: SF WP control
GPIO_AL[1]: Sensor Reset control

SPI Interface

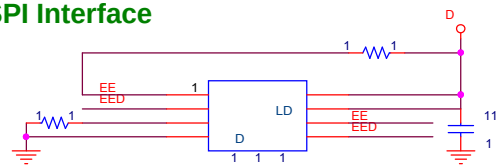

Reserved

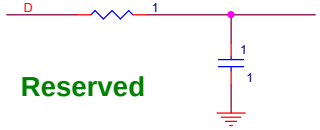

REALTEK Semiconductor Corp.

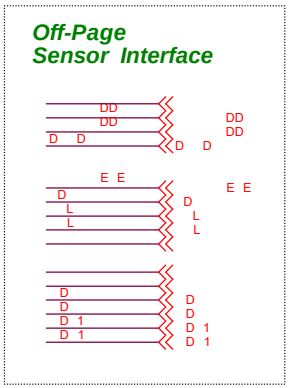

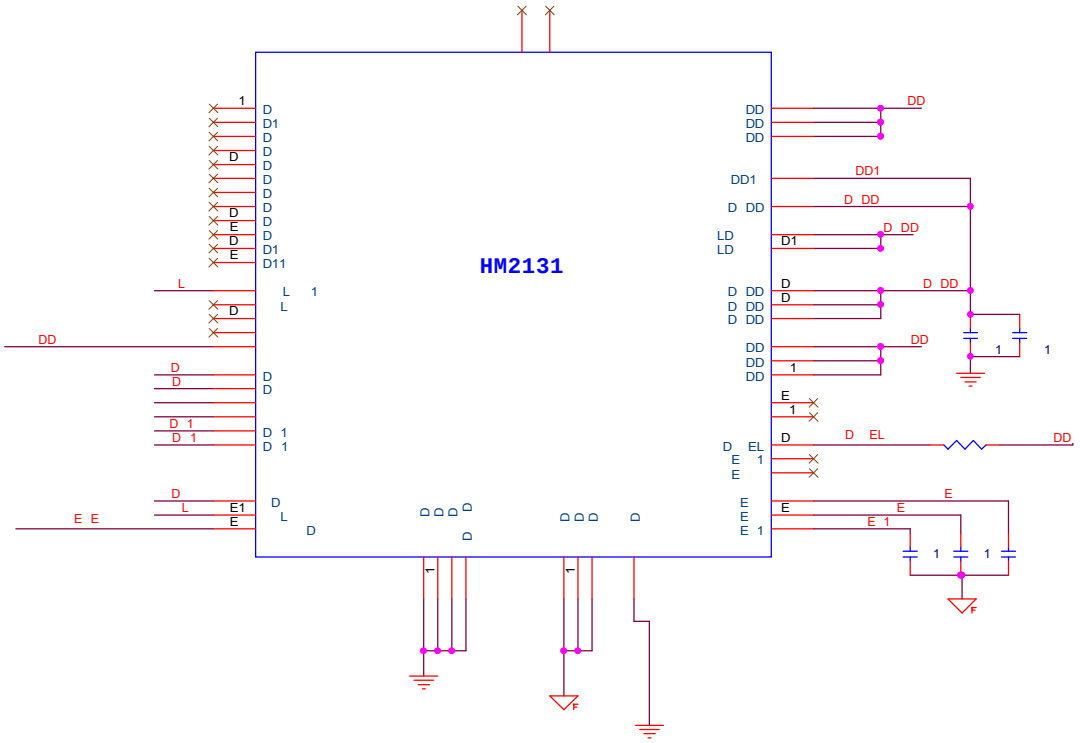

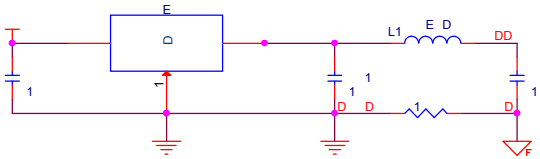

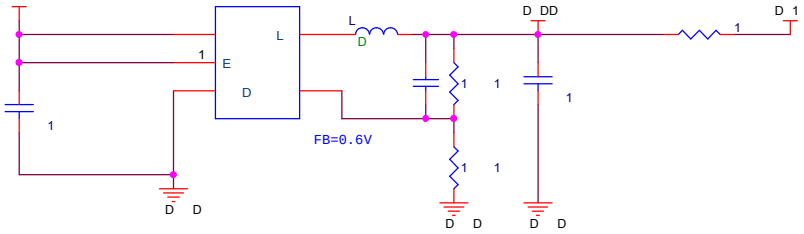

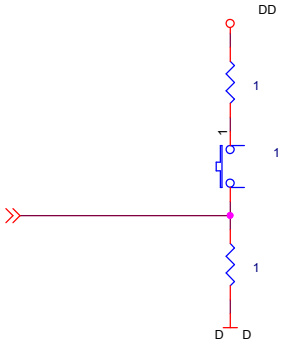

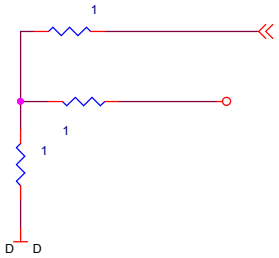

REALTEK Semiconductor Corp.		
1 1	E	
	E L E	
	D	1
D1	1	1

The Circuit is applied to RTS5842_QFN46

Version	Date	Description
V1.0		Initial Version

REALTEK *Semiconductor Corp.*

E L E

D

1

D1

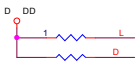

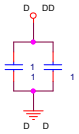

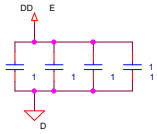

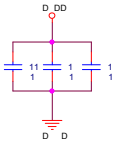

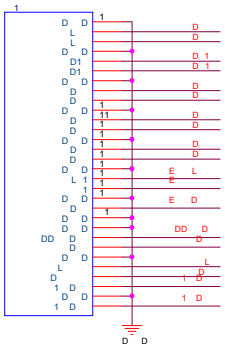

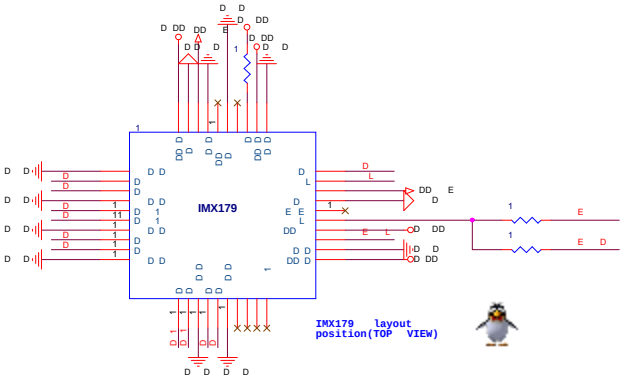

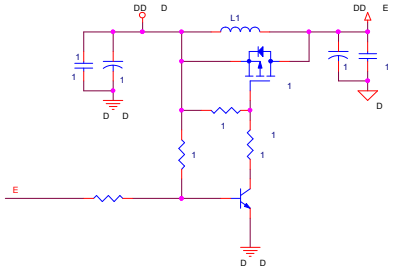

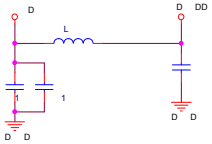

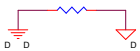

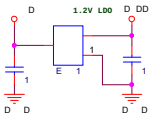

DUNHOO TECHNOLOGY CO.,LTD.		
D	IMX179 MIPI	V10

REVISION RECORD			
LTR	ECO NO:	APPROVED:	DATE:

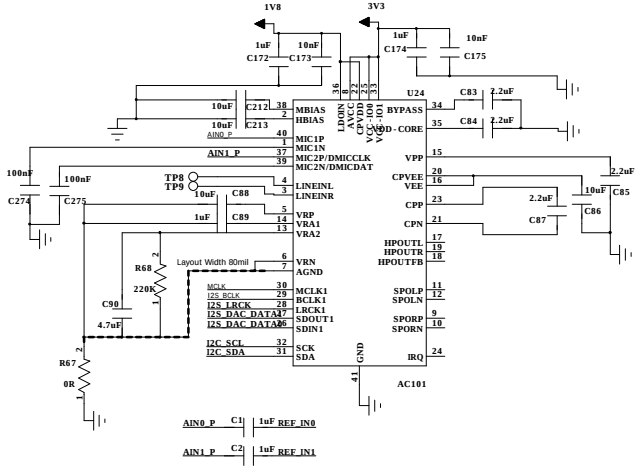

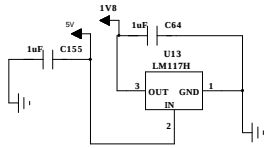

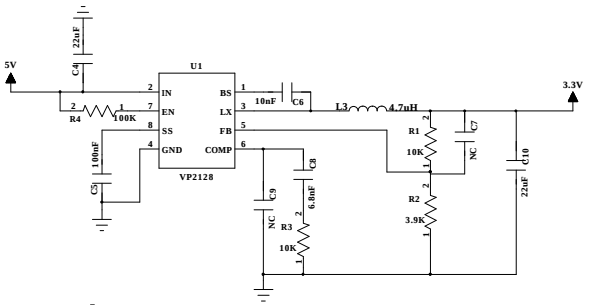

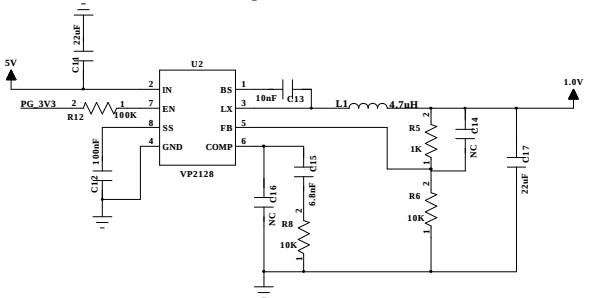

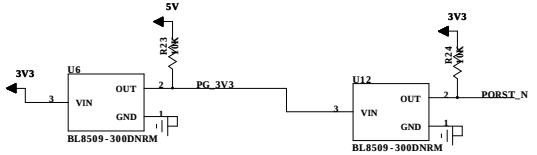

DRAWN:	DATED:	COMPANY:			
CHECKED:	DATED:	TITLE:			
QUALITY CONTROL:	DATED:	CODE:	SIZE: C	DRAWING NO:	REV:
RELEASED:	DATED:	SCALE:	SHEET: 1 OF 3		

REVISION RECORD			
LTR	ECO NO:	APPROVED:	DATE:

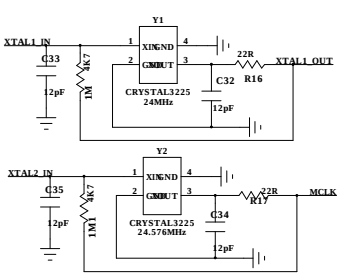

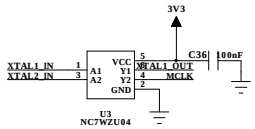

MICROPHONES

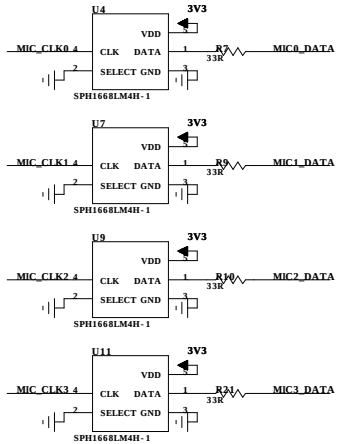

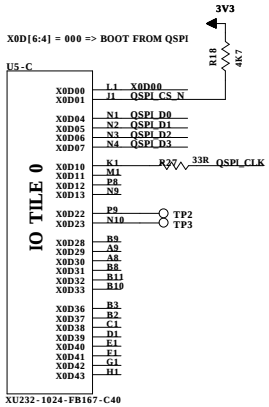

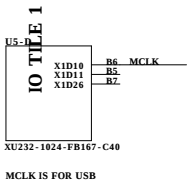

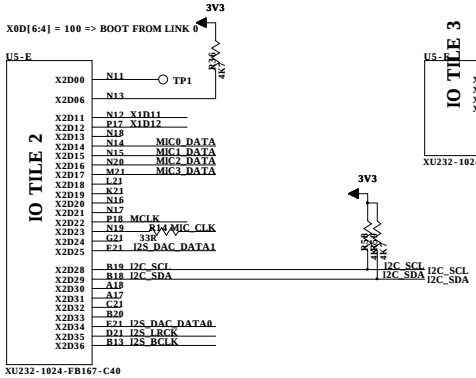

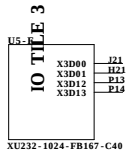

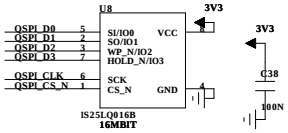

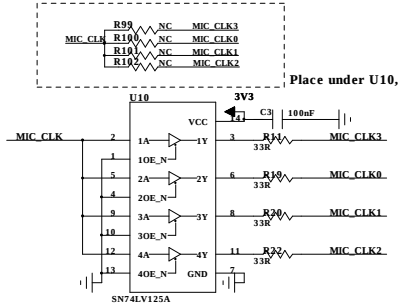

DRAWN:	DATED:	COMPANY:			
		TITLE:			
CHECKED:	DATED:	CODE:	SIZE: C	DRAWING NO:	REV:
QUALITY CONTROL:	DATED:				
RELEASED:	DATED:	SCALE:		SHEET: 2 OF 3	

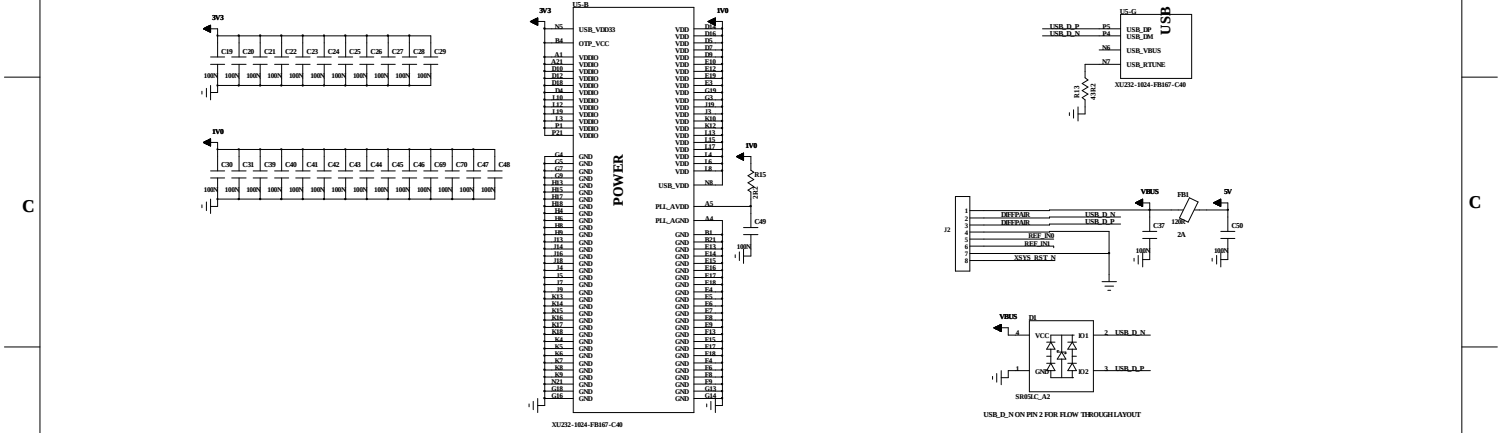

REVISION RECORD			
LTR	ECO NO:	APPROVED:	DATE:

COMPANY:					
TITLE:					
DRAWN:	DATED:				
CHECKED:	DATED:	CODE:	SIZE: C	DRAWING NO:	REV:
QUALITY CONTROL:	DATED:				
RELEASED:	DATED:	SCALE:		SHEET: 3 OF 3	

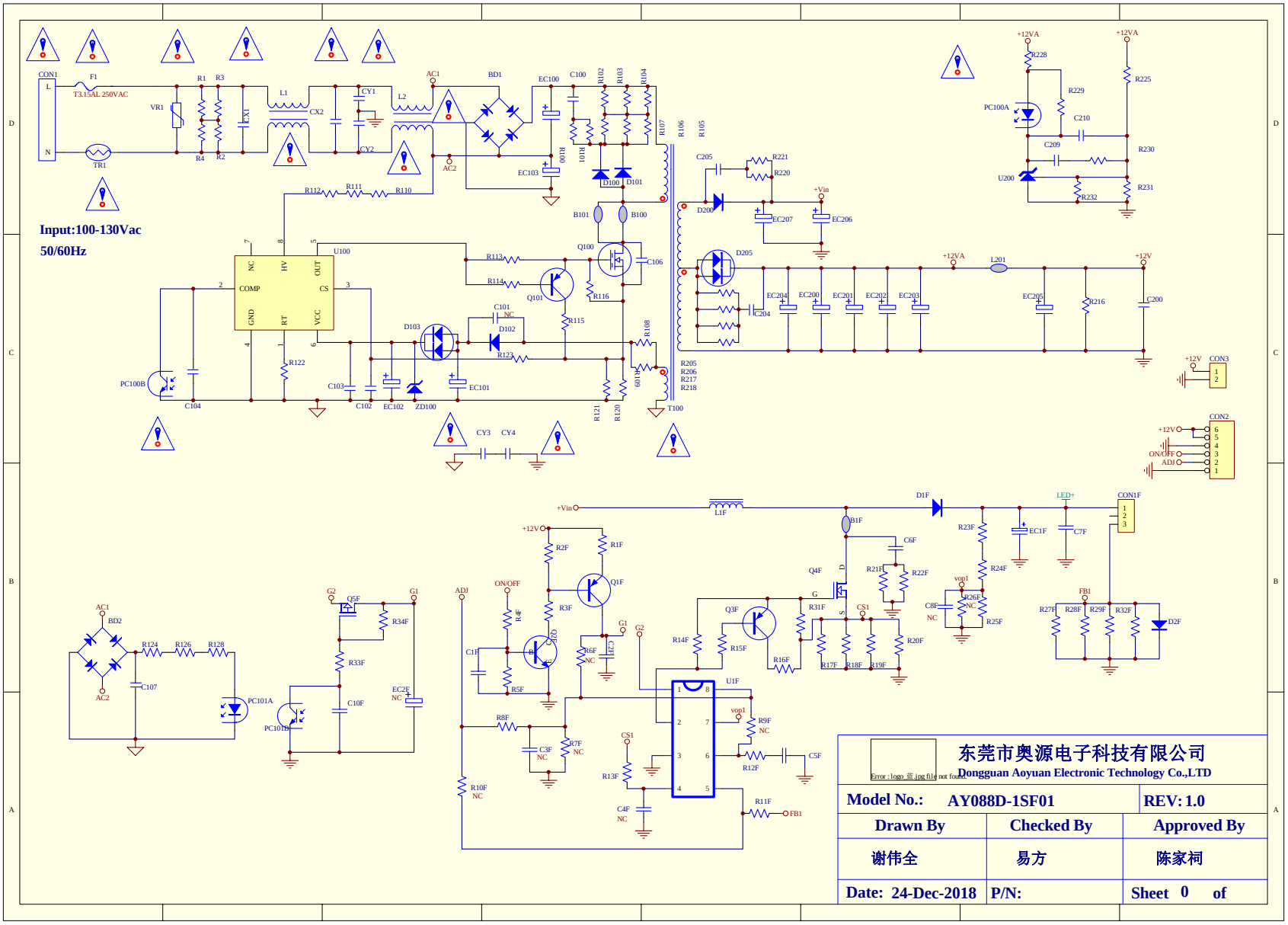

东莞市奥源电子科技有限公司 Dongguan Aoyuan Electronic Technology Co.,LTD		
Model No.: AY088D-1SF01		REV: 1.0
Drawn By	Checked By	Approved By
谢伟全	易方	陈家祠
Date: 24-Dec-2018	P/N:	Sheet 0 of

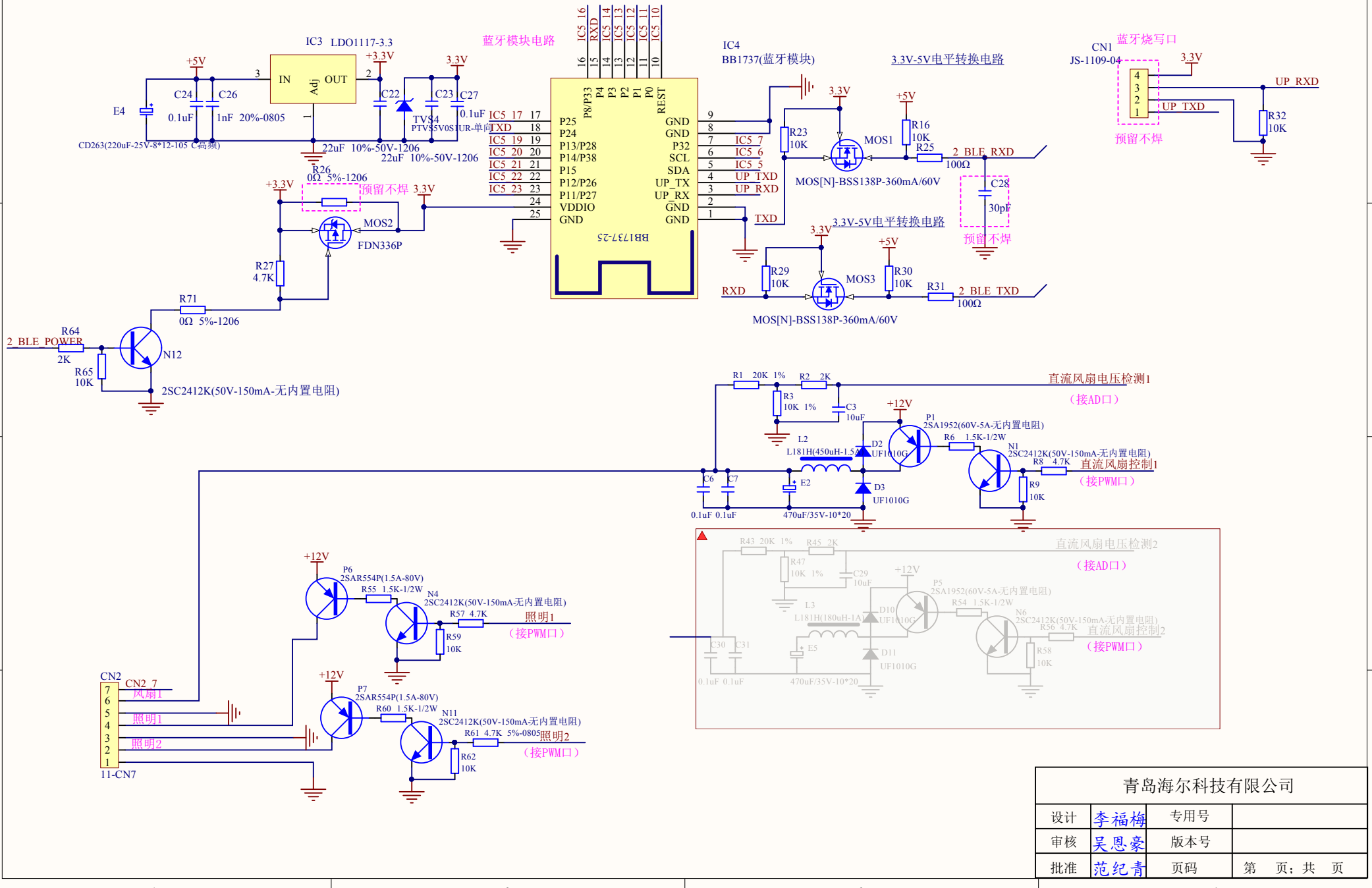
IC3 LDO1117-3.3
蓝牙模块电路
IC4
BB1737(蓝牙模块)
3.3V-5V电平转换电路
CN1
JS-1109-04
蓝牙烧写口
预留不焊
MOS[N]-BSS138P-360mA/60V
FDN336P
2SC2412K(50V-150mA-无内置电阻)
2SA1952(60V-5A-无内置电阻)
L181H(450uH-1.5A)
L181H(180uH-1A)
UF1010G
2SAR554P(1.5A-80V)
直流风扇电压检测1
（接AD口）
直流风扇控制1
（接PWM口）
直流风扇电压检测2
直流风扇控制2
照明1
照明2
风扇1
11-CN7
青岛海尔科技有限公司
设计 李福梅 专用号
审核 吴恩豪 版本号
批准 范纪青 页码 第 页；共 页

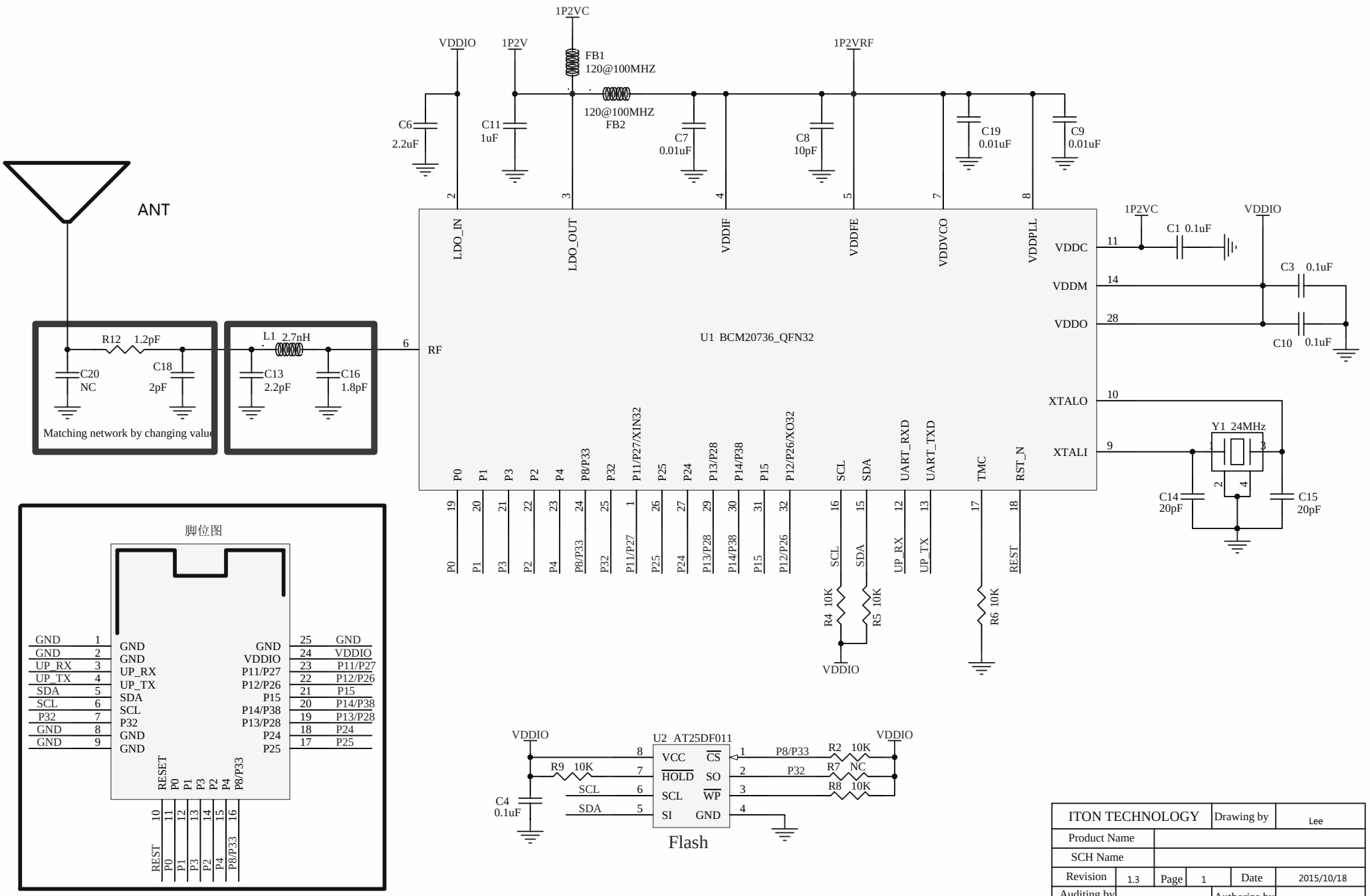
1P2VC
VDDIO
1P2V
FB1
120@100MHZ
120@100MHZ
FB2
1P2VRF
C6
2.2uF
C11
1uF
C7
0.01uF
C8
10pF
C19
0.01uF
C9
0.01uF
ANT
R12 1.2pF
L1 2.7nH
C20
NC
C18
2pF
C13
2.2pF
C16
1.8pF
Matching network by changing value
RF
U1 BCM20736_QFN32
LDO_IN
LDO_OUT
VDDIF
VDDFE
VDDVCO
VDDPLL
VDDC
VDDM
VDDO
XTALO
XTALI
C1 0.1uF
C3 0.1uF
C10 0.1uF
Y1 24MHz
C14
20pF
C15
20pF
P0
P1
P3
P2
P4
P8/P33
P32
P11/P27/XIN32
P25
P24
P13/P28
P14/P38
P15
P12/P26/XO32
SCL
SDA
UART_RXD
UART_TXD
TMC
RST_N
UP_RX
UP_TX
REST
R4 10K
R5 10K
R6 10K
脚位图
GND
GND
UP_RX
UP_TX
SDA
SCL
P32
GND
GND
RESET
P0
P1
P3
P2
P4
P8/P33
VDDIO
P11/P27
P12/P26
P15
P14/P38
P13/P28
P24
P25
U2 AT25DF011
VCC
HOLD
SCL
SI
CS
SO
WP
GND
R9 10K
R2 10K
R7 NC
R8 10K
C4
0.1uF
Flash
ITON TECHNOLOGY
Drawing by
Lee
Product Name
SCH Name
Revision
1.3
Page
1
Date
2015/10/18
Auditing by
Authorize by

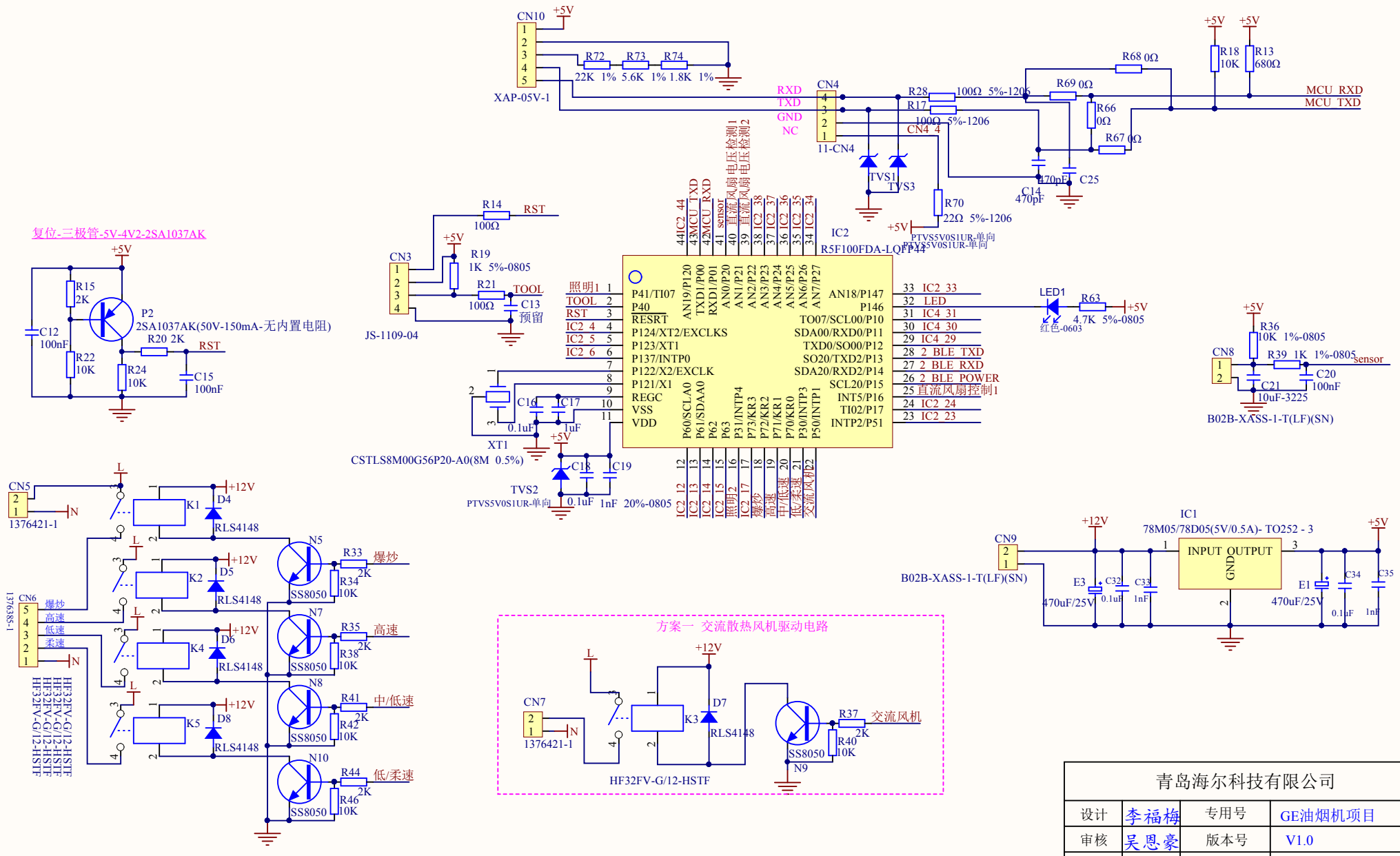

青岛海尔科技有限公司			
设计	李福梅	专用号	GE油烟机项目
审核	吴恩豪	版本号	V1.0
批准	范纪青	页码	第 1 页；共 1 页

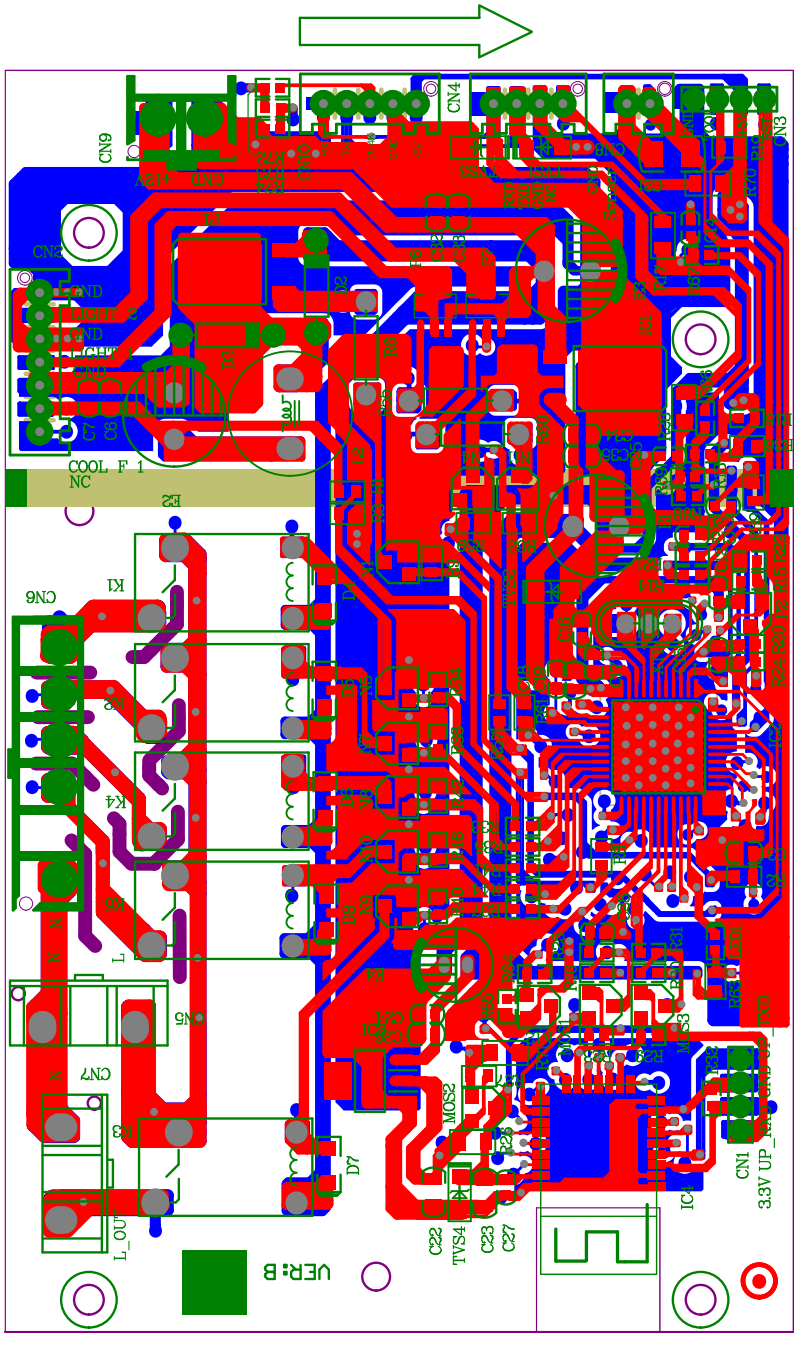
CN9
CN4
CN3
CN2
CN6
CN5
CN7
K1
K4
K5
K3
D3
D2
D7
D8
D9
D10
D11
D12
D13
D14
D15
D16
D17
D18
D19
D20
D21
D22
D23
D24
D25
D26
D27
D28
D29
D30
D31
D32
D33
D34
D35
D36
D37
D38
D39
D40
D41
D42
D43
D44
D45
D46