WM8650 7inch MID IO Board

WMS8122A

Power Tree:

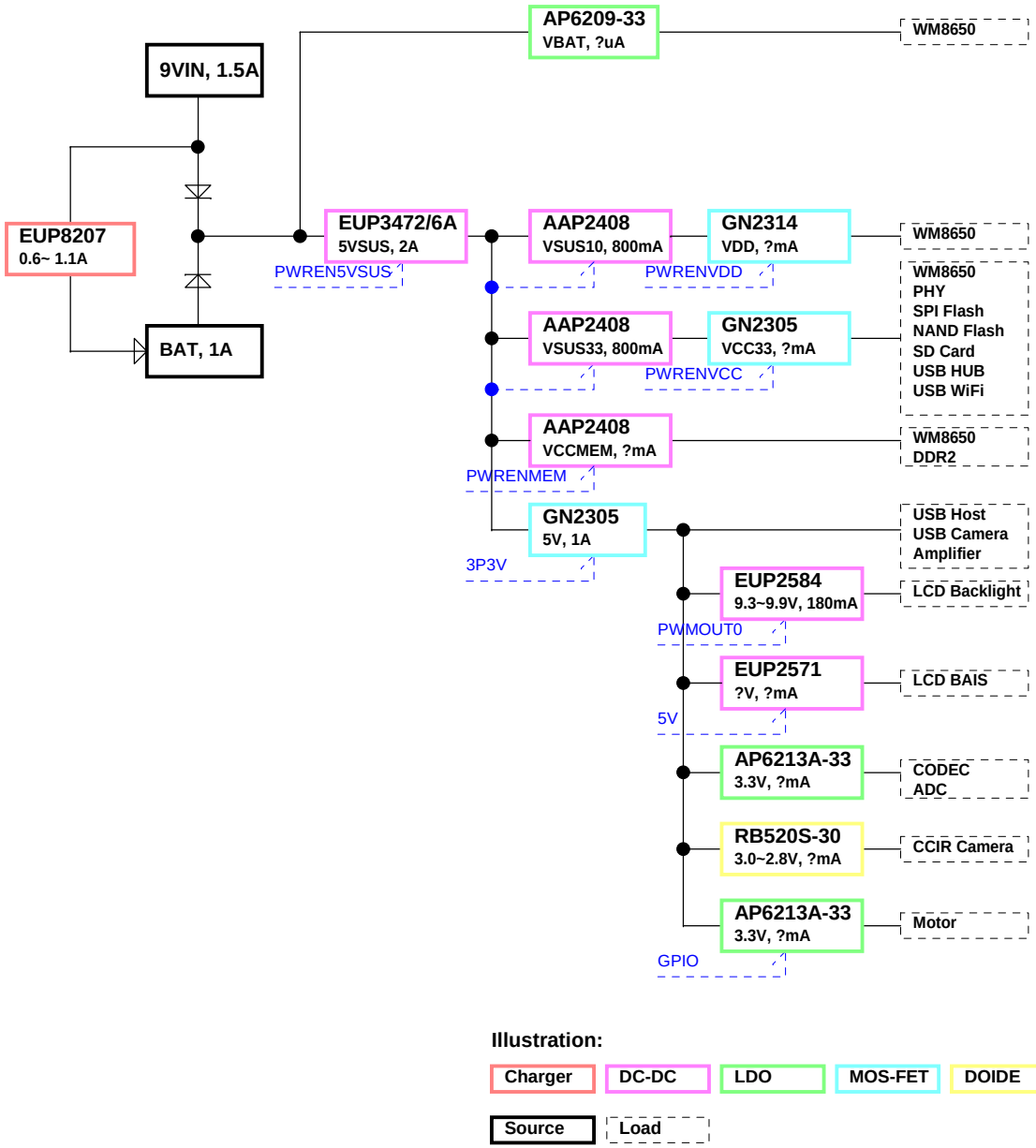

Illustration:

Charger | DC-DC | LDO | MOS-FET | DOIDE

Source | Load

配合模具: 宽格 PC802

TITLE	PAGE
Cover Page	01
Block Diagram	02
Core Board Package	03
DC-IN and Battery	04
Voltage Regulators	05
MicroSD Card	06
30pin CONN	07
USB WiFi/CCIR Camera	08
Ethernet PHY(VT6113)	09
LCD Panel	10
I2S CODEC (VT1603A)	11
G-Sensor & Shake	12
Keypad board	13
Version History	14

WonderMedia Technologies, Inc.

Title: Cover Page

Size: Custom | Document Number: WMS8125B | Rev: 1.0

Date: Tuesday, December 14, 2010 | Sheet 1 of 14

Block Diagram
(7inch MID)

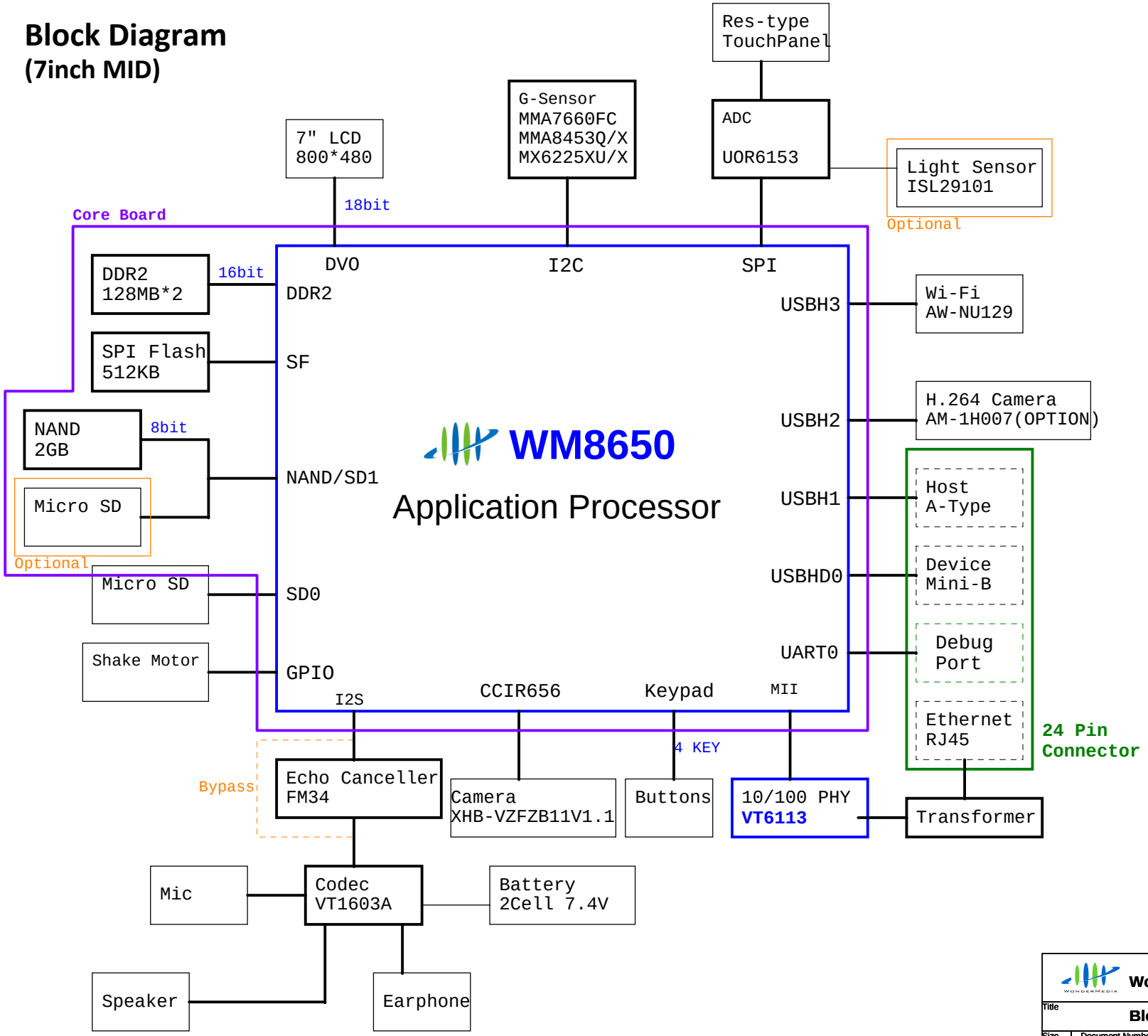

WonderMedia Technologies, Inc.		
Title: Block Diagram		
Size: Custom	Document Number: WMS8125B	Rev: 1.0
Date: Tuesday, December 14, 2010	Sheet 2 of 14	

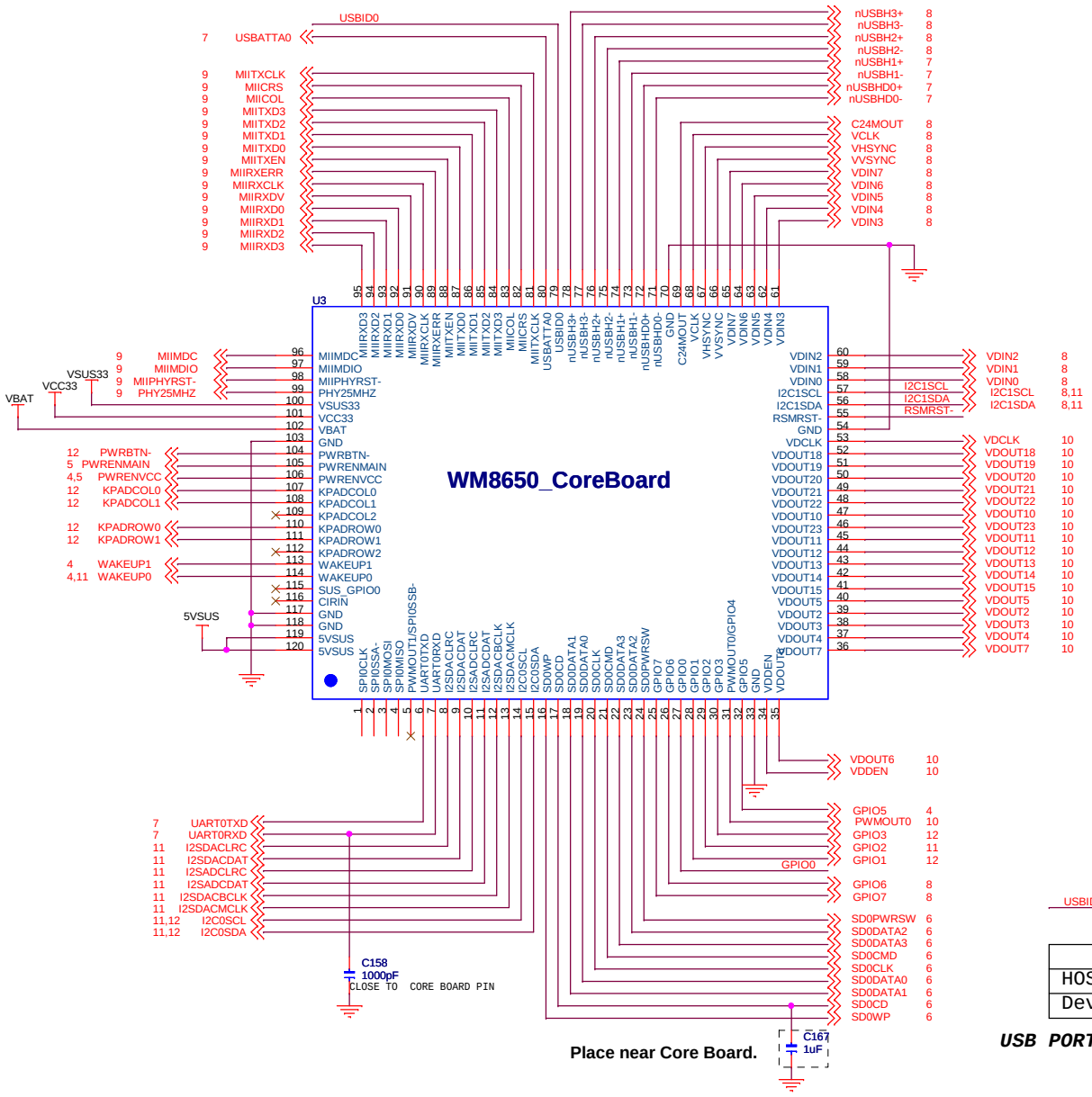

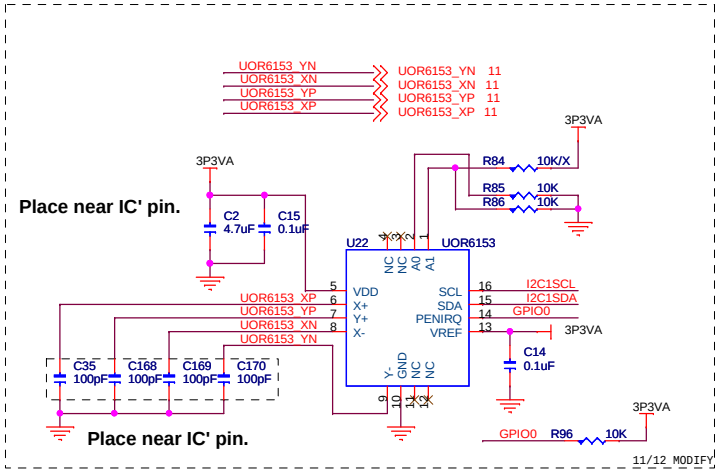

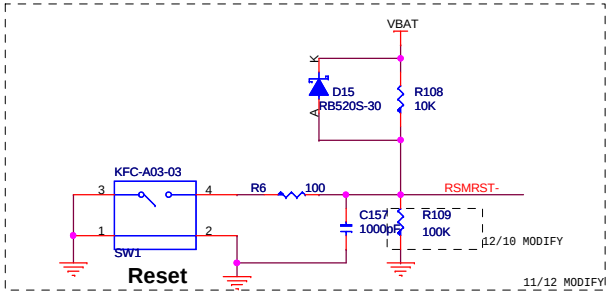

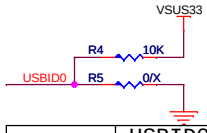

	USBID0
HOST	0
Device	1

USB PORT 0 Configuration Table

WAKEUP0	BAT_LOW Detector
WAKEUP1	DCIN_DET
PWMOUT0	LCD_BL_DIM
PWMOUT1	SPI0SSB-
GPIO0	TOUCH INT2
GPIO1	MOTOR_SHAKE
GPIO2	Touch_INT1
GPIO3	G-Sensor-INT
GPIO4	
GPIO5	Charger_STAT
GPIO6	Wifi_POWER_DN
GPIO7	CAMERA_POWER_DN
SUS_GPIO0	MUTE_GPIO
I2C0	G-Sensor / I2S / VDOUT / EC
I2C1	VDIN
SPI0	Touch Pad

KPADCOL0 - Volume + Key
KPADCOL1 - Volume - Key
KPADROW0 - BACK Key
KPADROW1 - Menu Key

WonderMedia Technologies, Inc.

Title	Core Board Package	
Size: Custom	Document Number: WMS8125B	Rev: 1.0
Date: Wednesday, December 15, 2010	Sheet 3 of 14	

DC-IN and Battery

9V DC Input 1.5A

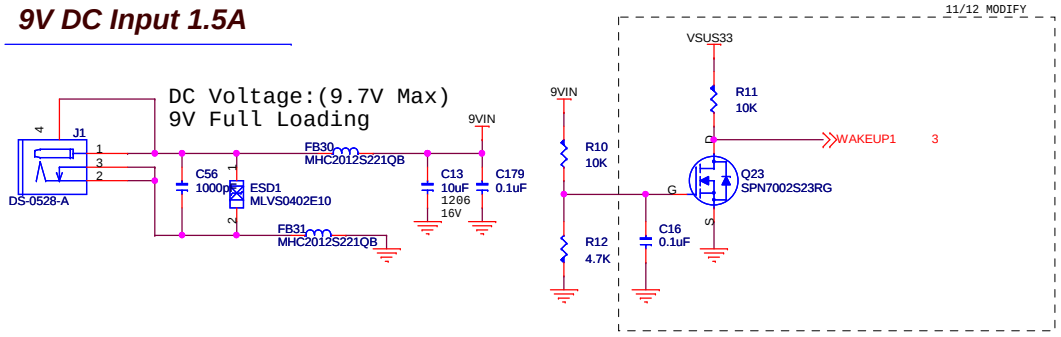

DC Switch

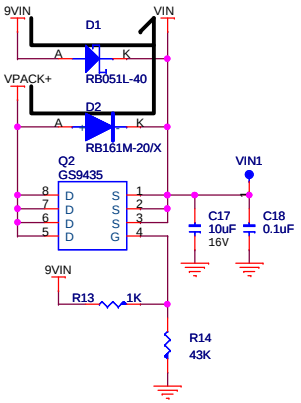

Battery charger 2-Cell

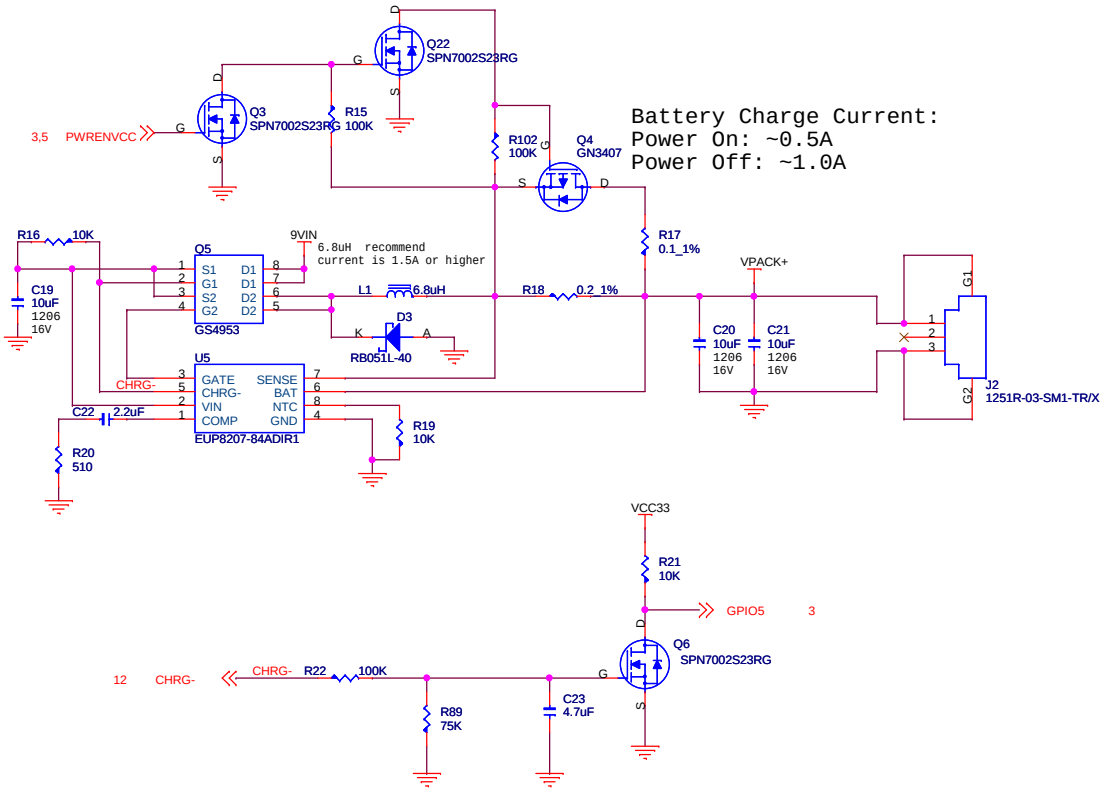

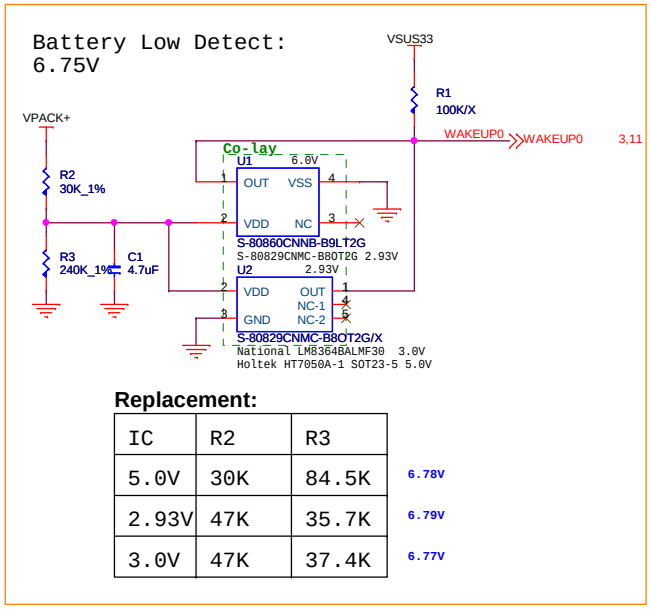

Replacement:

IC	R2	R3	
5.0V	30K	84.5K	6.78V
2.93V	47K	35.7K	6.79V
3.0V	47K	37.4K	6.77V

WonderMedia Technologies, Inc.

Title	DC-IN and Battery	
Size: Custom	Document Number: WMS8125B	Rev: 1.0
Date: Wednesday, December 15, 2010	Sheet 4 of 14	

Voltage Regulators

VIN->5VSUS, 2A

Replacement:

U6	R26	R29	R27	C37	L2	D4	
RT8272GSP	43K	10K	41K	2.2nF	6.8uH	Yes	3A
LP6482-ASOF	43K	10K	2.2K	3.3nF	10uH	NA	2A
EUP3476ADIR1	Same with EUP3472ADIR1						3A

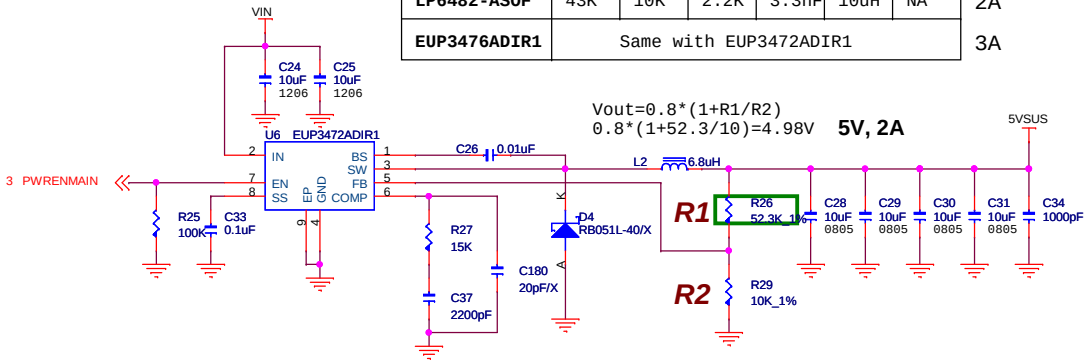

VIN->VCCBAT 3.3V 10uA

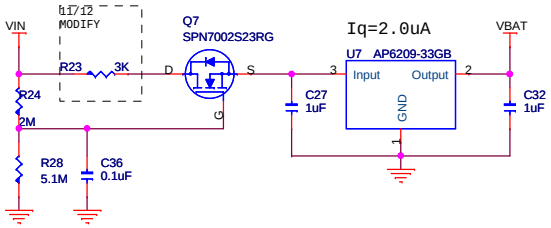

5VSUS->3.3V 800mA

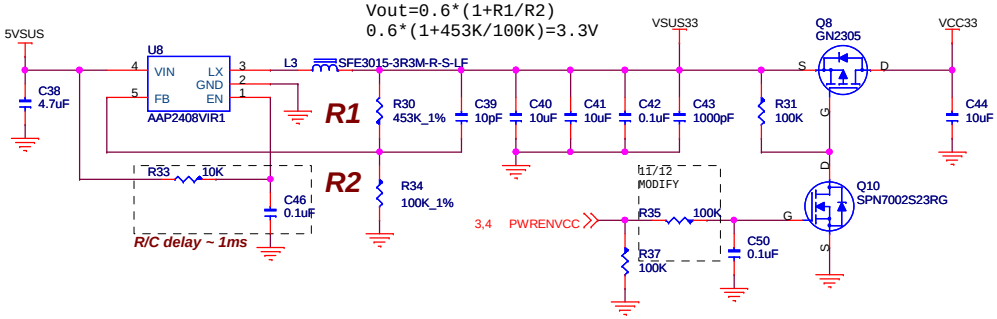

5VSUS->5V, 1A

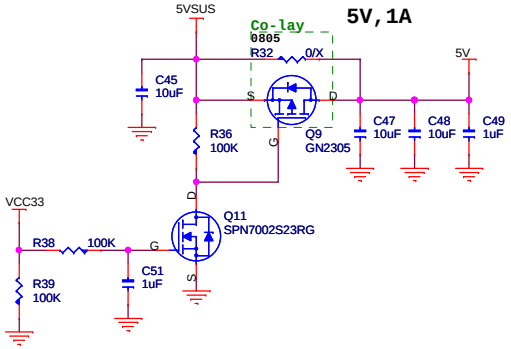

WonderMedia Technologies, Inc.		
Title: Voltage Regulators		
Size: Custom	Document Number: WMS8125B	Rev: 1.0
Date: Wednesday, December 15, 2010	Sheet 5 of 14	

MicroSD Socket

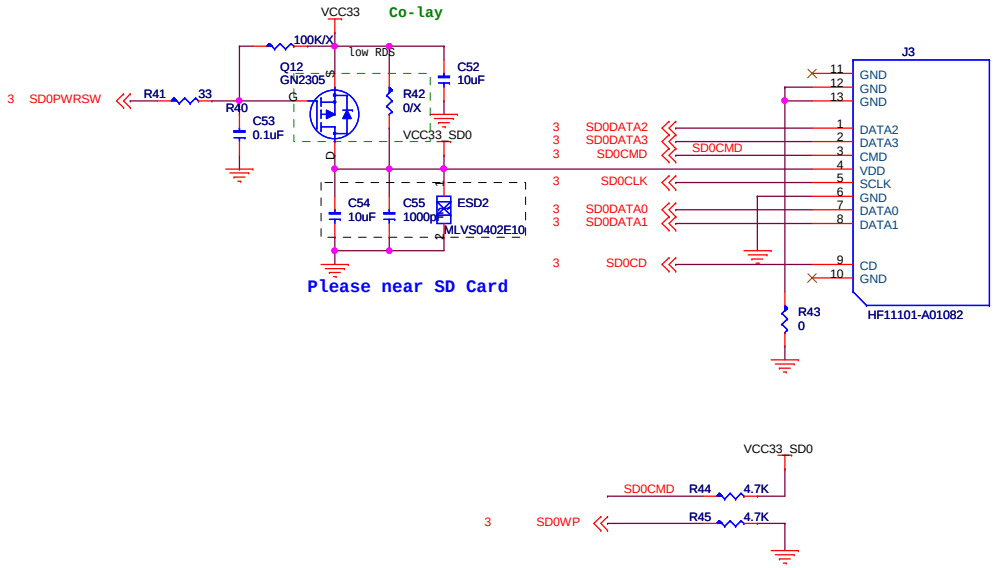

WonderMedia Technologies, Inc.		
Title: MicroSD Card		
Size: Custom	Document Number: WMS8125B	Rev: 1.0
Date: Tuesday, December 14, 2010	Sheet 6 of 14	

30pin CONN

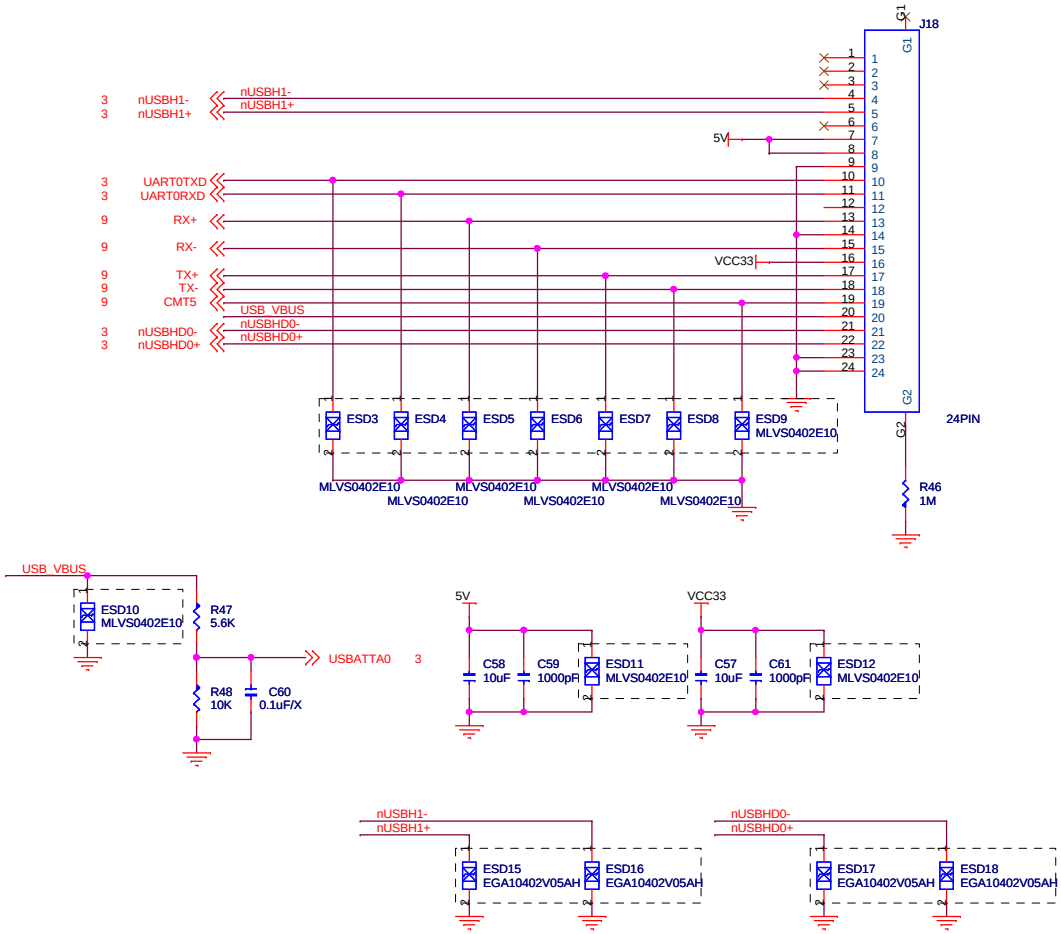

Notice: All ESD components place near 24pin connector.

WonderMedia Technologies, Inc.

Title	30pin CONN	
Size: Custom	Document Number: WMS8125B	Rev: 1.0
Date: Tuesday, December 14, 2010	Sheet 7 of 14	

USB WiFi/CCIR Camera

USB WiFi

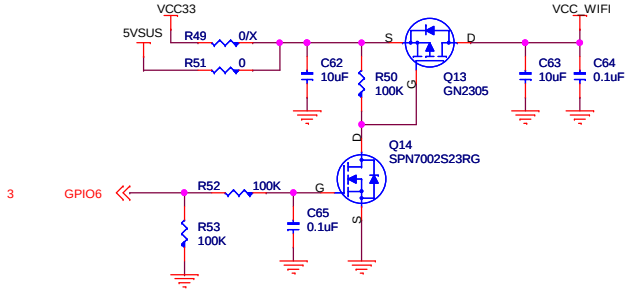

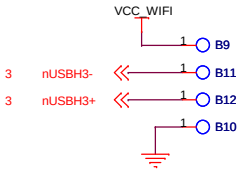

USB CAMERA

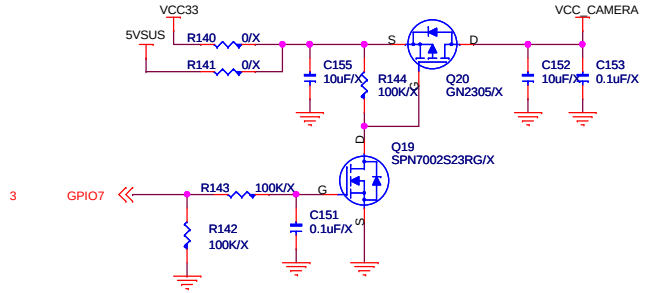

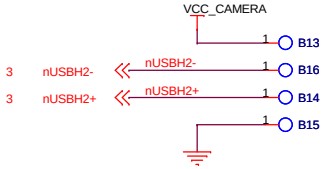

H.264 USB camera for skype

DEFAULT IS CCIR656 Camera

CCIR656 Camera

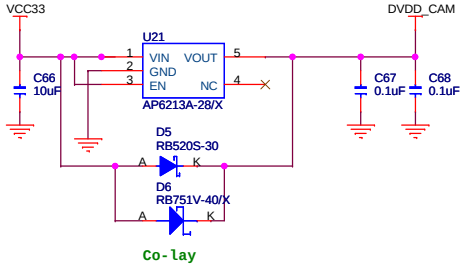

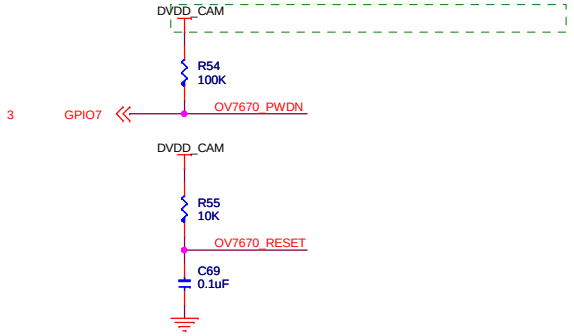

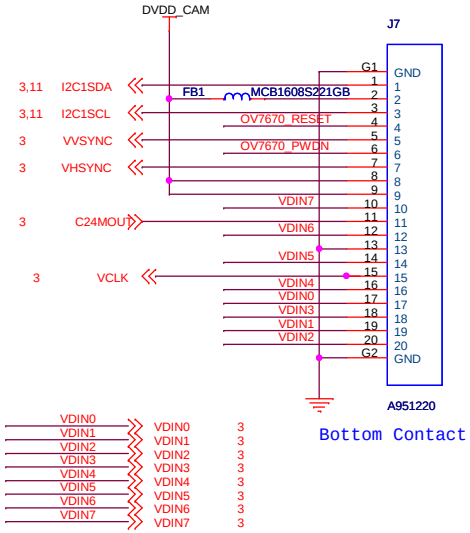

WonderMedia Technologies, Inc.		
Title: USB WiFi/CCIR Camera		
Size: Custom	Document Number: WMS8125B	Rev: 1.0
Date: Wednesday, December 15, 2010	Sheet 8 of 14	

Ethernet PHY

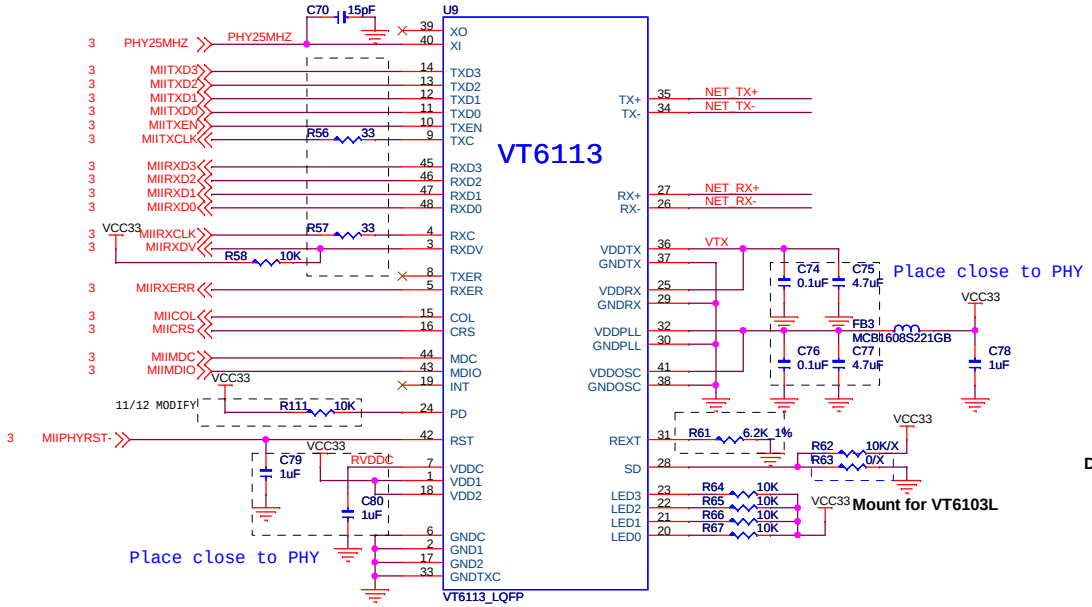

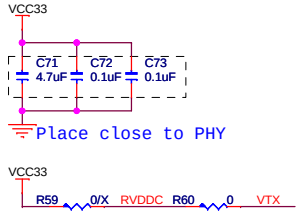

Default	R61	R59	R63	R62	R72
VT6113	6.2K	Remove	Remove	Remove	Mount
VT6103X	6.49K	Mount	Remove	Mount	Mount
VT6103L	6.49K	Mount	Mount	Remove	Remove

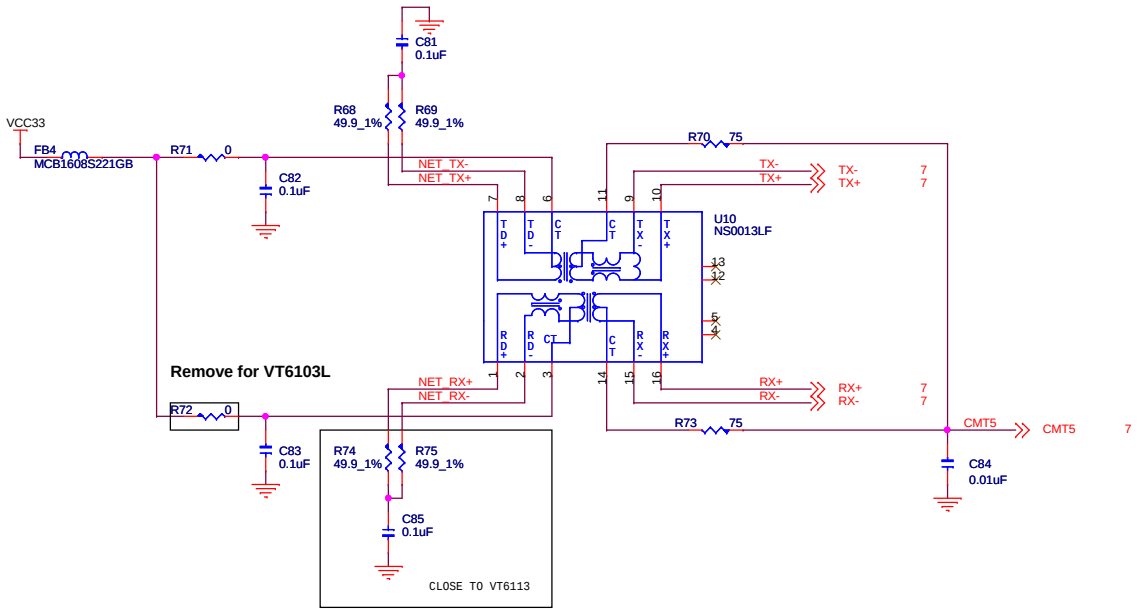

WonderMedia Technologies, Inc.	
Title	Ethernet PHY
Size: Custom	Document Number: WMS8125B
Rev: 1.0	
Date: Tuesday, December 14, 2010	Sheet 9 of 14

LCD Panel

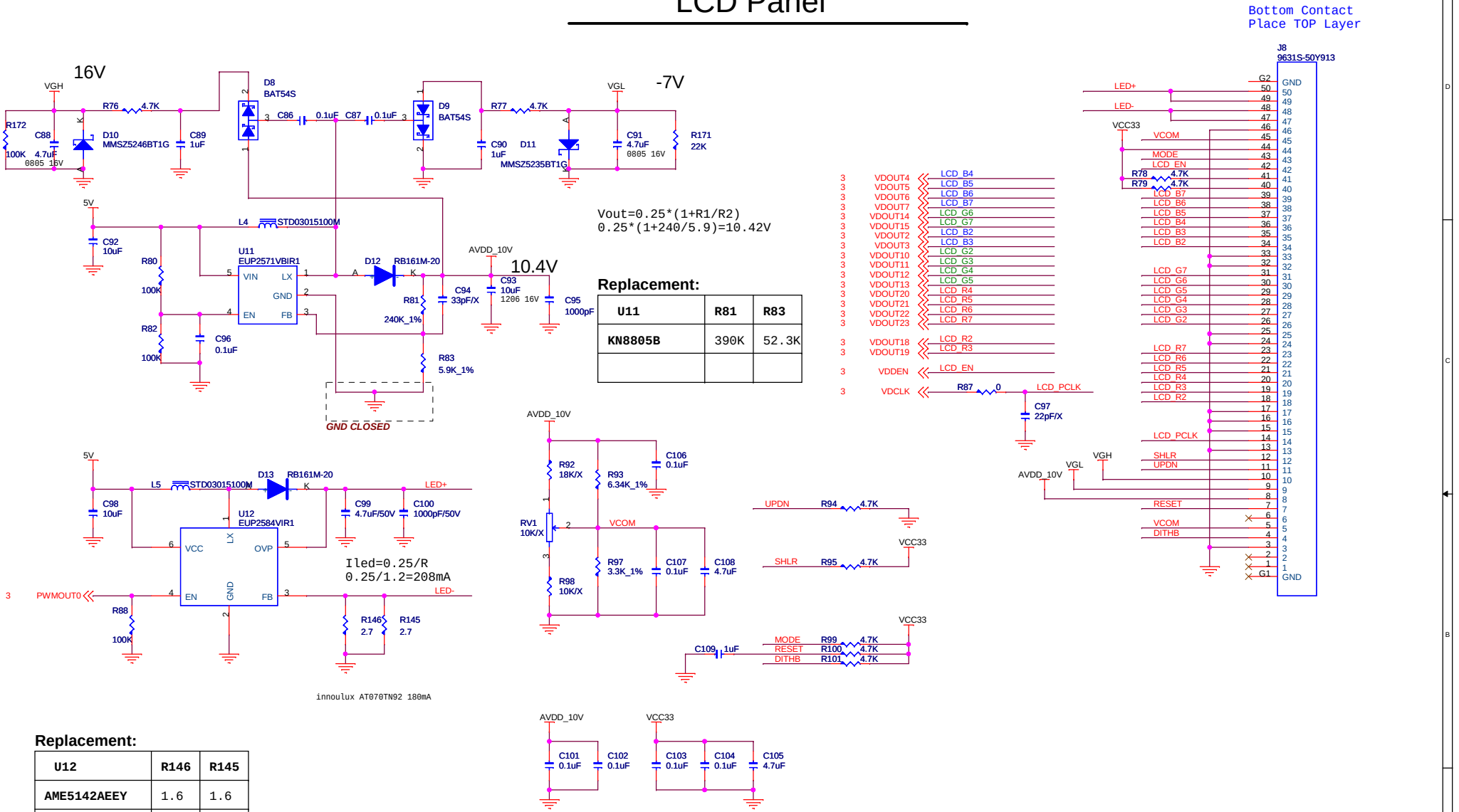

Replacement:

U11	R81	R83
KN8805B	390K	52.3K

Replacement:

U12	R146	R145
AME5142AEEY	1.6	1.6
RT9293B-20GJ6		

Company	WonderMedia Technologies, Inc.
Title	LCD Panel
Size	Custom
Document Number	WMS8125B
Rev	1.0
Date	Wednesday, December 15, 2010
Sheet	10 of 14

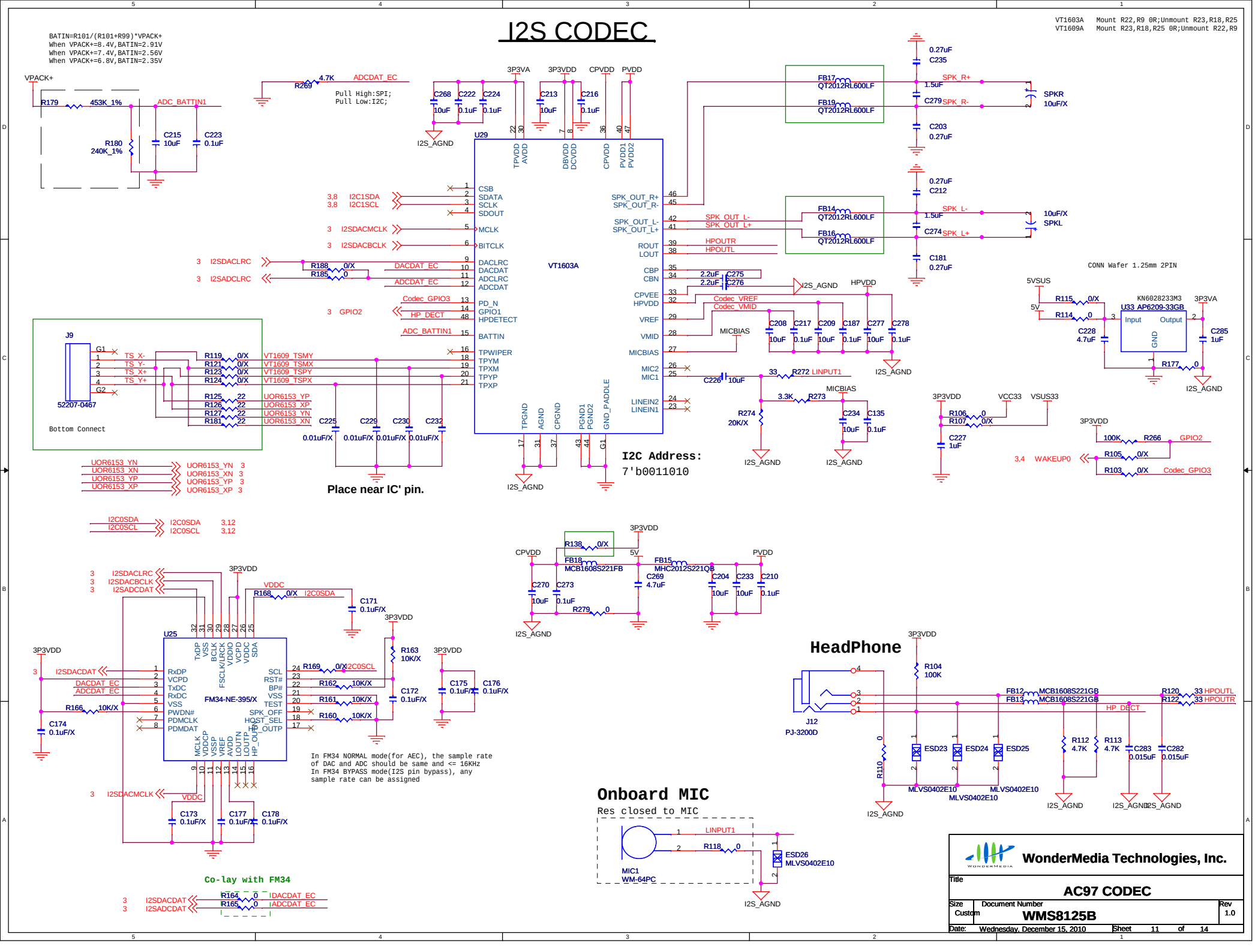
I2S CODEC
VT1603A Mount R22,R9 0R;Unmount R23,R18,R25
VT1609A Mount R23,R18,R25 0R;Unmount R22,R9
BATIN=R101/(R101+R99)*VPACK+
When VPACK+=8.4V,BATIN=2.91V
When VPACK+=7.4V,BATIN=2.56V
When VPACK+=6.8V,BATIN=2.35V
Pull High:SPI;
Pull Low:I2C;
U29
VT1603A
I2C Address:
7'b0011010
Place near IC' pin.
Bottom Connect
J9
52207-0467
CONN Wafer 1.25mm 2PIN
KN6028233M3
U33 AP6209-33GB
U25
FM34-NE-395/X
In FM34 NORMAL mode(for AEC), the sample rate
of DAC and ADC should be same and <= 16KHz
In FM34 BYPASS mode(I2S pin bypass), any
sample rate can be assigned
Co-lay with FM34
HeadPhone
J12
PJ-3200D
Onboard MIC
Res closed to MIC
MIC1
WM-64PC
WonderMedia Technologies, Inc.
Title
AC97 CODEC
Size
Custom
Document Number
WMS8125B
Rev
1.0
Date: Wednesday, December 15, 2010
Sheet 11 of 14

G-Sensor & Shake

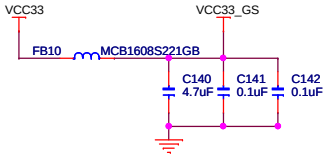

G-Sensor

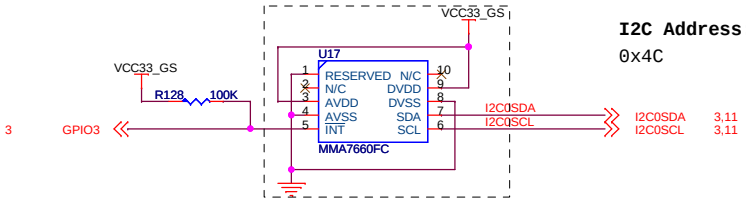

I2C Address:
0x4C

摆放时务必注意G-Sensodr在背对屏幕那面，第一PIN朝屏幕左上角

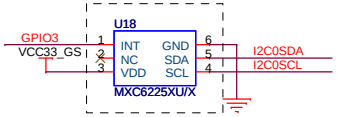

I2C Address:
2Ah

摆放时务必注意G-Sensodr在背对屏幕那面，第一PIN朝屏幕左上角

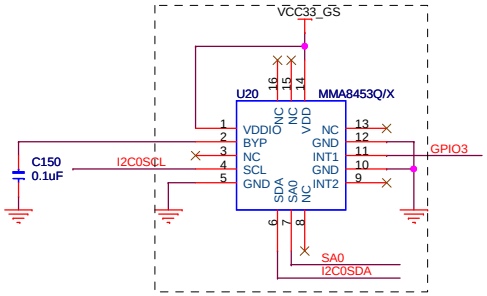

I2C Address:

SA0 = 0	SA0 = 1
0x1C	0x1D
default	

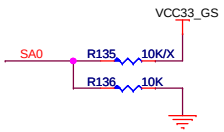

摆放时务必注意G-Sensodr在背对屏幕那面，第一PIN朝屏幕左上角

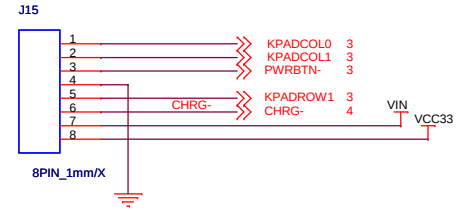

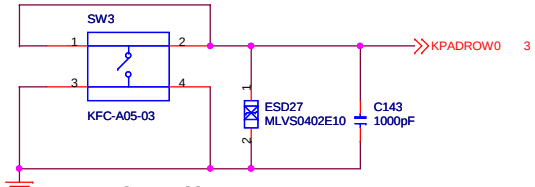

BACK KEY

Shake motor

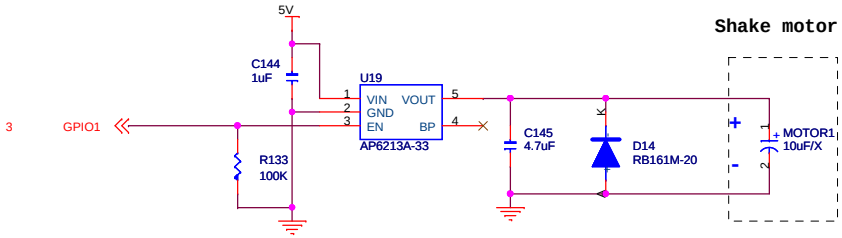

WonderMedia Technologies, Inc.			
Title: G-Sensor & shake			
Size: Custom	Document Number: WMS8125B		Rev: 1.0
Date: Tuesday, December 14, 2010	Sheet 12 of 14		

Keypad board

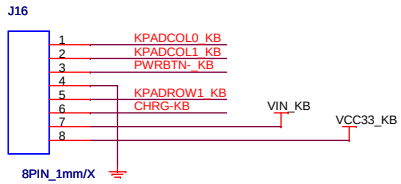

Power Button

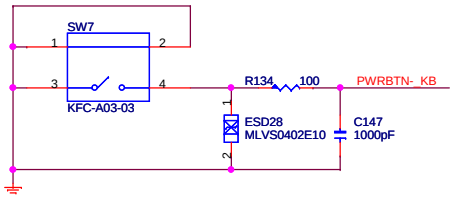

MENU

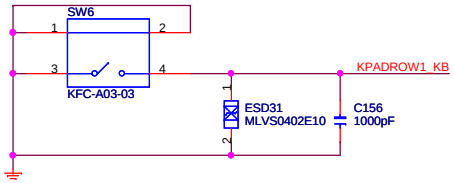

Volume +

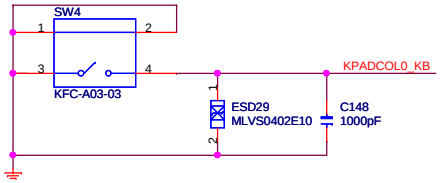

Volume -

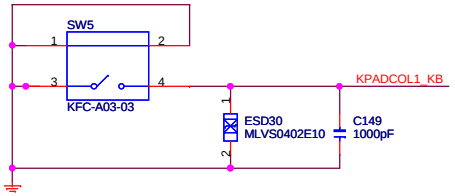

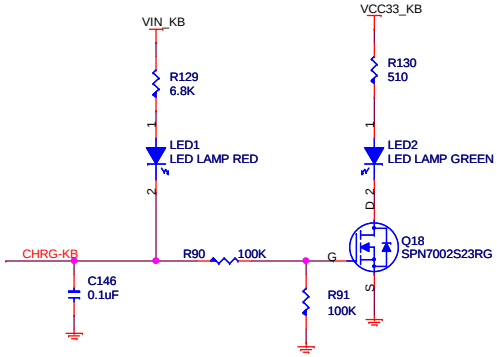

WonderMedia Technologies, Inc.

Title	Keypad Board	
Size: Custom	Document Number: WMS8125B	Rev: 1.0
Date: Wednesday, December 15, 2010	Sheet 13 of 14	

Version History

Version	PAGE	Modify Content	Responsibility	Date
WMS8125A		Initial released.	Xindi Chen	2010/9/21
WMS8125A1	3 3 3 4 5 5 9 11	1: U24 DUAL POINT TOUCH IC change to UOR6153(U22); 2: CS7146 PIN 13 REF VOLTAGE CHANGE TO 3.3V, 3: ADD RSMRST RESET SWITCH : SW1 4: ADD Q23, ISOLATE 9VIN and wakup1, reduce the leakage current 5: R23 change to 1.5k, CORRECT VBAT value 6: R35 change to 75k, CORRECT PWRENMAIN SIGNAL QUALITY 7: ADD R111,PULL UP VT6113 PD PIN , 8: CHANGE MUTE CIRCUIT,	Xindi Chen	2010/11/12
WMS8125A2	3 3	1: ADD C158 IN UARTORXD , FOR COUPLED ISSUE 2: R8 100K CHANGE TO OHM ,CS7146 INT(GPIO2) Change to GPIO0	Xindi Chen	
WMS8125A3	3 4 3 5 3 3 4 3 8	1: ADD R109 100K FOR RSMRST- BOOT STATUS 2: NC R1 100K,internal pull high 3:R96 100K CHANGE TO 10K 4:R35 75K CHANGE TO 100K 5:NC C6 C7 C8 C12 6:NC Light sensor U23,R139 7:NC R1 100K 8:NC USB CAMERA circuit NC C155 C152 C153 C151 R143 R144 Q19 ,Q20	Xindi Chen	2010/12/10
WMS8125B	3 11	1: DEL 7146 AND LIGHT SENSOR CIRCUIT 1: CHANGE WM8900 TO VT1603A		

Power Sequence:

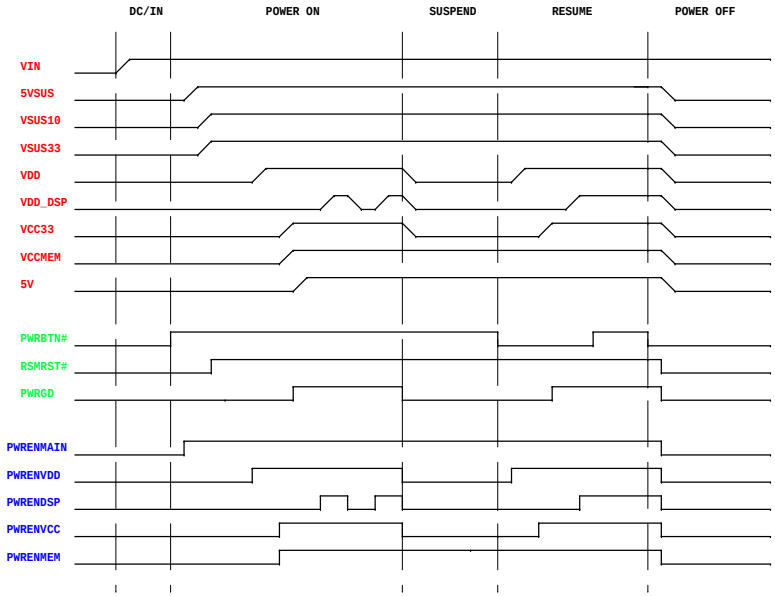

WonderMedia Technologies, Inc.			
Title: Version History			
Size: Custom	Document Number: WMS8125B		Rev: 1.0
Date: Tuesday, December 14, 2010	Sheet 14 of 14		

WM8650 Core Board

WMS8121B

Power Tree:

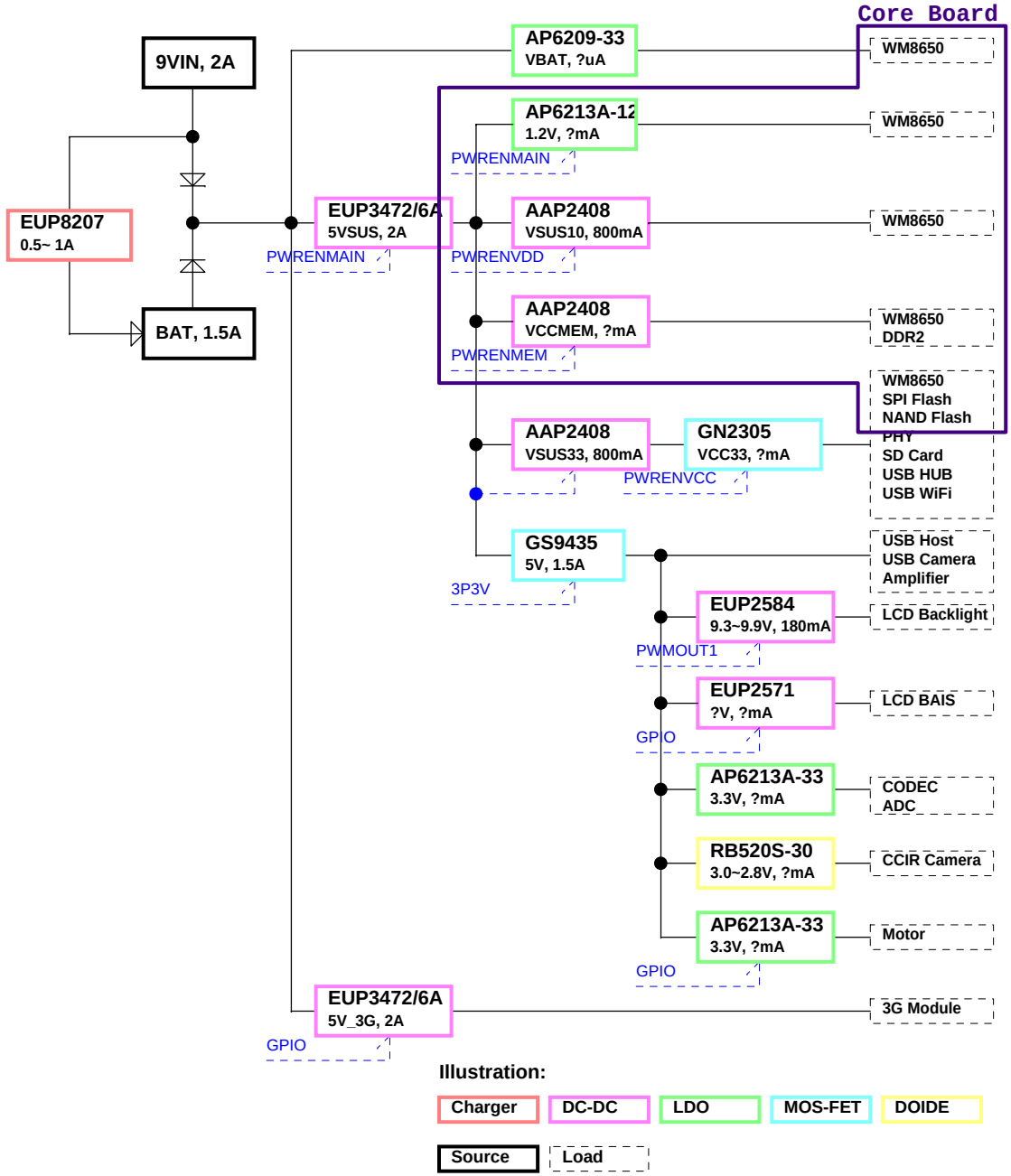

TITLE	PAGE
Cover Page	01
Block Diagram	02
WM8650 Power/Ground	03
WM8650 CLOCK/RESET	04
WM8650 DDR2/DRAM	05
WM8650 NAND/SF/SPI/PWM	06
WM8650 SD/SDIO	07
WM8650 I2S	08
WM8650 USB (H/D)	09
WM8650 LCD I/F	10
WM8650 UART/KEYPAD/JTAG	11
WM8650 MII	12
Strapping Option	13
Core Board Package	14
Revision History	15

WonderMedia Technologies, Inc.

Title: Cover Page

Size: Custom | Document Number: WMS8121B | Rev: 1.0

Date: Tuesday, January 04, 2011 | Sheet 1 of 15

Block Diagram

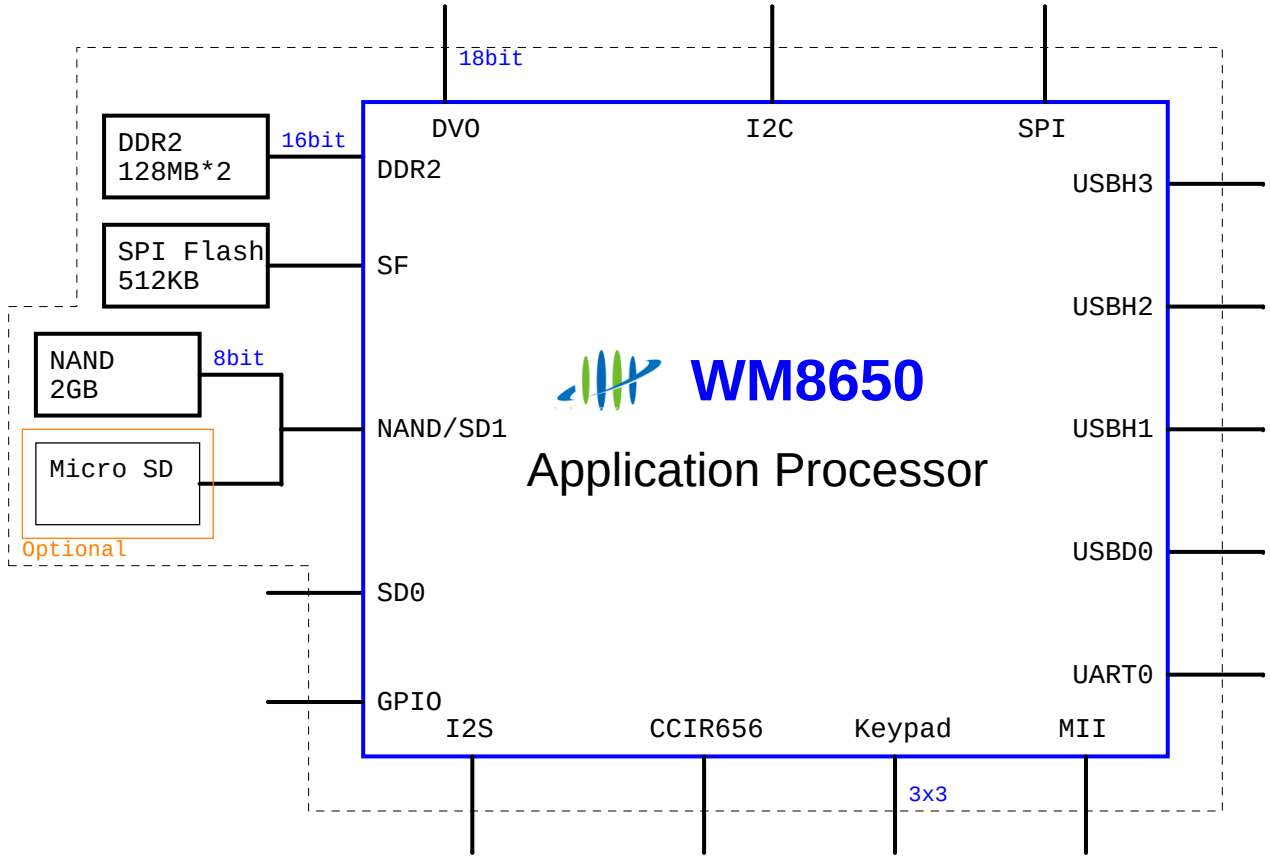

WonderMedia Technologies, Inc.

Title: Block Diagram		
Size: Custom	Document Number: WMS8121B	Rev: 1.0
Date: Tuesday, January 04, 2011	Sheet 2 of 15	

WM8650: Power / Ground

PART: E+F

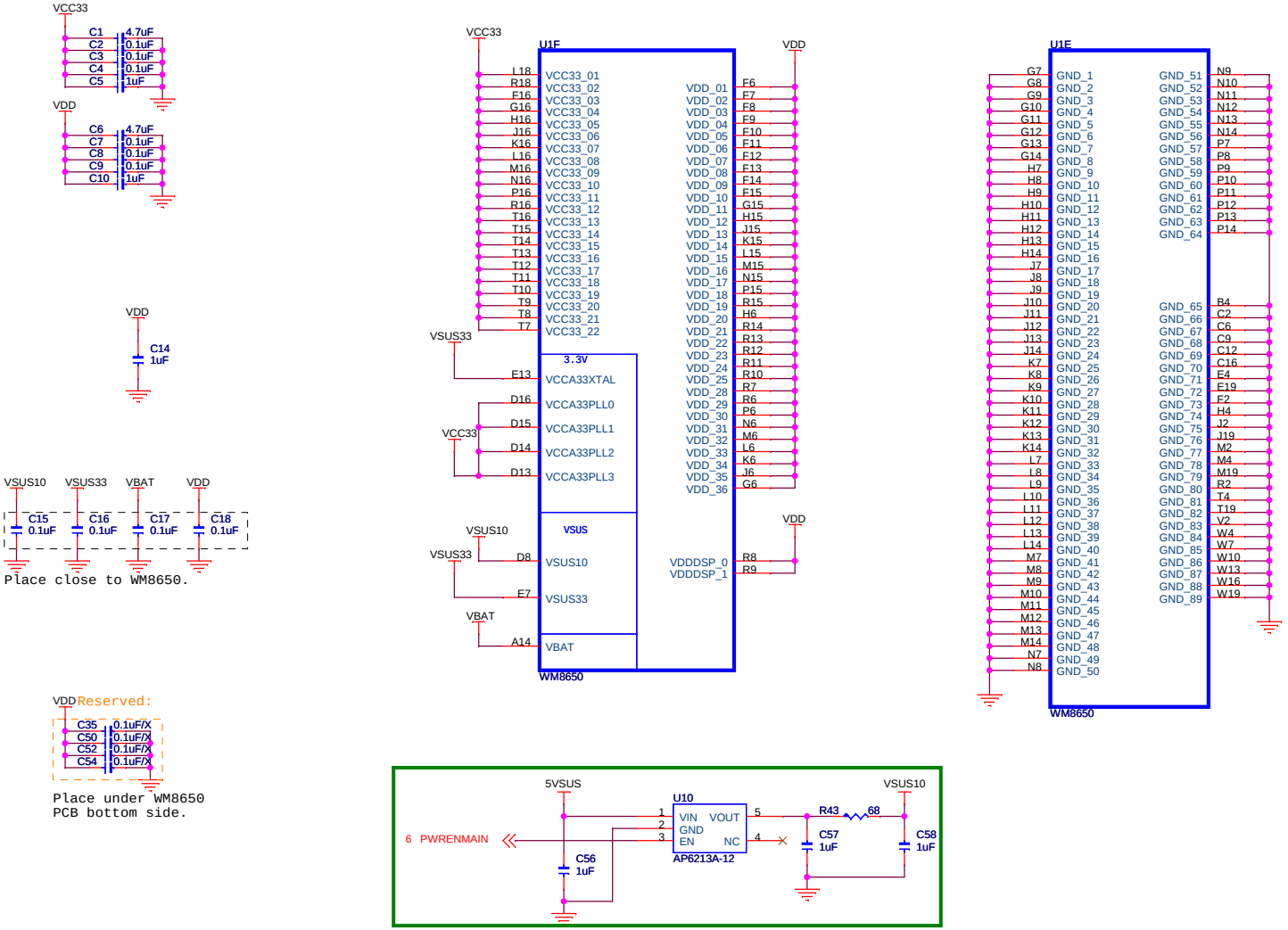

WonderMedia Technologies, Inc.		
Title: WM8650: Power/Ground		
Size: Custom	Document Number: WMS8121B	Rev: 1.0
Date: Tuesday, January 04, 2011	Sheet 3 of 15	

WM8650: CLOCK/RESET/PMC/GPIO

PART:A

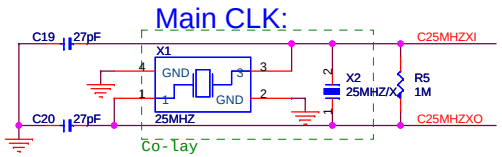

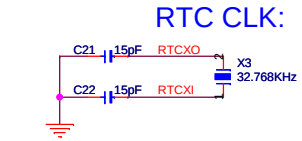

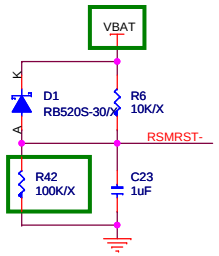

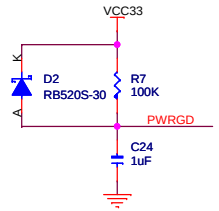

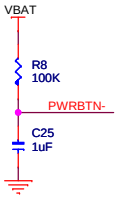

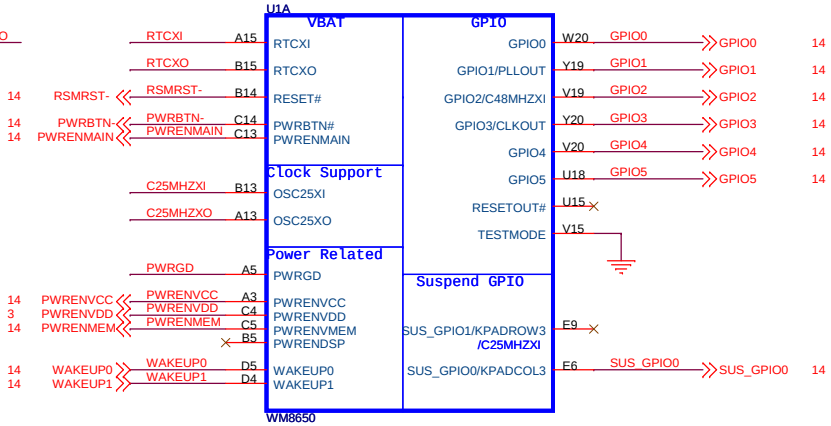

Company	WonderMedia Technologies, Inc.		
Title	WM8650: CLOCK/RESET/PMC/GPIO		
Size: Custom	Document Number: WMS8121B		Rev: 1.0
Date: Tuesday, January 04, 2011	Sheet 4 of 15		

WM8650: DDR2 SDRAM

PART: B

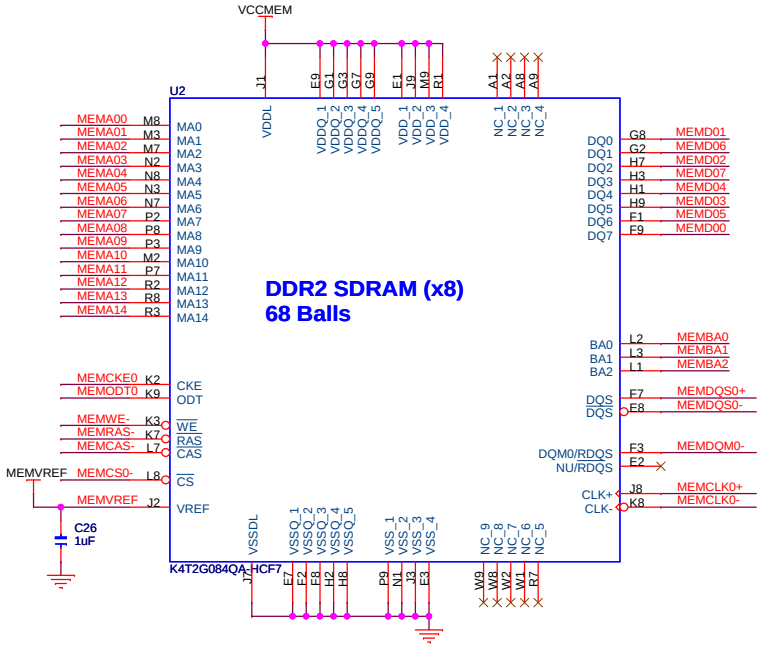

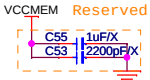

Place under WM8650
PCB bottom side.

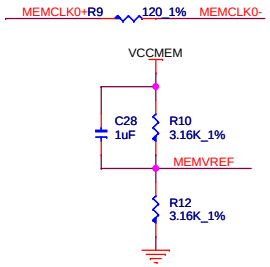

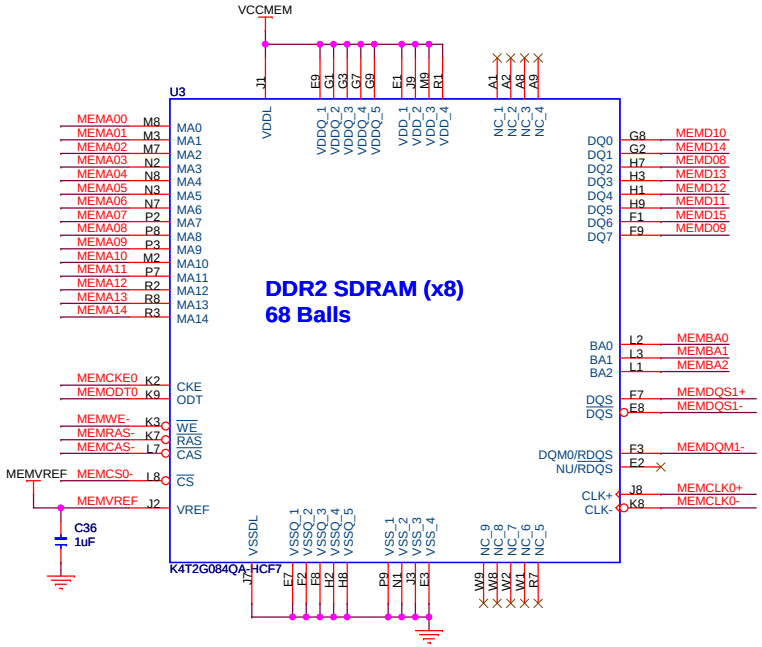

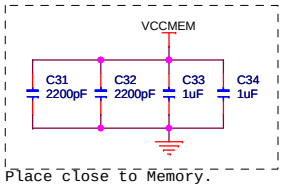

Place close to Memory.

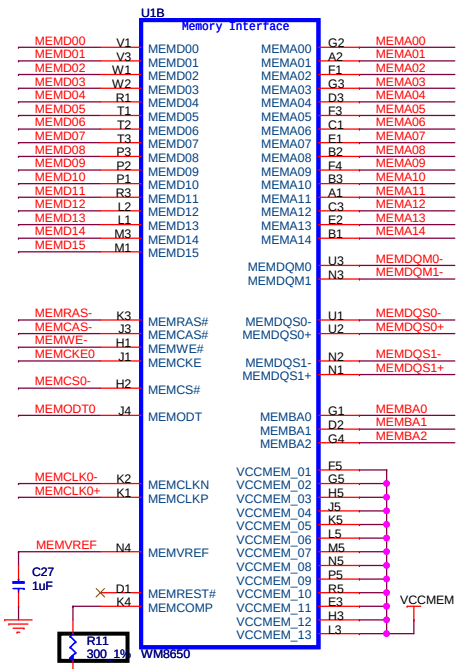

Place close to WM8650.

DDR2	300 ohm

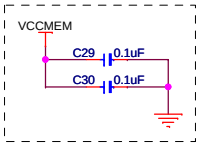

Place close to WM8650.

WonderMedia Technologies, Inc.

Title	WM8650: DDR2	
Size: Custom	Document Number: WMS8121B	Rev: 1.0
Date: Tuesday, January 04, 2011	Sheet 5 of 15	

WM8650: NAND FLASH
PART: J

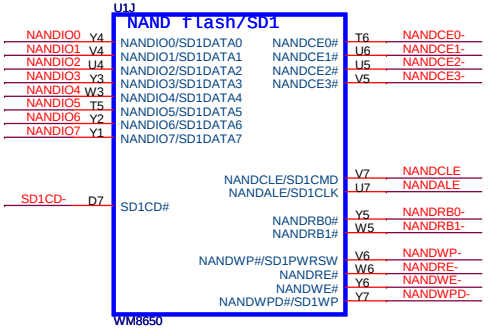

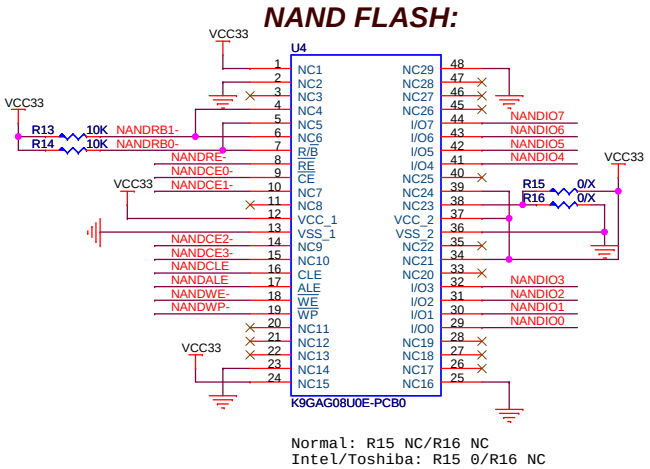

Normal: R15 NC/R16 NC
Intel/Toshiba: R15 0/R16 NC

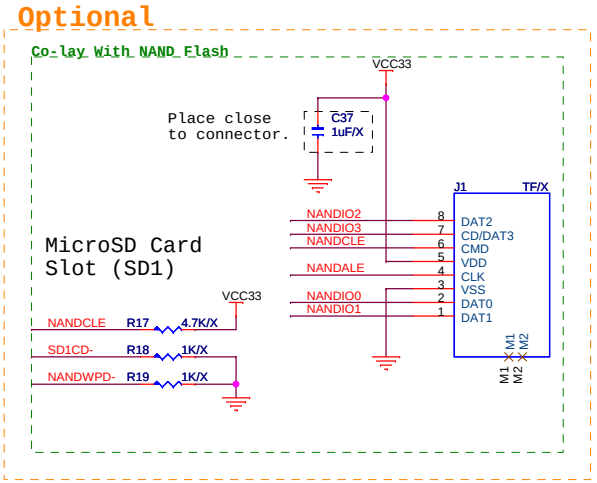

WM8650: SPI FLASH
PART: I

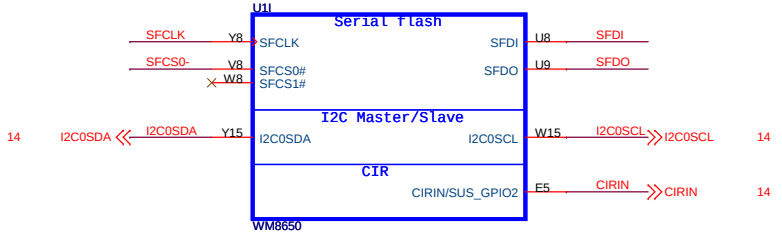

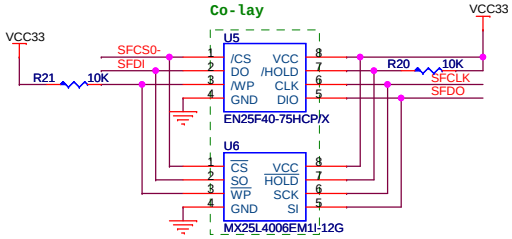

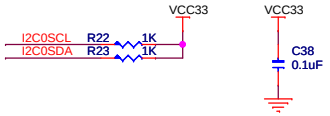

WM8650: SPI + PWM
PART: L

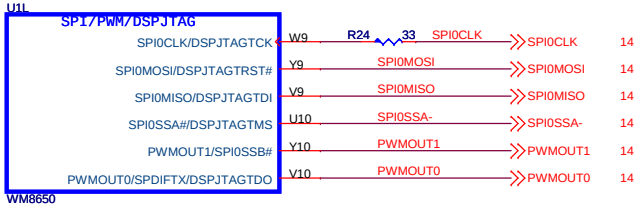

WonderMedia Technologies, Inc.

Title	WM8650: NAND FLASH	
Size: Custom	Document Number: WMS8121B	Rev: 1.0
Date: Tuesday, January 04, 2011	Sheet 6 of 15	

WM8650: SD/SDIO

PART: C

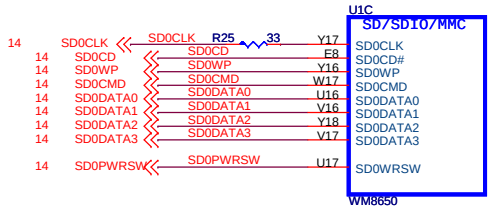

WonderMedia Technologies, Inc.

Title	WM8650: SD/SDIO	
Size: Custom	Document Number: WMS8121B	Rev: 1.0
Date: Tuesday, January 04, 2011	Sheet 7 of 15	

WM8650: I2S

PART: M

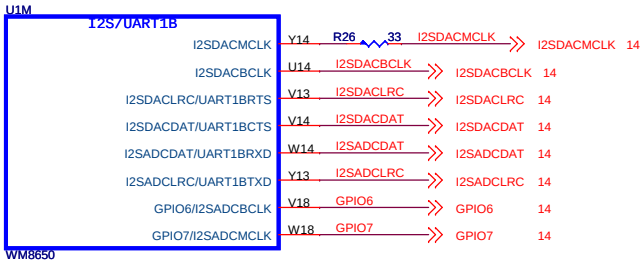

WonderMedia Technologies, Inc.

Title: WM8650: I2S		
Size: Custom	Document Number: WMS8121B	Rev: 1.0
Date: Tuesday, January 04, 2011	Sheet 8 of 15	

WM8505: USB (HOST+DEVICE)

PART: D

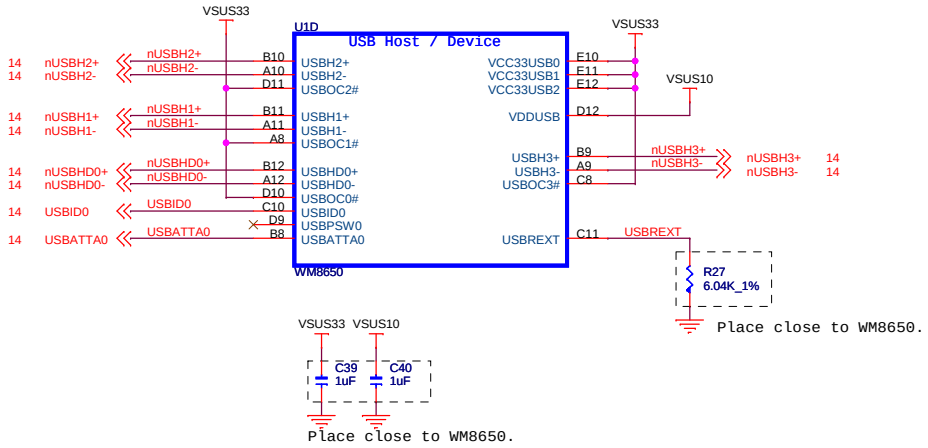

(USBH3) to
(USBH2) to
(USBH1) to
(USBHD0) to USB mini-AB connector.

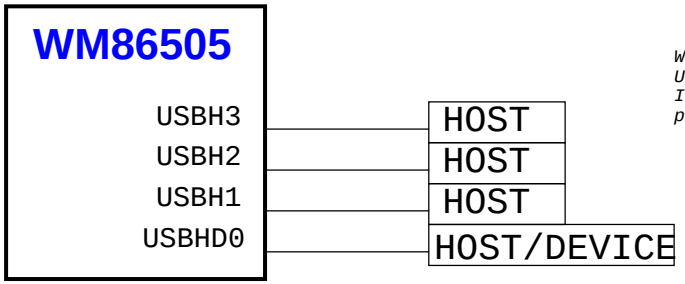

Wakeup signal (USBATTA) is asserted from external USB-Host only.
If WM8650 at USB-Host mode, should ignore USBATTA pin

WonderMedia Technologies, Inc.

Title	WM8650: USB (H/D)	
Size: Custom	Document Number: WMS8121B	Rev: 1.0
Date: Tuesday, January 04, 2011	Sheet 9 of 15	

WM8650: DVO/VID

PART: K

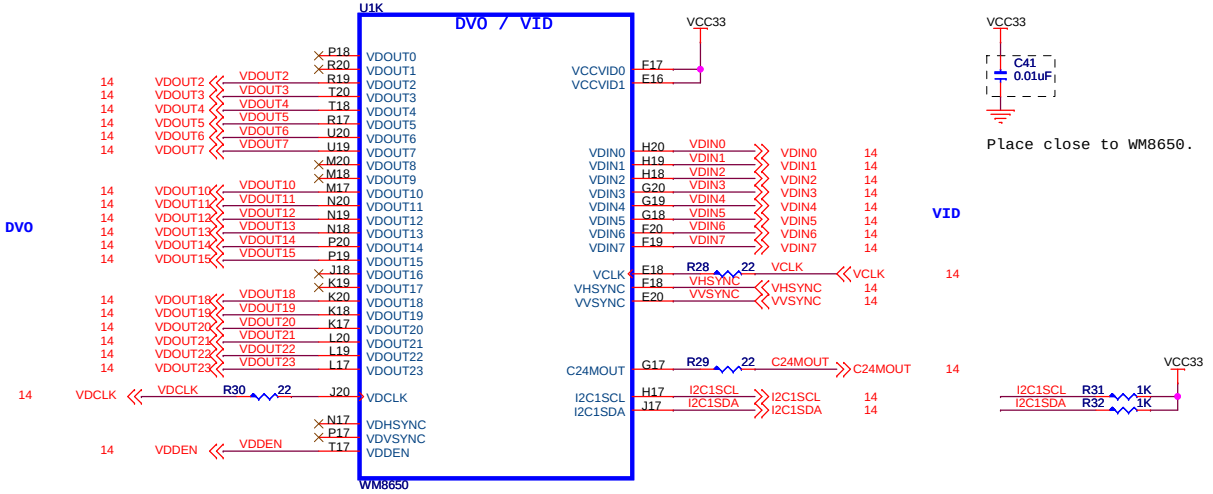

WonderMedia Technologies, Inc.		
Title: WM8650: DVO/VID		
Size: Custom	Document Number: WMS8121B	Rev: 1.0
Date: Tuesday, January 04, 2011	Sheet 10 of 15	

WM8650: UART/KEYPAD/JTAG

PART: H

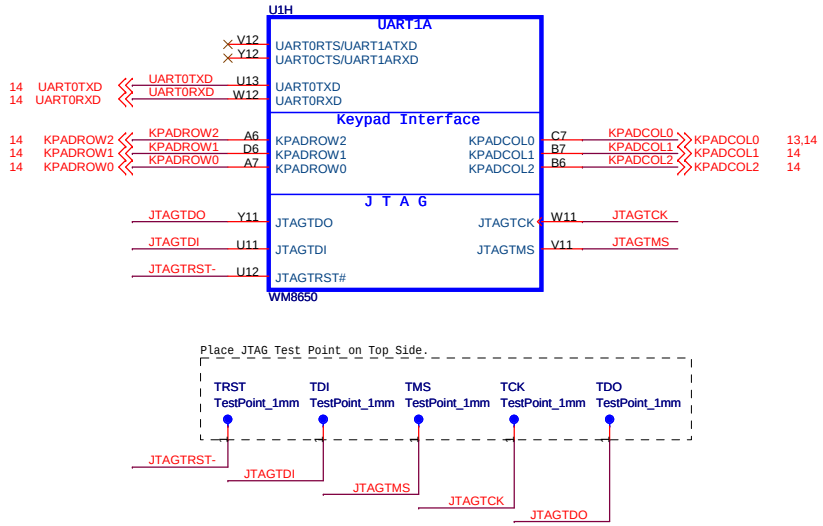

WonderMedia Technologies, Inc.

Title	WM8650: UART/KEYPAD/JTAG	
Size: Custom	Document Number: WMS8121B	Rev: 1.0
Date: Tuesday, January 04, 2011	Sheet 11 of 15	

WM8650: MII
PART: G

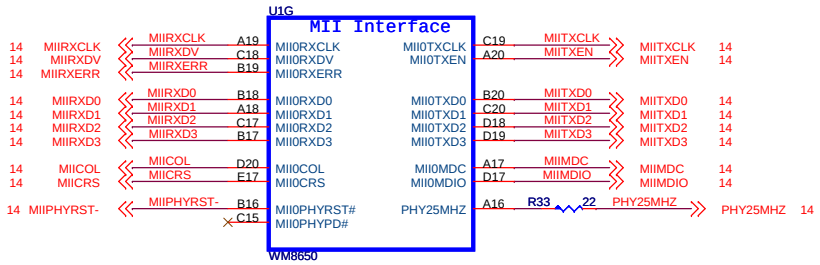

Title	WM8650: MII	
Size: Custom	Document Number: WMS8121B	Rev: 1.0
Date: Tuesday, January 04, 2011	Sheet 12 of 15	

WonderMedia Technologies, Inc.

Strapping Option

Pin	Internal Pull up/down	Default	Description
KPADCOL0	pull down	0	Inert PWRBTN# 0:debounced for a few cycles 1:kept 2s to trigger

WARMING:

ALL others strappings not listed above recommend to use internal settings as default. Otherwise un-expected results may encounter.

WonderMedia Technologies, Inc.

Title: Strapping Option

Size: Custom | Document Number: WMS8121B | Rev: 1.0

Date: Tuesday, January 04, 2011 | Sheet 13 of 15

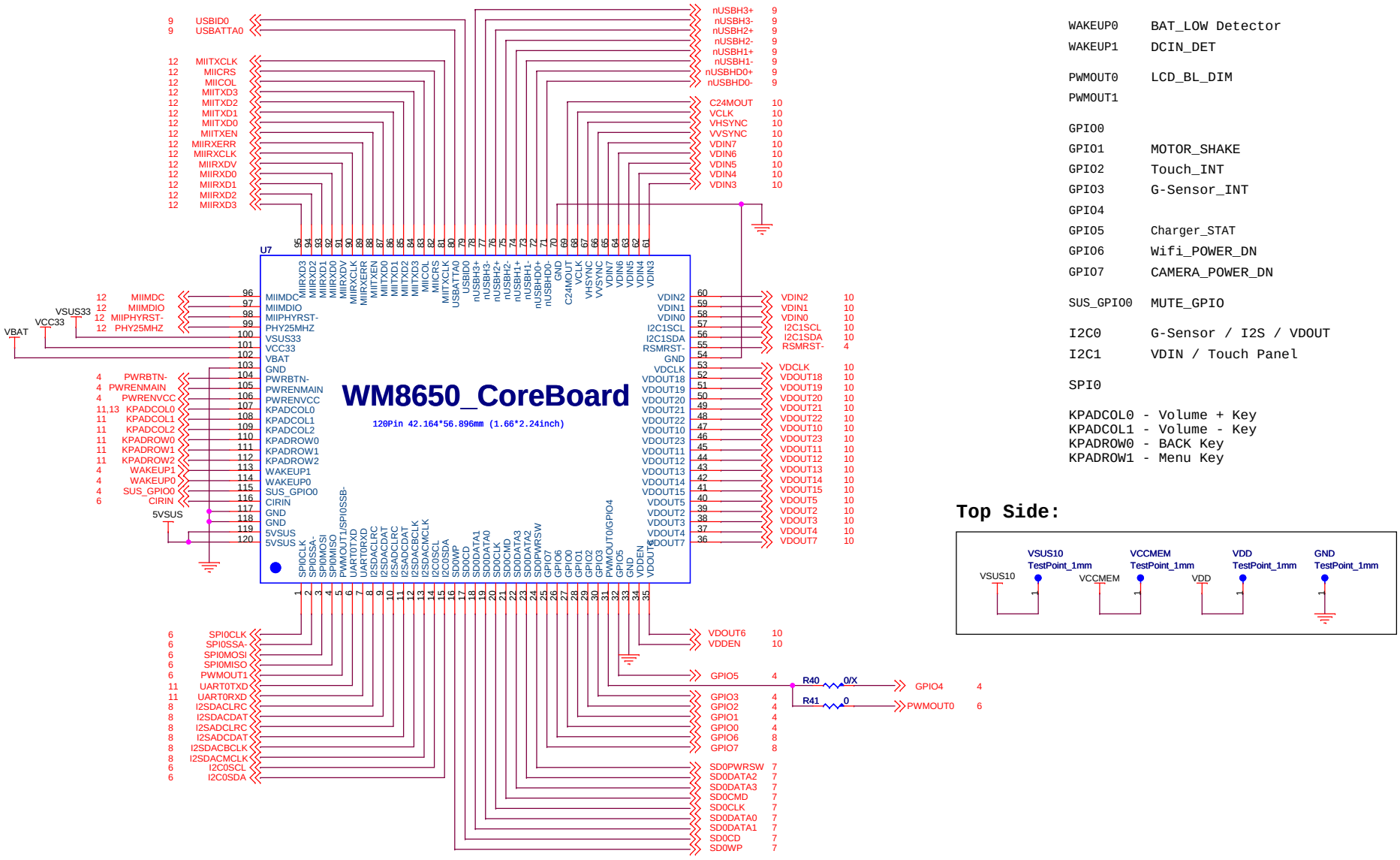

WAKEUP0 BAT_LOW Detector
WAKEUP1 DCIN_DET

PWMOUT0 LCD_BL_DIM
PWMOUT1

GPIO0
GPIO1 MOTOR_SHAKE
GPIO2 Touch_INT
GPIO3 G-Sensor_INT
GPIO4
GPIO5 Charger_STAT
GPIO6 Wifi_POWER_DN
GPIO7 CAMERA_POWER_DN

SUS_GPIO0 MUTE_GPIO

I2C0 G-Sensor / I2S / VDOUT
I2C1 VDIN / Touch Panel

SPI0

KPADCOL0 - Volume + Key
KPADCOL1 - Volume - Key
KPADROW0 - BACK Key
KPADROW1 - Menu Key

Top Side:

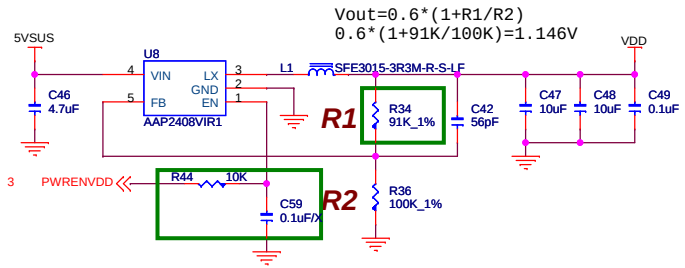

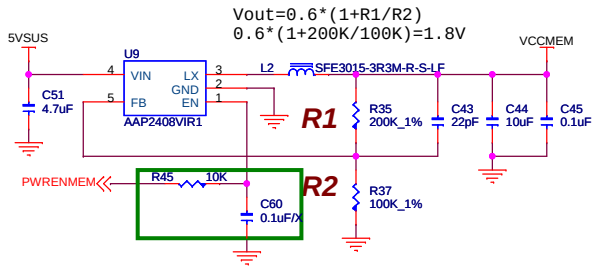

WonderMedia Technologies, Inc.

Title	Core Board Package	
Size: Custom	Document Number: WMS8121B	Rev: 1.0
Date: Tuesday, January 04, 2011	Sheet 14 of 15	

Version History

Version	Modify Content	Responsibility	Date
WMS8121A	Initial released.	Ben Huang	2010/12/12
WMS8121B	1.Delete Q1 GN2314/R1 200K/R2 100K/C12 10uF/C13 0.1uF; 2.Add U10 AP6213A-12/C56/C57/C58 1uF/R43 68; 3.Delete R38 100K, add R44/R45 10K and C59/C60 0.1uF for reserved; 4.R34 95.3K_1% change to 91K_1%; 5.Add R42 100K for Reseved; 6.D1/R6 connect to VBAT; 7.UART0RXD spacing 10mil; 8.Change D1/D2 packsge; 9.Optimize layout.	Ben Huang	2011/01/04

Power Sequence:

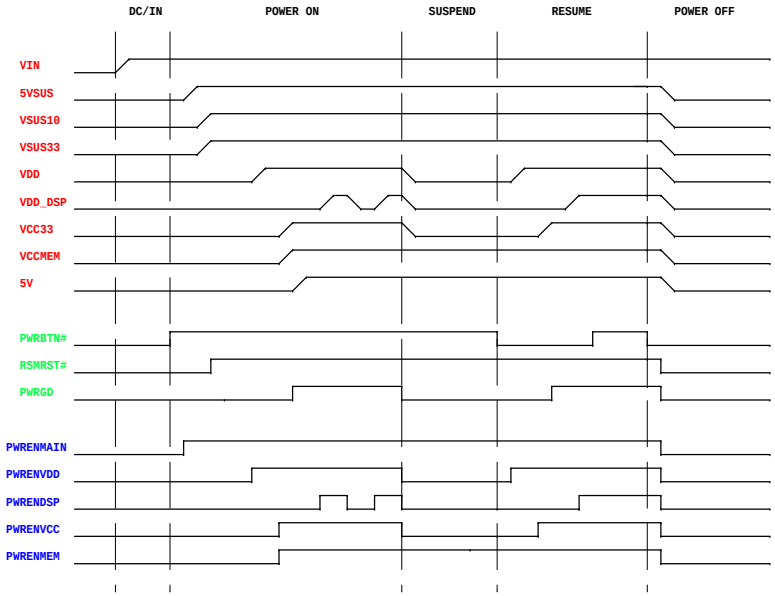

WonderMedia Technologies, Inc.

Title: Version History		
Size: Custom	Document Number: WMS8121B	Rev: 1.0
Date: Tuesday, January 04, 2011	Sheet 15 of 15	

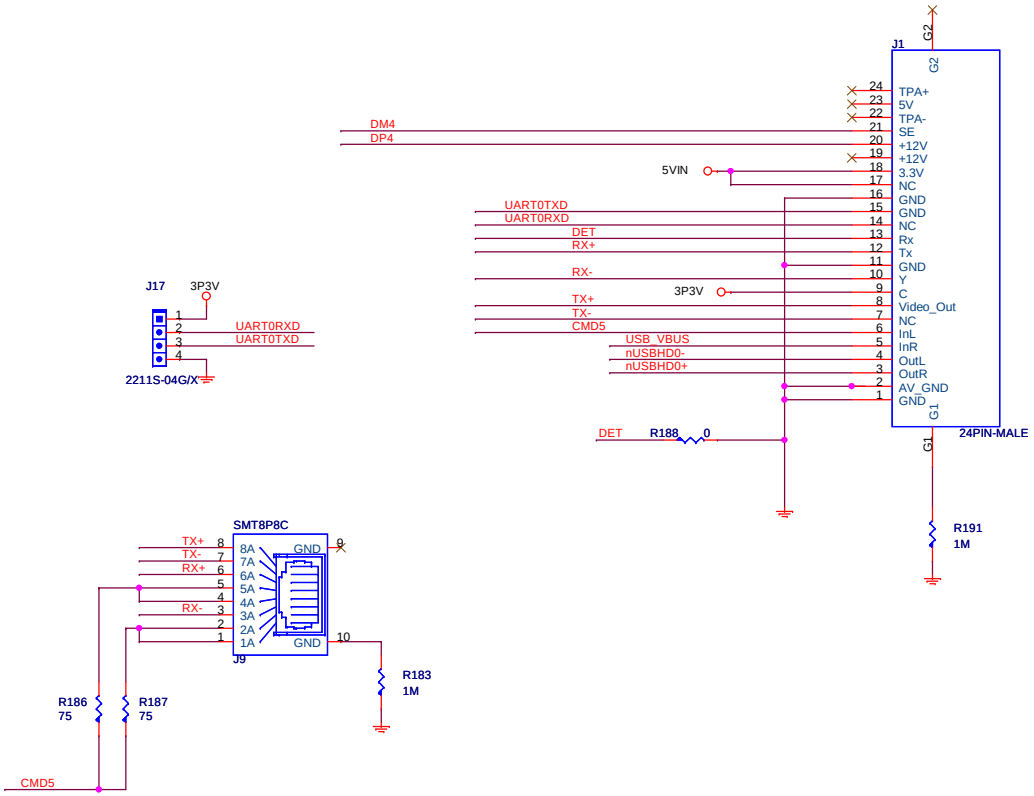

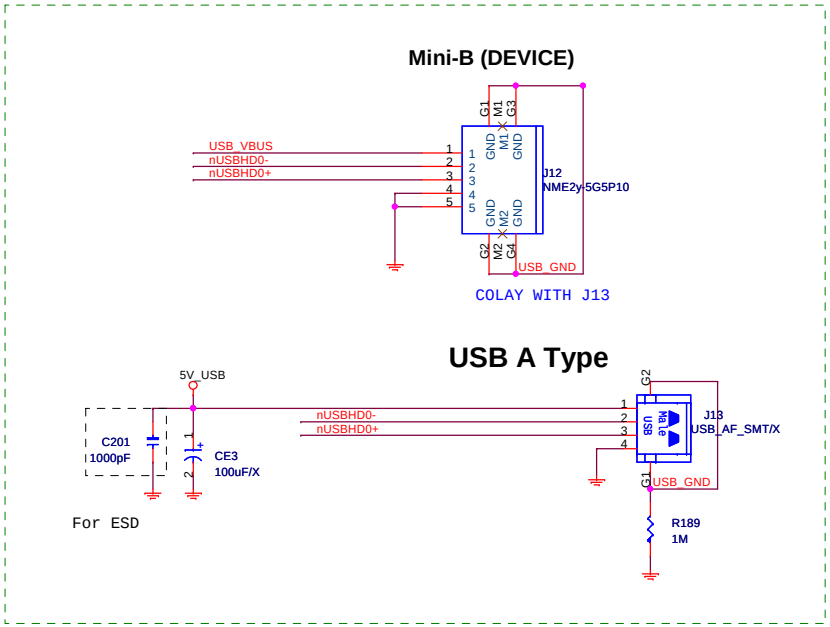

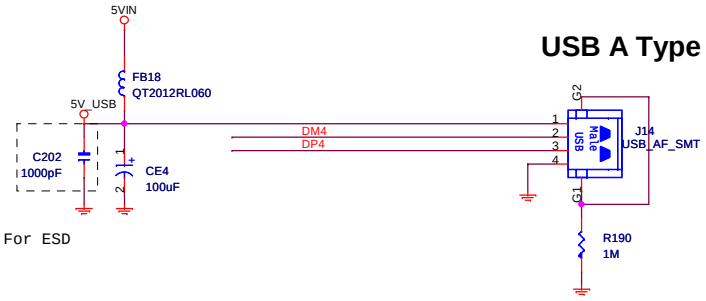

WonderMedia Technologies, Inc.

Title: Small Board		
Size: A3	Document Number: WMS8131A	Rev: 1.0
Date: Saturday, September 25, 2010	Sheet 16 of 16	