SAR Dipole

Performance Measurement Report

ISSUED BY
Shenzhen BALUN Technology Co., Ltd.

FOR

Validation Dipoles

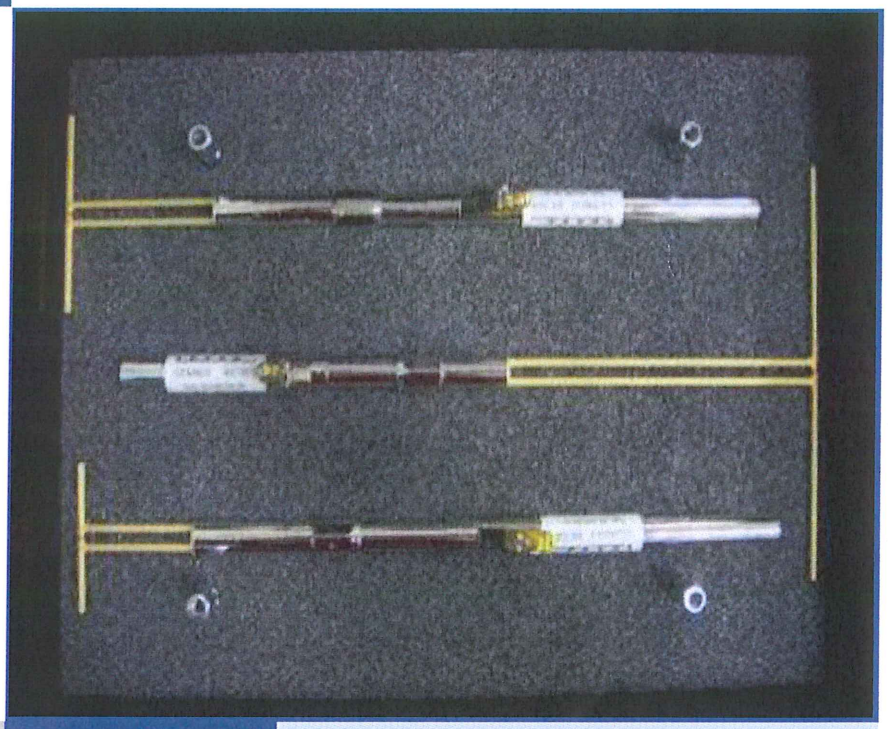

Tested by: Zong Liyao
(Engineer)

Approved by: Liao Jianming
(Technical Director)

Report No.:	LW-SZ1860070-701
EUT Type:	SAR Validation Dipole
Model Name:	D750V3, D835V2, D1750V2 D1900V2, D2450V2 D2600V2, D5GHzV2
Brand Name:	Speag
Test Conclusion:	Pass
Test Date:	Mar. 16, 2018 ~ Jul. 05, 2018
Date of Issue:	Jul. 08, 2018

NOTE: This test report can be duplicated completely for the legal use with the approval of the applicant; it shall not be reproduced except in full, without the written approval of Shenzhen BALUN Technology Co., Ltd. BALUN Laboratory. Any objections should be raised within thirty days from the date of issue. To validate the report, please contact us.

Block B, 1st FL,Baisha Science and Technology Park, Shahe Xi Road, Nanshan District, Shenzhen, Guangdong, P. R. China 518055
TEL: +86-755-66850100, FAX: +86-755-61824271
Email: info@baluntek.com
www.baluntek.com

1 GENERAL INFORMATION

1.1 Introduction

This document contains a summary of the requirements set forth by the IEEE 1528, FCC KDB 865664 D01 for reference dipoles used for SAR measurement system validations. Instead of the typical annual calibration recommended by measurement standards, the reference dipoles were demonstrated that the SAR target, impedance and return loss have remain stable, so the longer calibration interval is acceptable.

1.2 General Description for Equipment under Test (EUT)

EUT Type	DASY 5 Reference Dipoles
Manufacturer	Speag

Parameter	EUT 1	EUT 2	EUT 3	EUT 4	EUT 5	EUT 6	EUT 7
Model	D750V3	D835V2	D1750V2	D1900V2	D2450V2	D2600V2	D5GHzV2
Frequency	750 MHz	835 MHz	1750 MHz	1900 MHz	2450 MHz	2600 MHz	5GHz-6GHz
Serial Number	SN 1055	SN 4d187	SN 1130	SN 5d193	SN 952	SN 1095	SN 1200
Product Condition (New/ Used)	Used	Used	Used	Used	Used	Used	Used
Last Cal. Date	2017/6/26	2017/6/26	2017/7/1	2017/6/30	2017/3/21	2017/7/10	2017/6/29
Current meas. Date	2018/6/24	2018/6/24	2018/6/26	2018/6/26	2018/3/16	2018/7/5	2018/6/25

1.3 Test Equipment List

Description	Manufacturer	Model	Serial No.	Cal. Date	Cal. Due
PC	Dell	N/A	N/A	N/A	N/A
E-Field Probe	Speag	EX3DV4	SN: 7340	2018/01/11	2019/01/10
E-Field Probe	Speag	ES3DV3	SN: 3110	2017/08/02	2018/08/01
Data Acquisition Electronics	Speag	DAE4	SN: 685	2017/08/02	2018/08/01
Signal Generator	R&S	SMBV100A	260592	2018/06/15	2019/06/14
Power Meter	Agilent	E4419B	GB40201833	2017/11/02	2018/11/01
Power Sensor	Agilent	E9300A	MY41498012	2017/11/02	2018/11/01
Power Sensor	Agilent	E9300A	MY41499891	2017/11/02	2018/11/01
Network Analyzer	Agilent	5071C	MY46103472	2018/03/14	2019/03/13
Thermometer	Elitech	RC-4HC	N/A	2017/11/13	2018/11/12
Dielectric Probe Kit	SATIMO	SCLMP	SN 25/13 OCPG56	N/A	N/A
Phantom1	Speag	SAM	SN: 1859	N/A	N/A
Phantom2	Speag	SAM	SN: 1857	N/A	N/A
Power Amplifier	SATIMO	6552B	22374	N/A	N/A
Attenuator	COM-MW	ZA-S1-31	1305003187	N/A	N/A
Directional coupler	AA-MCS	AAMCS-UDC	000272	N/A	N/A

1.4 EUT Photos

D750V3
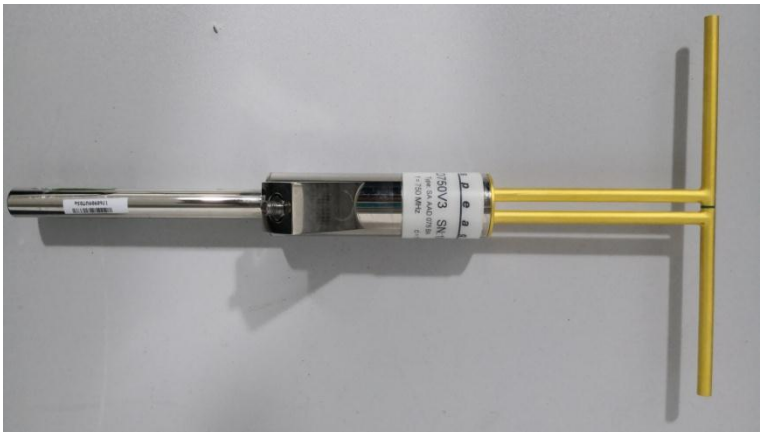
D835V2
D1750V2
D1900V2

D2450V2
D2600V2
D5GHzV2

2 SIMULATING LIQUID VERIFICATION

Liquid Type	Fre. (MHz)	Meas. Conductivity (σ) (S/m)	Meas. Permittivity (ε)	Target Conductivity (σ) (S/m)	Target Permittivity (ε)	Conductivity Tolerance (%)	Permittivity Tolerance (%)
Head	750	0.91	40.53	0.893	41.94	1.90	-3.36
Body	750	0.99	54.68	0.963	55.53	2.80	-1.53
Head	835	0.89	40.78	0.90	41.50	-1.11	-1.73
Body	835	0.98	53.86	0.97	55.20	1.03	-2.43
Head	1750	1.38	39.96	1.371	40.08	0.66	-0.30
Body	1750	1.45	52.56	1.488	53.43	-2.55	-1.63
Head	1900	1.43	39.71	1.40	40.00	2.14	-0.72
Body	1900	1.55	51.58	1.52	53.30	1.97	-3.23
Head	2450	1.84	38.94	1.80	39.20	2.22	-0.66
Body	2450	1.93	50.88	1.95	52.70	-1.03	-3.45
Head	2600	1.99	39.03	1.964	39.01	1.32	0.05
Body	2600	2.21	50.89	2.163	52.51	2.17	-3.09
Head	5250	4.63	36.06	4.706	35.93	-1.61	0.36
Body	5250	5.34	47.48	5.358	48.95	-0.34	-3.00
Head	5600	5.07	35.83	5.065	35.53	0.10	0.84
Body	5600	5.65	46.63	5.766	48.47	-2.01	-3.80
Head	5750	5.17	35.41	5.219	35.36	-0.94	0.14
Body	5750	5.87	46.28	5.942	48.27	-1.21	-4.12

3 DIPOLE IMPEDANCE AND RETURN LOSS

The dipoles are designed to have low return loss when presented against a flat phantom at the specified distance. A Vector Network Analyser was used to perform a return loss measurement on the specific dipole when in the measurement location against the phantom and the distance was specified by the manufacturer with a special, low loss and low relative permittivity spacer.
The impedance was measured at the SMA-connector with the network analyser.

The measurement of verification with return loss should not deviate by more than 20% and minimum of 20 dB of the return loss, and the impedance (real or imaginary parts) should not deviate by more than 5 Ohms from the previous measurement using network analyzer.

Note:
The “Previous Meas.” in the following table refer to dipoles or other equivalent RF sources calibration reports.

3.1 D750V3

RETURN LOSS AND IMPEDANCE IN HEAD LIQUID

Meas. Results	Current Meas.	Previous Meas.	Max. Deviation
Return Loss(dB)	-30.728	-29.563	3.7%
Impedance	52.793 Ω - 3.016 jΩ	51.740 Ω - 2.903 jΩ	1.053Ω (Real part)

Return Loss

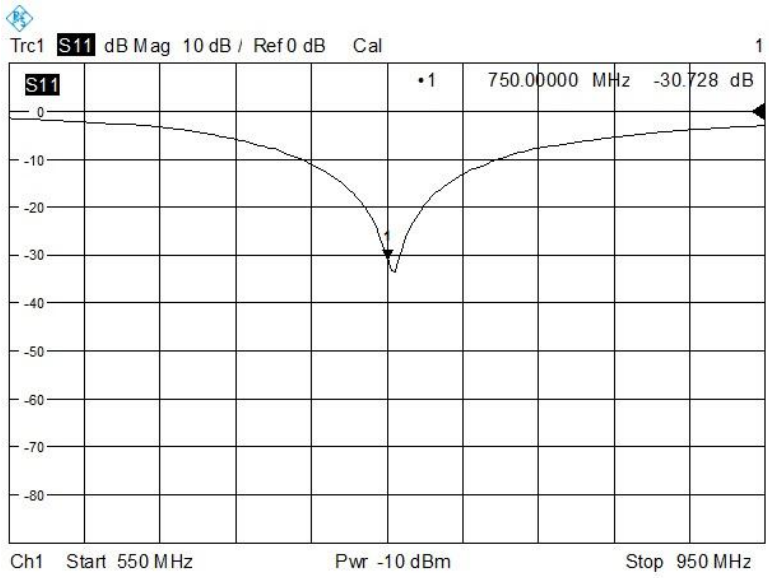

Impedance

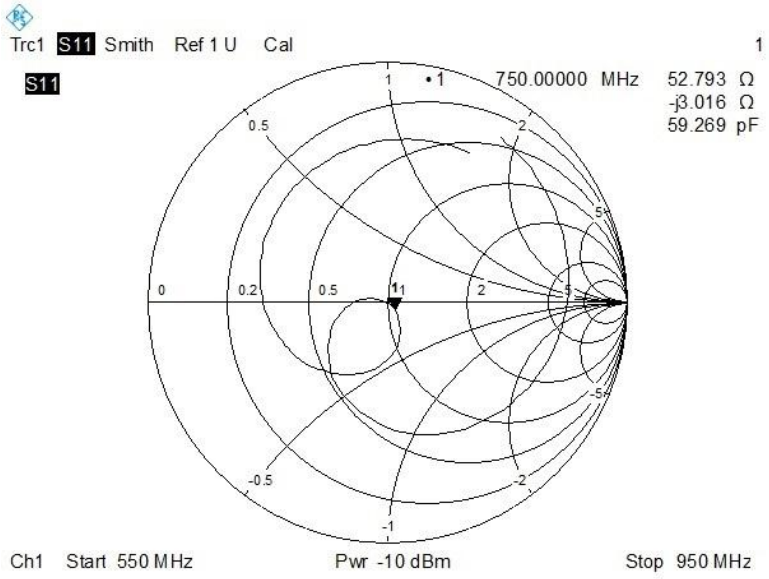

RETURN LOSS AND IMPEDANCE IN BODY LIQUID

Meas. Results	Current Meas.	Previous Meas.	Max. Deviation
Return Loss(dB)	-30.881	-29.870	3.4%
Impedance	51.921 Ω - 3.131 jΩ	49.994 Ω - 3.211 jΩ	1.927Ω (Real part)

Return Loss

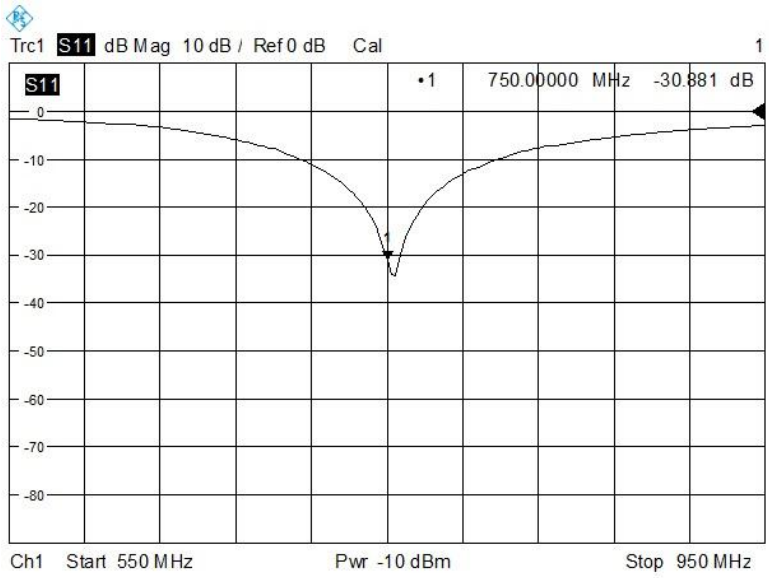

Impedance

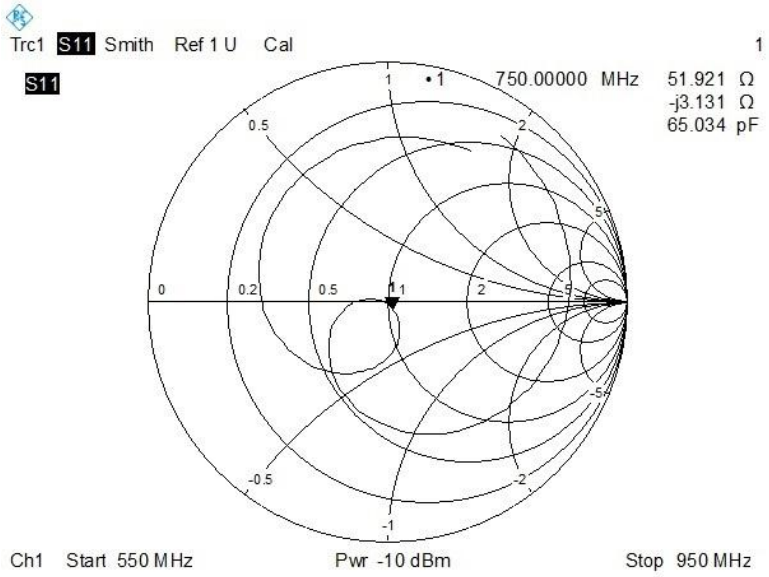

3.2 D835V2

RETURN LOSS AND IMPEDANCE IN HEAD LIQUID

Meas. Results	Current Meas.	Previous Meas.	Max. Deviation
Return Loss(dB)	-29.391	-30.413	-3.4%
Impedance	48.614 Ω - 2.557 jΩ	48.617 Ω - 2.634 jΩ	0.077Ω (Imaginary part)

Return Loss

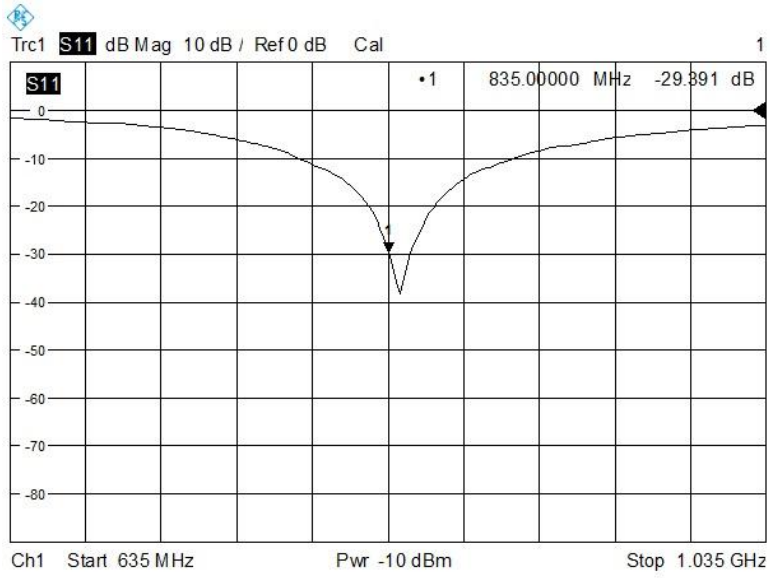

Impedance

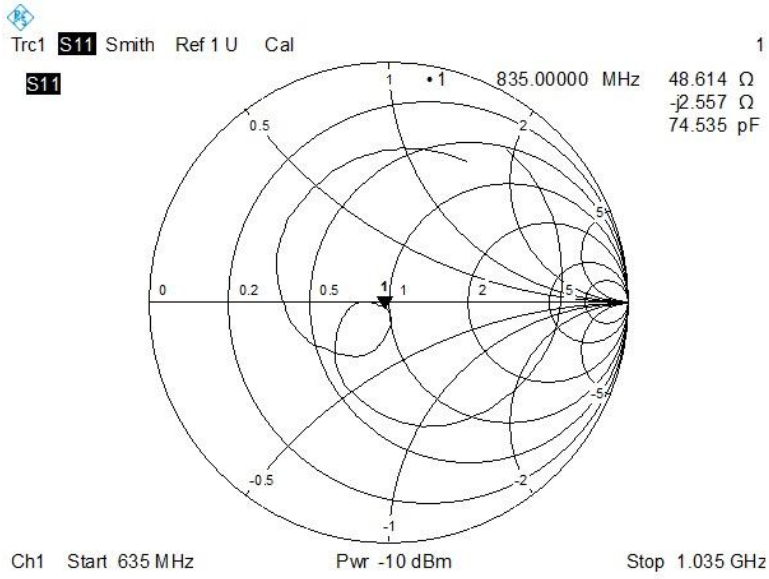

RETURN LOSS AND IMPEDANCE IN BODY LIQUID

Meas. Results	Current Meas.	Previous Meas.	Max. Deviation
Return Loss(dB)	-25.430	-24.862	2.3%
Impedance	46.544 Ω - 3.507 jΩ	45.749 Ω - 3.449 jΩ	-0.795Ω (Real part)

Return Loss

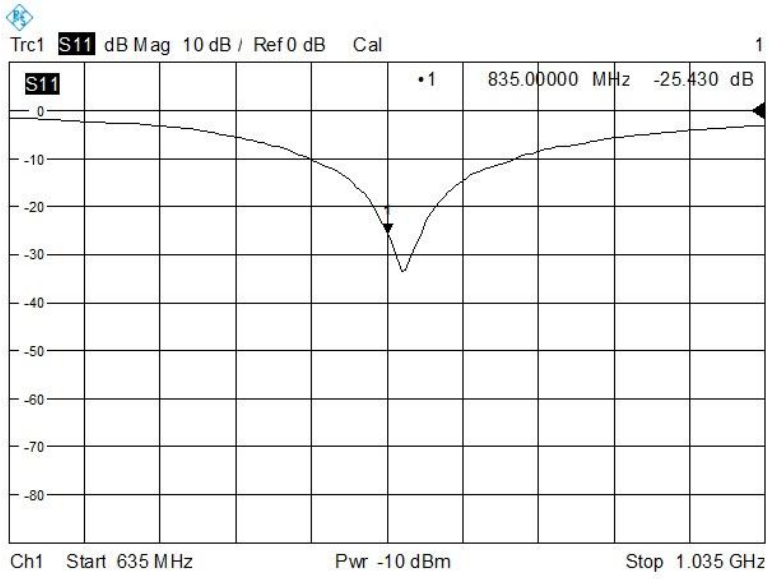

Impedance

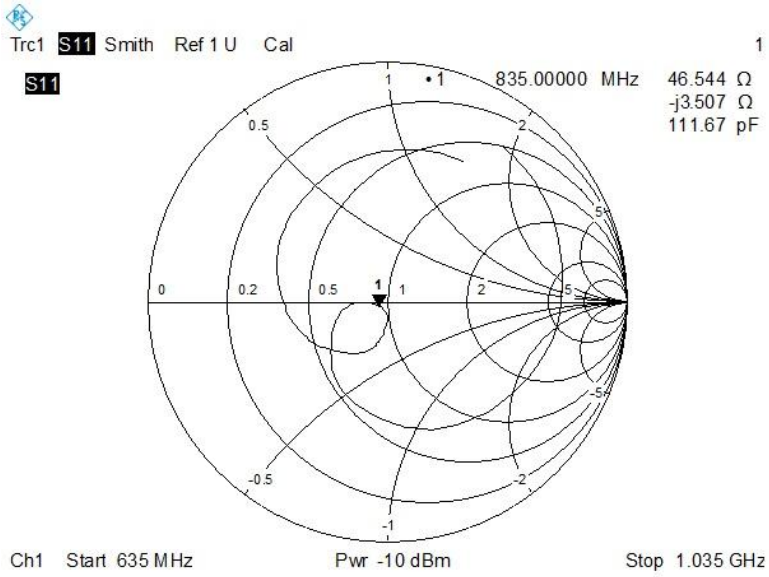

3.3 D1750V2

RETURN LOSS AND IMPEDANCE IN HEAD LIQUID

Meas. Results	Current Meas.	Previous Meas.	Max. Deviation
Return Loss(dB)	-34.478	-33.945	1.6%
Impedance	48.643 Ω - 1.407 jΩ	48.596 Ω -1.396 jΩ	0.047Ω (Real part)

Return Loss

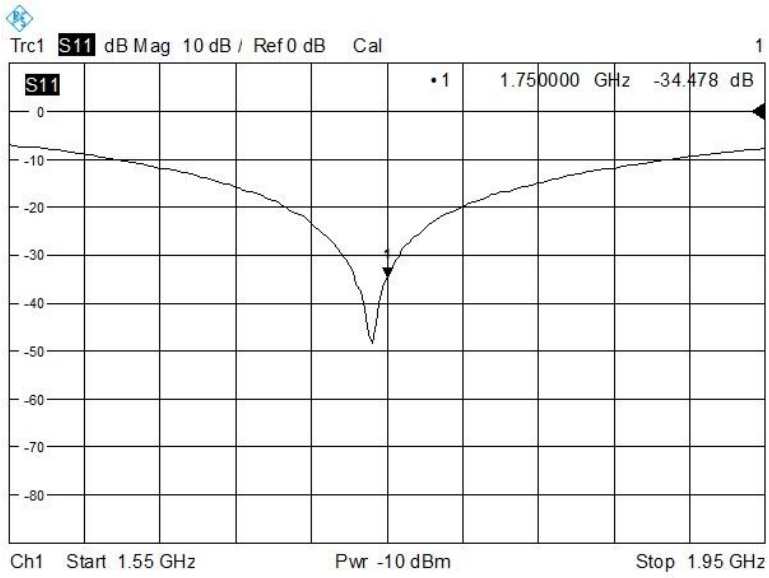

Impedance

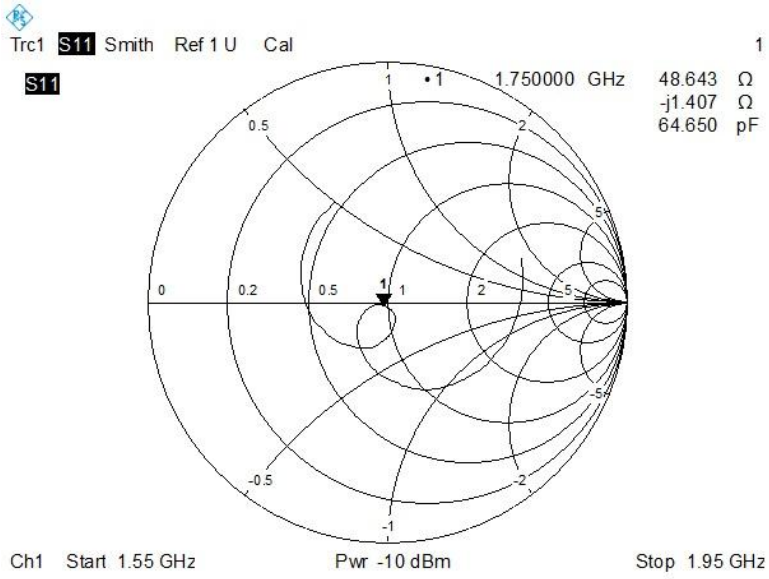

RETURN LOSS AND IMPEDANCE IN BODY LIQUID

Meas. Results	Current Meas.	Previous Meas.	Max. Deviation
Return Loss(dB)	-27.872	-27.463	1.5%
Impedance	46.763 Ω + 0.612 jΩ	45.981 Ω + 0.606 jΩ	0.782Ω (Real part)
Return Loss			

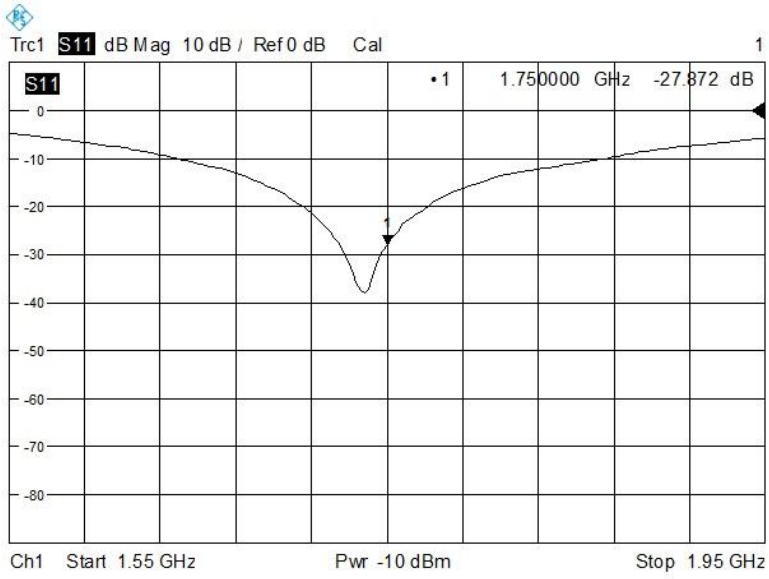

Impedance

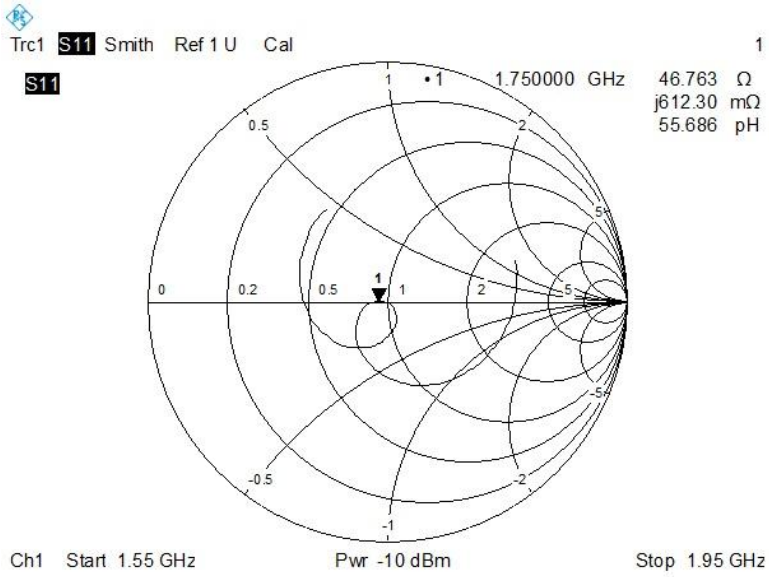

3.4 D1900V2

RETURN LOSS AND IMPEDANCE IN HEAD LIQUID

Meas. Results	Current Meas.	Previous Meas.	Max. Deviation
Return Loss(dB)	-25.822	-25.408	1.6%
Impedance	48.893 Ω + 5.253 jΩ	49.192 Ω + 5.268 jΩ	-0.299Ω (Real part)

Return Loss

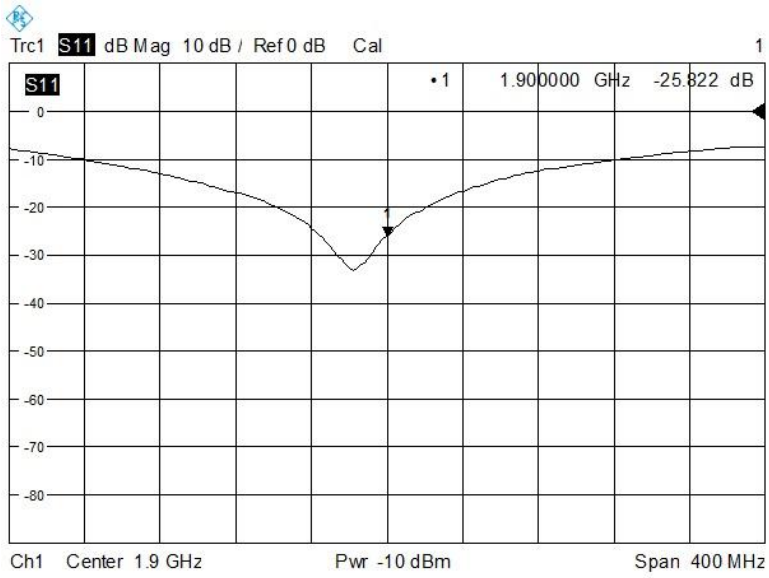

Impedance

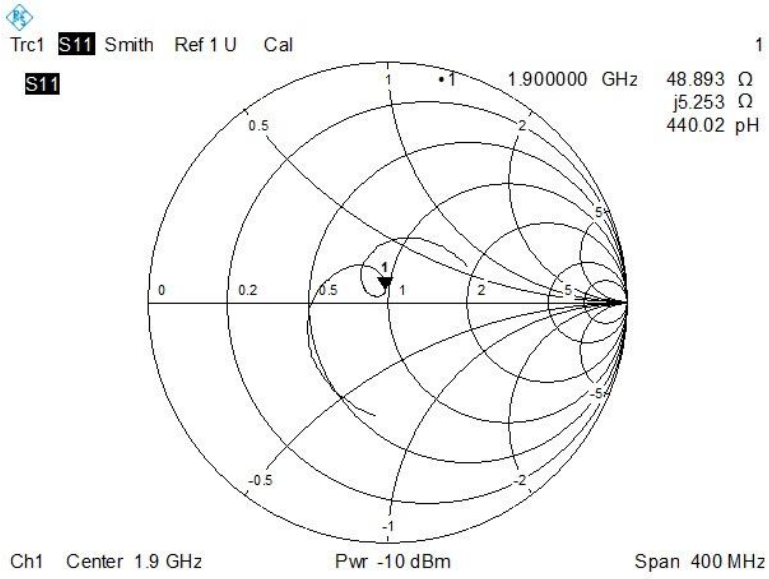

RETURN LOSS AND IMPEDANCE IN BODY LIQUID

Meas. Results	Current Meas.	Previous Meas.	Max. Deviation
Return Loss(dB)	-24.513	-24.883	-1.5%
Impedance	46.749 Ω + 4.221 jΩ	46.585 Ω + 4.324 jΩ	0.164Ω (Real part)

Return Loss

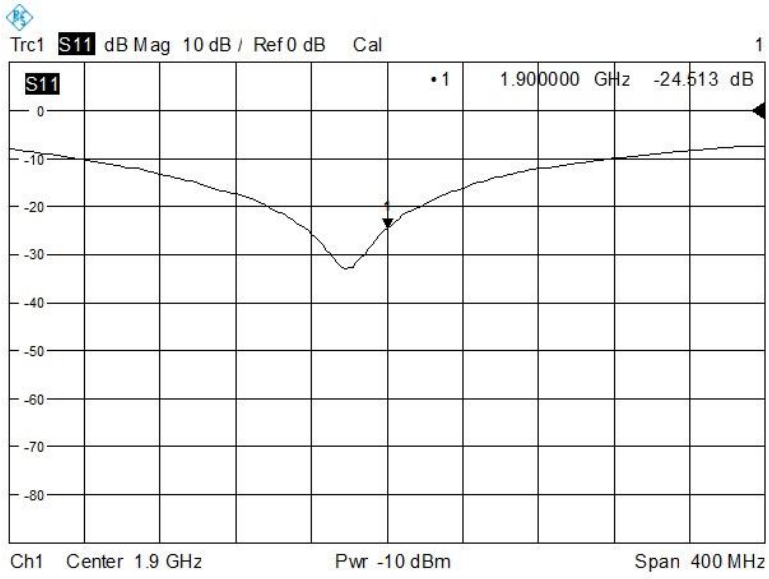

Impedance

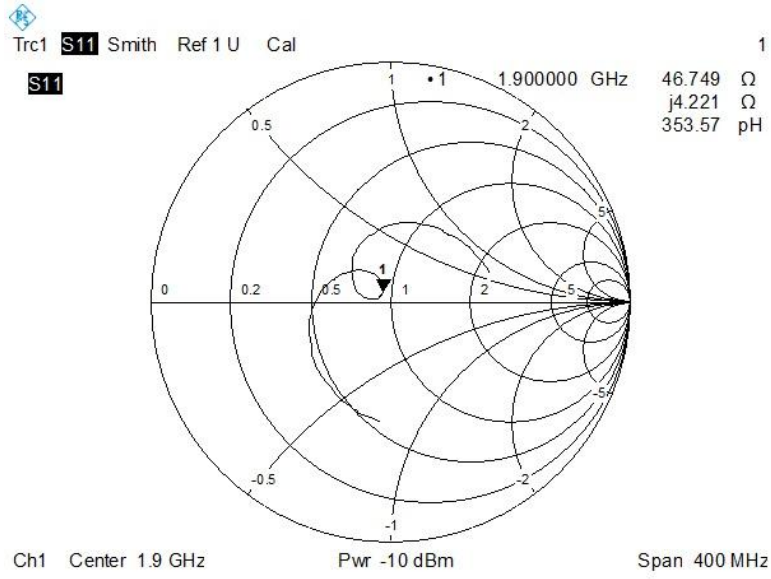

3.5 D2450V2

RETURN LOSS AND IMPEDANCE IN HEAD LIQUID

Meas. Results	Current Meas.	Previous Meas.	Max. Deviation
Return Loss (dB)	-28.271	-24.261	16.5%
Impedance	49.7 Ω + 1.669 jΩ	52.0 Ω + 5.937 jΩ	4.268Ω (Imaginary part)

Return Loss

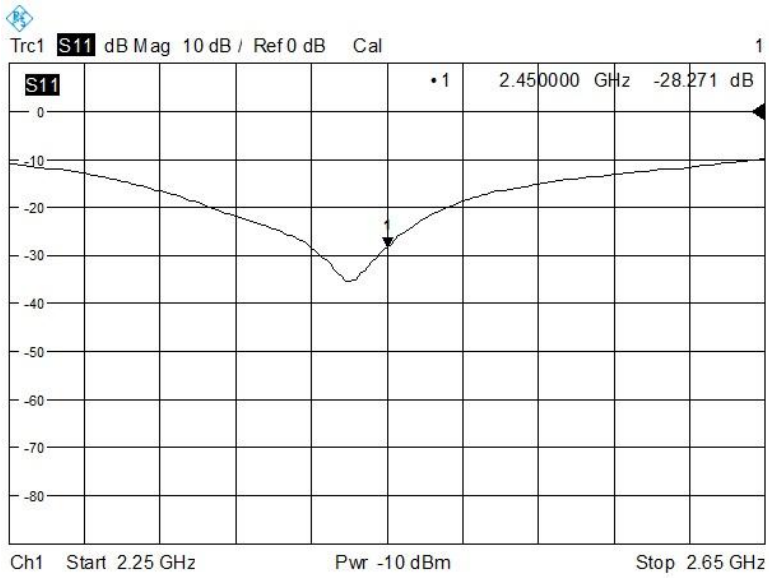

Impedance

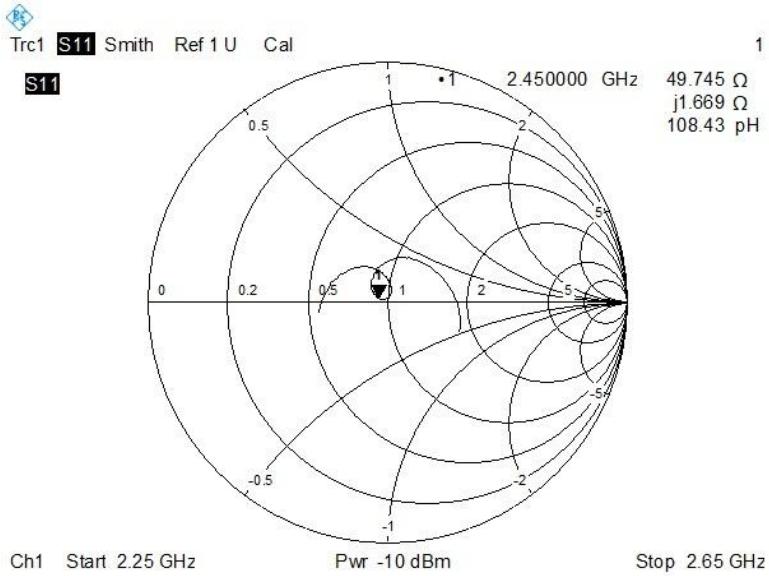

RETURN LOSS AND IMPEDANCE IN BODY LIQUID

Meas. Results	Current Meas.	Previous Meas.	Max. Deviation
Return Loss (dB)	-27.205	-23.809	14.3%
Impedance	46.8 Ω + 1.658 jΩ	48.7 Ω + 6.254 jΩ	4.596Ω (Imaginary part)

Return Loss

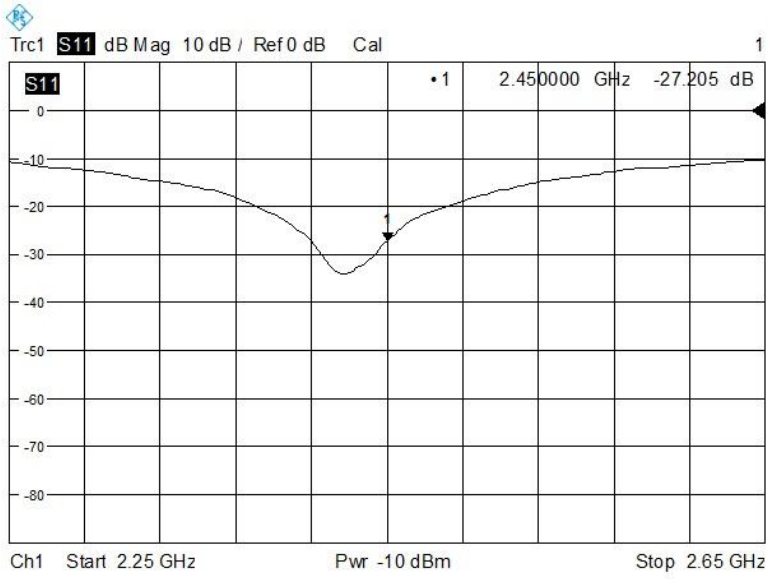

+Impedance

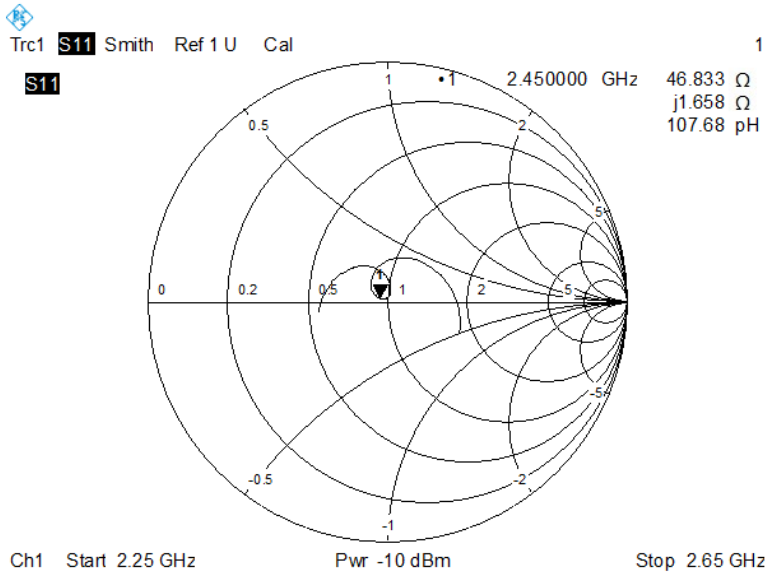

3.6 D2600V2

RETURN LOSS AND IMPEDANCE IN HEAD LIQUID

Meas. Results	Current Meas.	Previous Meas.	Max. Deviation
Return Loss(dB)	-22.192	-21.851	1.6%
Impedance	46.754 Ω -7.288 jΩ	47.178 Ω -7.354 jΩ	-0.424Ω (Real part)

Return Loss

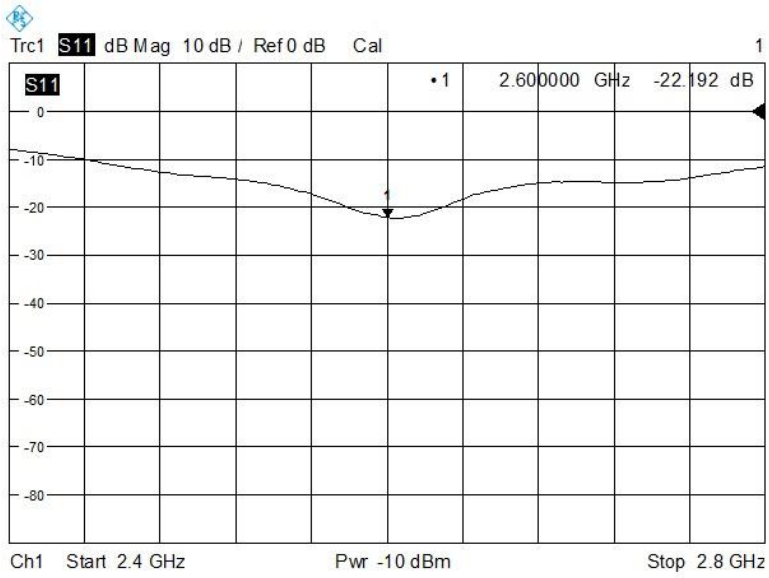

Impedance

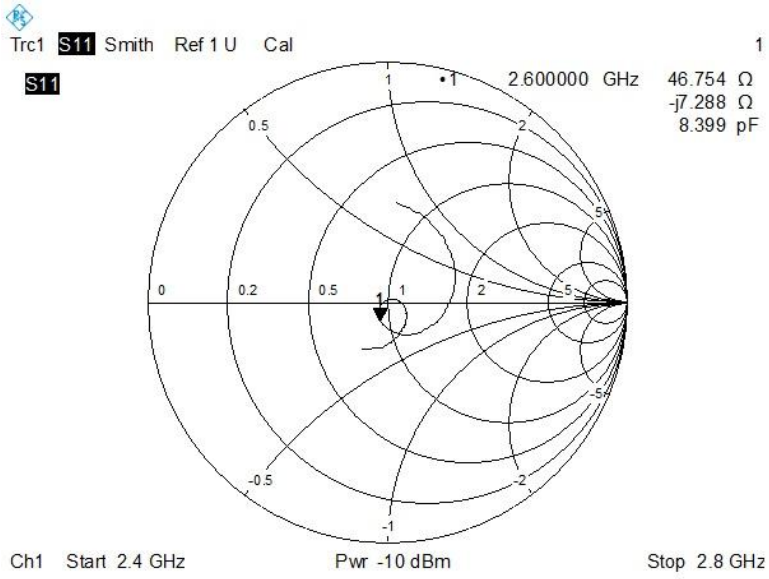

RETURN LOSS AND IMPEDANCE IN BODY LIQUID

Meas. Results	Current Meas.	Previous Meas.	Max. Deviation
Return Loss(dB)	-21.794	-21.481	1.5%
Impedance	46.334 Ω -5.883 jΩ	44.590 Ω -5.879 jΩ	1.744Ω (Real part)

Return Loss

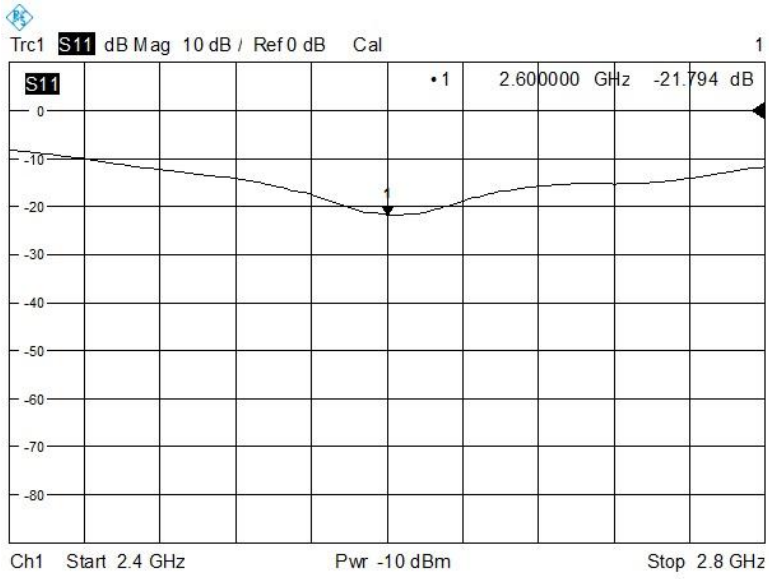

Impedance

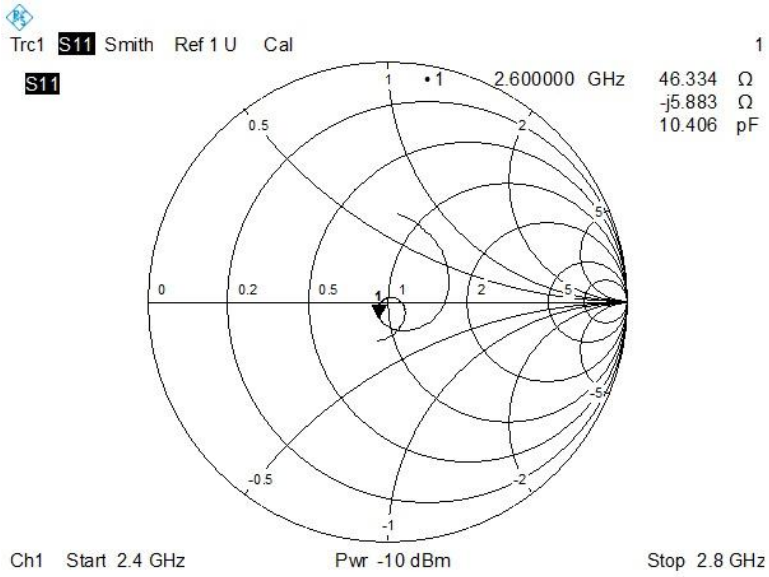

3.7 D5GHzV2

RETURN LOSS AND IMPEDANCE IN HEAD LIQUID

Meas. Results	Current Meas.	Previous Meas.	Max. Deviation
5250 MHz			
Return Loss(dB)	-25.052	-26.013	-3.7%
Impedance	47.735 Ω -4.621 jΩ	48.180 Ω -4.570 jΩ	0.445Ω (Real part)
5600 MHz			
Return Loss(dB)	-26.377	-25.418	3.8%
Impedance	54.525 Ω+2.142 jΩ	55.218 Ω +2.140 jΩ	0.693Ω (Real part)
5750 MHz			
Return Loss(dB)	-29.503	-29.687	-0.6%
Impedance	51.171 Ω -3.278 jΩ	50.573 Ω -3.249 jΩ	0.598Ω (Real part)

Return Loss

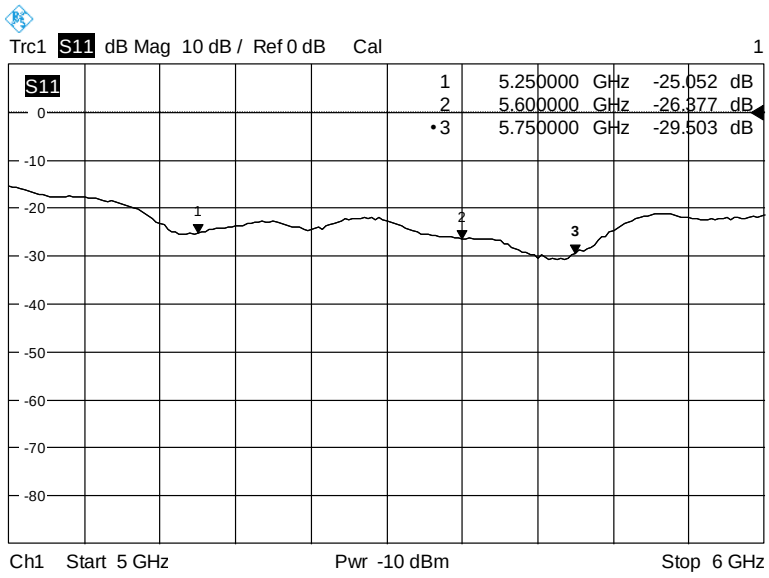

Impedance

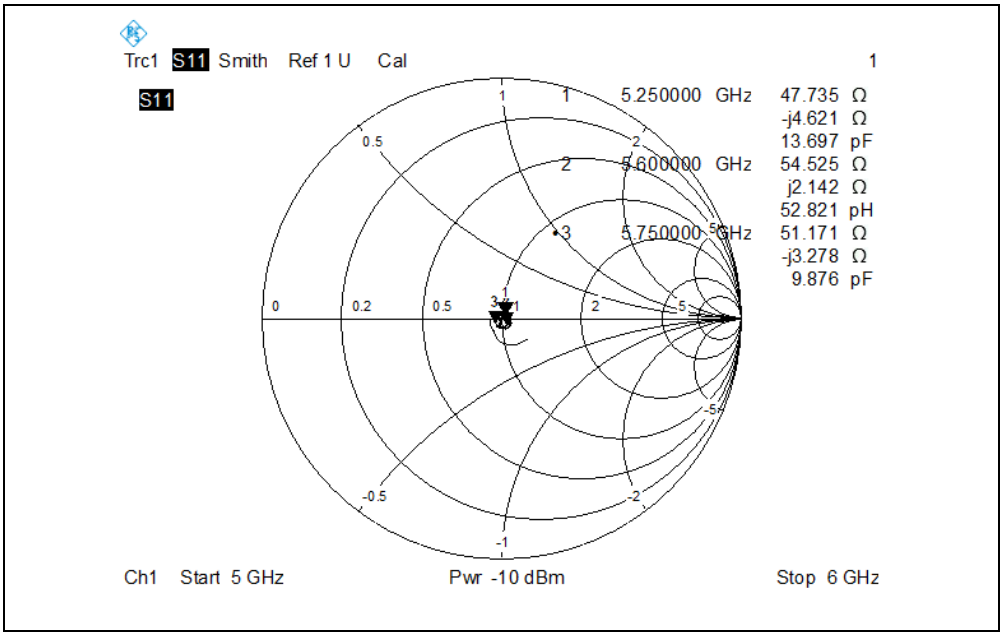
Trc1 S11 Smith Ref 1 U Cal
1
S11
1 5.250000 GHz 47.735 Ω
-j4.621 Ω
13.697 pF
2 5.600000 GHz 54.525 Ω
j2.142 Ω
52.821 pH
3 5.750000 GHz 51.171 Ω
-j3.278 Ω
9.876 pF
Ch1 Start 5 GHz
Pwr -10 dBm
Stop 6 GHz

RETURN LOSS AND IMPEDANCE IN BODY LIQUID

Meas. Results	Current Meas.	Previous Meas.	Max. Deviation
5250 MHz			
Return Loss(dB)	-30.483	-28.952	5.3%
Impedance	47.975 Ω -2.840 jΩ	47.902 Ω -2.794 jΩ	0.073Ω (Real part)
5600 MHz			
Return Loss(dB)	-24.636	-24.095	2.2%
Impedance	54.321 Ω + 3.910 jΩ	55.313 Ω + 3.876 jΩ	0.992Ω (Real part)
5750 MHz			
Return Loss(dB)	-29.774	-30.925	-3.7%
Impedance	51.737 Ω -2.126 jΩ	51.882 Ω -2.203 jΩ	0.145Ω (Real part)

Return Loss

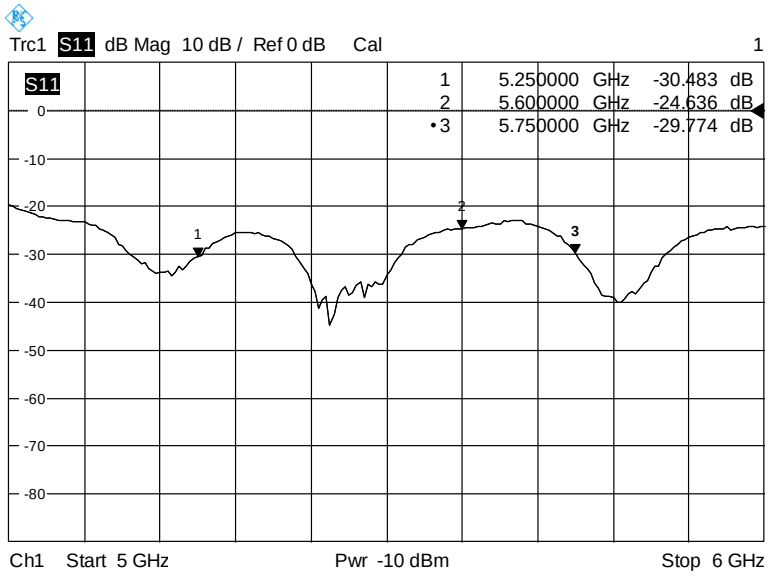

Impedance

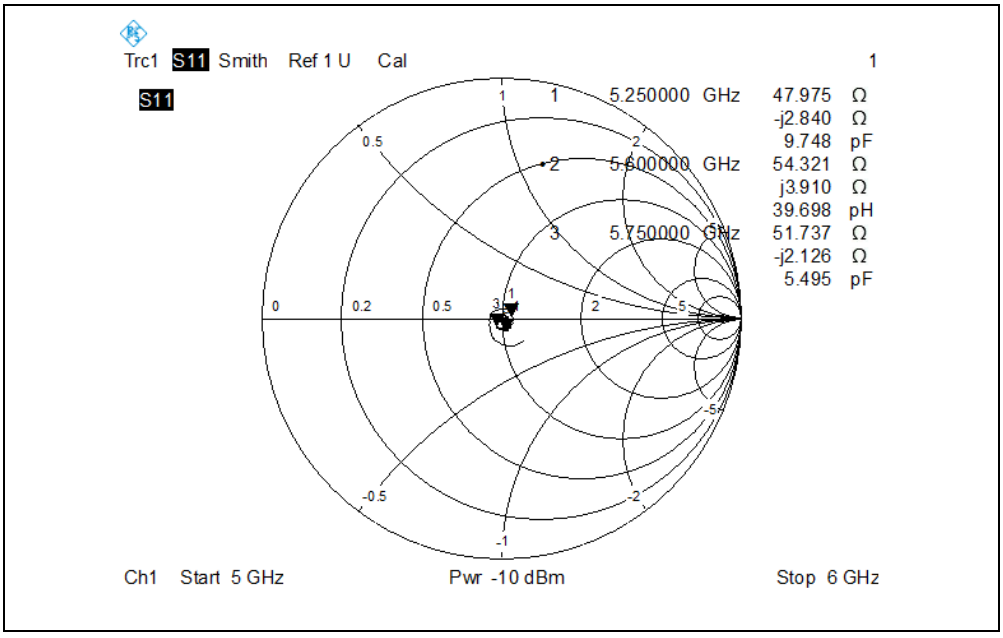
Trc1 S11 Smith Ref 1 U Cal
1
S11
1 5.250000 GHz 47.975 Ω
-j2.840 Ω
9.748 pF
2 5.600000 GHz 54.321 Ω
j3.910 Ω
39.698 pH
3 5.750000 GHz 51.737 Ω
-j2.126 Ω
5.495 pF
Ch1 Start 5 GHz
Pwr -10 dBm
Stop 6 GHz

4 VALIDATION MEASUREMENT

The IEEE Std. 1528, FCC KDBs and CEI/IEC 62209 standards state that the system validation measurements must be performed using a reference dipole meeting the fore mentioned return loss and mechanical dimension requirements. The validation measurement must be performed against a liquid filled flat phantom, with the phantom constructed as outlined in the fore mentioned standards. Per the standards, the dipole shall be positioned below the bottom of the phantom, with the dipole length centered and parallel to the longest dimension of the flat phantom, with the top surface of the dipole at the described distance from the bottom surface of the phantom.

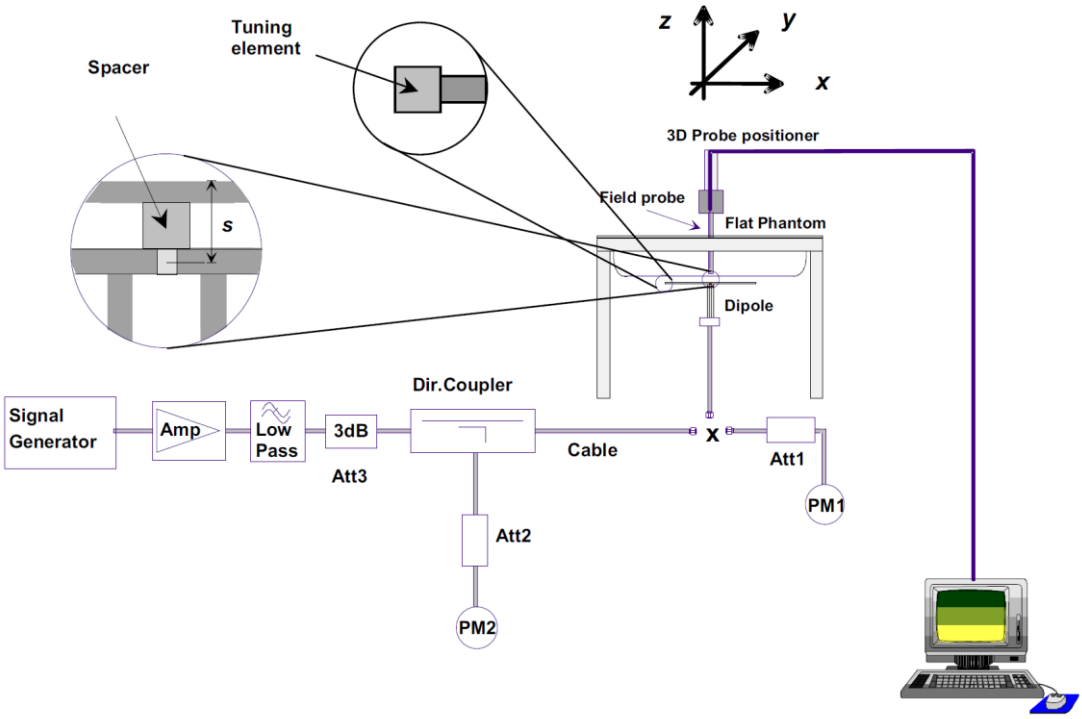

4.1 Dipole SAR Validation Measurement Result

Freq. (MHz)	Liquid Type	Power (mW)	1 g Measured SAR (W/kg)	Normalized SAR (W/kg)	10 g Measured SAR (W/kg)	Normalized SAR (W/kg)	1 g Targeted SAR (W/kg)	Tolerance (%)	10 g Targeted SAR (W/kg)	Tolerance (%)
750	Head	100	0.815	8.15	0.548	5.48	8.49	-4.00	5.55	-1.26
	Body	100	0.823	8.23	0.552	5.52	8.49	-3.06	5.55	-0.54
835	Head	100	0.996	9.96	0.641	6.41	9.56	4.18	6.22	3.05
	Body	100	0.963	9.63	0.636	6.36	9.56	0.73	6.22	2.25
1750	Head	100	3.590	35.90	1.870	18.70	36.40	-1.37	19.30	-3.11
	Body	100	3.810	38.10	1.990	19.90	36.40	4.67	19.30	3.11
1900	Head	100	4.030	40.30	2.090	20.90	39.70	1.51	20.50	1.95
	Body	100	3.840	38.40	1.970	19.70	39.70	-3.27	20.50	-3.90
2450	Head	100	5.390	53.90	2.380	23.80	52.40	2.86	24.00	-0.83
	Body	100	5.310	53.10	2.290	22.90	52.40	1.34	24.00	-4.58
2600	Head	100	5.840	58.40	2.490	24.90	55.30	5.61	24.60	1.22
	Body	100	5.830	58.30	2.510	25.10	55.30	5.42	24.60	2.03
5200	Head	100	7.980	79.80	2.130	21.30	76.50	4.31	21.60	-1.39
	Body	100	7.320	73.20	2.050	20.50	76.50	-4.31	21.60	-5.09
5600	Head	100	8.270	82.70	2.220	22.20	83.30	-0.72	23.40	-5.13
	Body	100	8.270	82.70	2.310	23.10	83.30	-0.72	23.40	-1.28
5800	Head	100	8.030	80.30	2.140	21.40	78.00	2.95	21.90	-2.28
	Body	100	7.730	77.30	2.120	21.20	78.00	-0.90	21.90	-3.20

4.2 D750V3

4.2.1 Dipole 750 MHz Validation Measurement for Head Tissue

Dipole 750 MHz; Type: D750V3; Serial: D750V3-SN:1055
Date/Time: 6/24/2018
Communication System Band: D750 (750.0 MHz); Frequency: 750 MHz; Duty Cycle: 1:1
Medium parameters used: f = 750 MHz; σ = 0.91 S/m; ε_r = 40.53; ρ = 1000 kg/m^3
Phantom section: Flat Section
Ambient Temperature: 22.2 Liquid Temperature: 21.1
DASY5 Configuration:

- Probe: ES3DV3 - SN3110; ConvF(6.16, 6.16, 6.16);
- Sensor-Surface: 4mm (Mechanical Surface Detection)
- Electronics: DAE4 Sn685;
- Phantom: SAM (30deg probe tilt) with CRP v5.0 Right 1859; Type: QD000P40CD; Serial: TP1859
- Measurement SW: DASY52, Version 52.8 (8); SEMCAD X Version 14.6.10 (7331)

Dipolevalidation measurement for Head Tissue/Pin= 100mW ,d=15mm/Zoom Scan (7x7x7)/Cube 0: Measurement grid: dx=5mm, dy=5mm, dz=5mm
Reference Value = 29.34 V/m; Power Drift = -0.04 dB
Peak SAR (extrapolated) = 1.19 W/kg
SAR(1 g) = 0.815 W/kg; SAR(10 g) = 0.548 W/kg
Maximum value of SAR (measured) = 0.878 W/kg

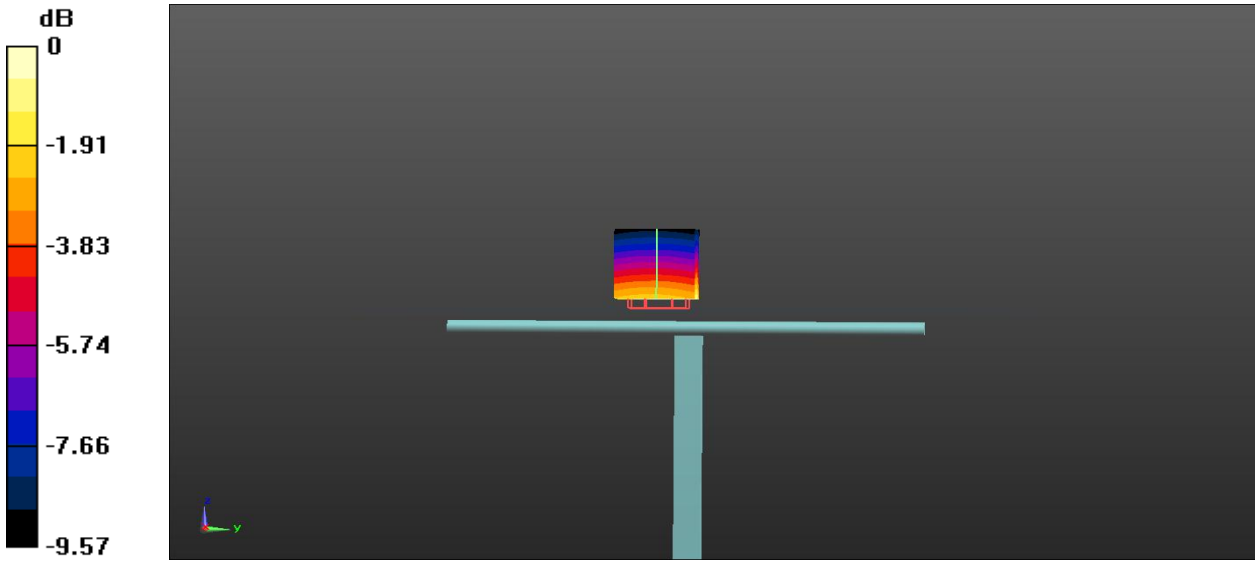

0 dB = 0.878 W/kg = -0.57 dBW/kg

4.2.2 Dipole 750 MHz Validation Measurement for Body Tissue

Dipole 750 MHz; Type: D750V3; Serial: D750V3-SN:1055
Date/Time: 6/24/2018
Communication System Band: D750 (750.0 MHz); Frequency: 750 MHz;Duty Cycle: 1:1
Medium parameters used: f = 750 MHz; σ = 0.99 S/m; ε_r = 54.68; ρ = 1000 kg/m^3
Phantom section: Flat Section
Ambient Temperature: 22.2 Liquid Temperature: 21.1
DASY5 Configuration:

- Probe: ES3DV3 - SN3110; ConvF(6.15, 6.15, 6.15);
- Sensor-Surface: 4mm (Mechanical Surface Detection)
- Electronics: DAE4 Sn685
- Phantom: SAM (30deg probe tilt) with CRP v5.0 on Right 1857; Type: QD000P40CD; Serial: TP1857
- Measurement SW: DASY52, Version 52.8 (8); SEMCAD X Version 14.6.10 (7331)

Dipolevalidation measurement for Body Tissue/Pin= 100mW ,d=15mm /Zoom Scan (7x7x7)/Cube 0: Measurement grid: dx=5mm, dy=5mm, dz=5mm
Reference Value = 30.58 V/m; Power Drift = -0.03 dB
Peak SAR (extrapolated) = 1.21 W/kg
SAR(1 g) = 0.823 W/kg; SAR(10 g) = 0.552 W/kg
Maximum value of SAR (measured) = 0.885 W/kg

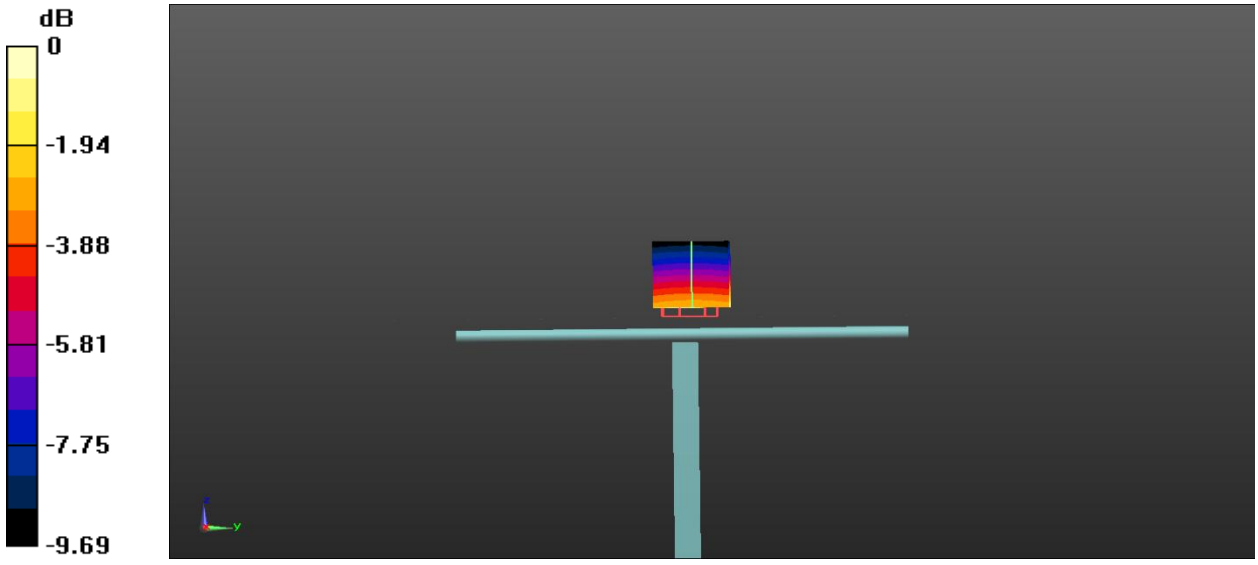

0 dB = 0.885 W/kg = -0.53 dBW/kg

4.3 D835V2

4.3.1 Dipole 835 MHz Validation Measurement for Head Tissue

Dipole 835 MHz; Type: D835V2; Serial: D835V2-SN:4d187
Date/Time: 6/24/2018
Communication System Band: D835 (835.0 MHz); Frequency: 835 MHz; Duty Cycle: 1:1
Medium parameters used: f = 835 MHz; σ = 0.89 S/m; εr = 40.78 ρ = 1000 kg/m3
Phantom section: Flat Section
Ambient Temperature: 22.2 Liquid Temperature: 21.1
DASY5 Configuration:

- Probe: ES3DV3 - SN3110; ConvF(6.1, 6.1, 6.1);
- Sensor-Surface: 4mm (Mechanical Surface Detection)
- Electronics: DAE4 Sn685
- Phantom: SAM (30deg probe tilt) with CRP v5.0 on Right 1857; Type: QD000P40CD; Serial: TP1857
- Measurement SW: DASY52, Version 52.8 (8); SEMCAD X Version 14.6.10 (7331)

Dipole validation measurement for Head Tissue/Pin= 100mW , d=15mm/Zoom Scan (7x7x7)/Cube 0: Measurement grid: dx=5mm, dy=5mm, dz=5mm
Reference Value = 33.47 V/m; Power Drift = -0.01 dB
Peak SAR (extrapolated) = 1.48 W/kg
SAR(1 g) = 0.996 W/kg; SAR(10 g) = 0.641 W/kg
Maximum value of SAR (measured) = 1.06 W/kg

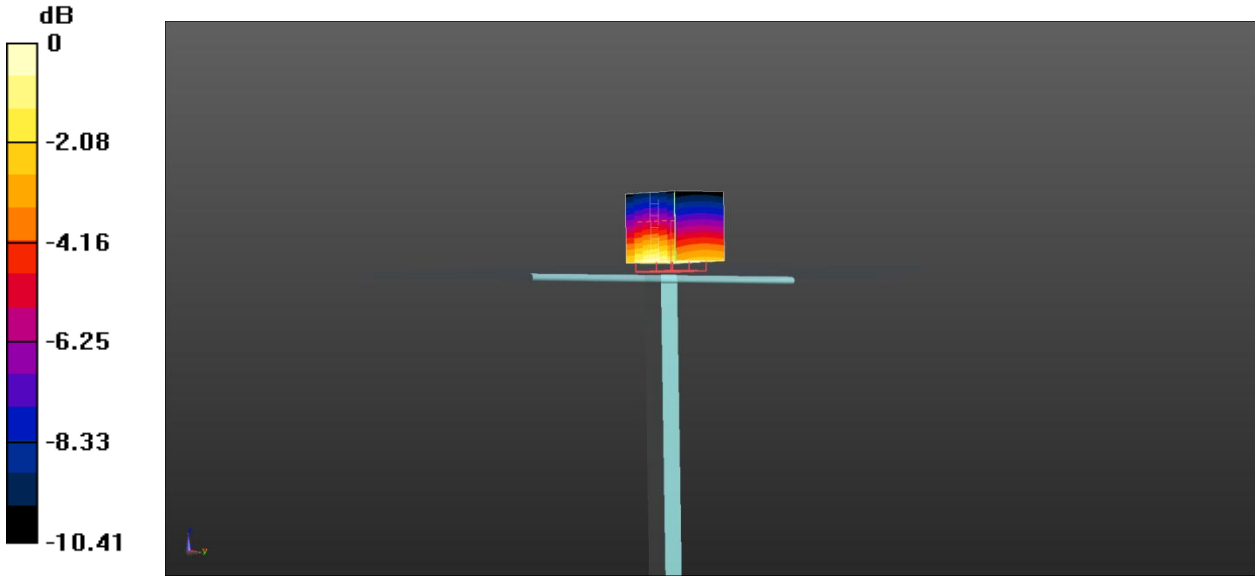

0 dB = 1.06 W/kg = 0.25 dBW/kg

4.3.2 Dipole 835 MHz Validation Measurement for Body Tissue

Dipole 835 MHz; Type: D835V2; Serial: D835V2-SN:4d187
Date/Time: 6/24/2018
Communication System Band: D835 (835.0 MHz); Frequency: 835 MHz;Duty Cycle: 1:1
Medium parameters used: f = 835 MHz; σ = 0.98 S/m; εr = 53.86; ρ = 1000 kg/m3
Phantom section: Flat Section
Ambient Temperature: 22.2 Liquid Temperature: 21.1
DASY5 Configuration:

- Probe: ES3DV3 - SN3110; ConvF(6.1, 6.1, 6.1);
- Sensor-Surface: 4mm (Mechanical Surface Detection)
- Electronics: DAE4 Sn685
- Phantom: SAM (30deg probe tilt) with CRP v5.0 on Right 1857; Type: QD000P40CD; Serial: TP1857
- Measurement SW: DASY52, Version 52.8 (8); SEMCAD X Version 14.6.10 (7331)

Dipole validation measurement for Body Tissue/Pin= 100mW , d=15mm /Zoom Scan (7x7x7)/Cube 0: Measurement grid: dx=5mm, dy=5mm, dz=5mm
Reference Value = 31.61 V/m; Power Drift = -0.11 dB
Peak SAR (extrapolated) = 1.41 W/kg
SAR(1 g) = 0.963 W/kg; SAR(10 g) = 0.636 W/kg
Maximum value of SAR (measured) = 1.04 W/kg

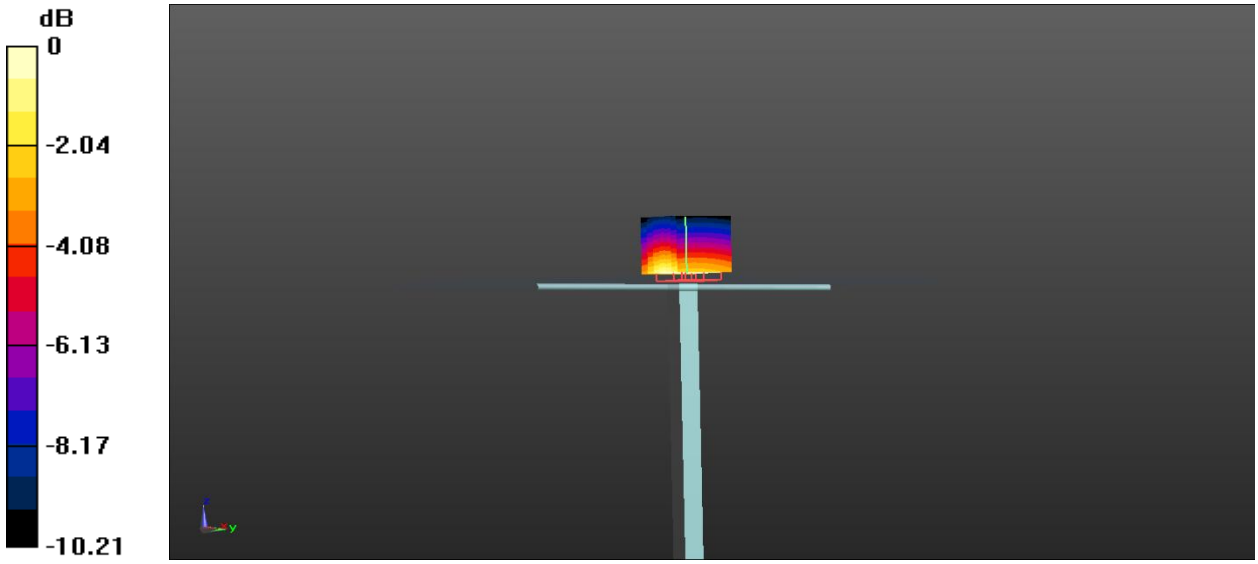

0 dB = 1.04 W/kg = 0.17 dBW/kg

4.4 D1750V2

4.4.1 Dipole 1750 MHz Validation Measurement for Head Tissue

Dipole 1750 MHz; Type: D1750V2; Serial: D1750V2-SN: 1130
Date/Time: 6/26/2018
Communication System Band: D1750 (1750.0 MHz); Frequency: 1750 MHz;Duty Cycle: 1:1
Medium parameters used: f = 1750 MHz; σ = 1.38 S/m; εr = 39.96; ρ = 1000 kg/m3
Phantom section: Flat Section
Ambient Temperature:22.4 Liquid Temperature:21.3
DASY5 Configuration:

- Probe: ES3DV3 - SN3110; ConvF(5.17, 5.17, 5.17);
- Sensor-Surface: 4mm (Mechanical Surface Detection)
- Electronics: DAE4 Sn685
- Phantom: SAM (30deg probe tilt) with CRP v5.0 on Left 1859; Type: QD000P40CD; Serial: TP1859
- Measurement SW: DASY52, Version 52.8 (8); SEMCAD X Version 14.6.10 (7331)

Dipole validation measurement for Head Tissue/Pin= 100mW ,d=10mm /Zoom Scan (7x7x7)/Cube 0: Measurement grid: dx=5mm, dy=5mm, dz=5mm
Reference Value = 50.02 V/m; Power Drift = 0.04 dB
Peak SAR (extrapolated) = 6.67 W/kg
SAR(1 g) = 3.59W/kg; SAR(10 g) = 1.87 W/kg
Maximum value of SAR (measured) = 3.98 W/kg

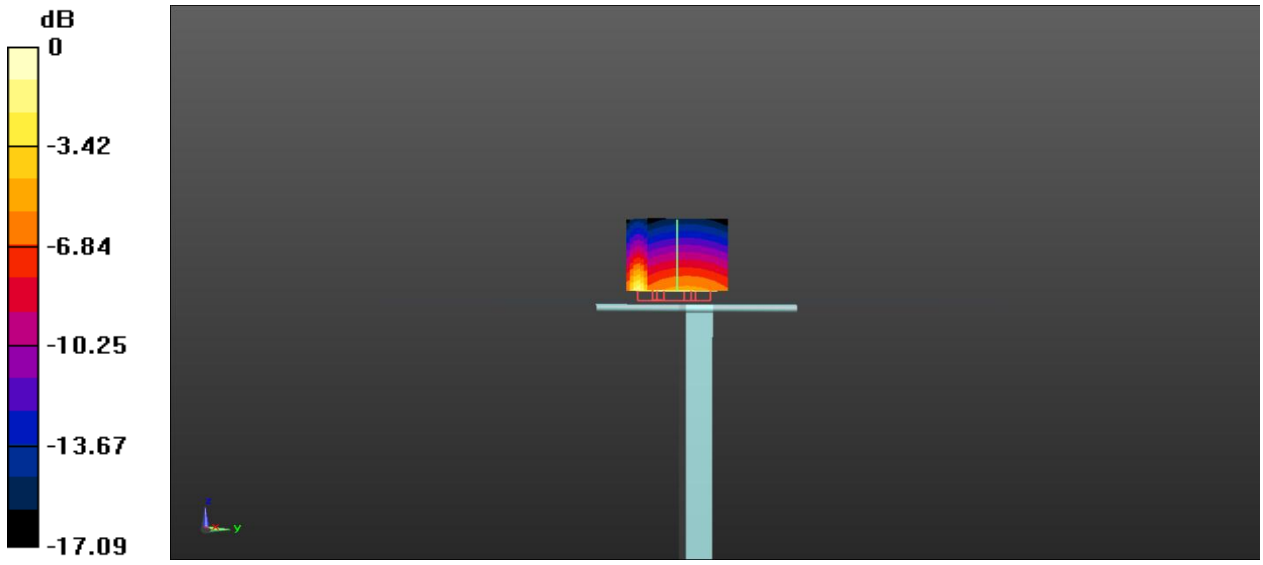

0 dB = 3.98 W/kg = 5.80 dBW/kg

4.4.2 Dipole 1750 MHz Validation Measurement for Body Tissue

Dipole 1750 MHz; Type: D1750V2; Serial: D1750V2-SN:1130
Date/Time: 6/26/2018
Communication System Band: D1750 (1750.0 MHz); Frequency: 1750 MHz;Duty Cycle: 1:1
Medium parameters used: f = 1750 MHz; σ = 1.45 S/m; εr = 52.56; ρ = 1000 kg/m3
Phantom section: Flat Section
Ambient Temperature:22.4 Liquid Temperature:21.3
DASY5 Configuration:

- Probe: ES3DV3 - SN3110; ConvF(4.87, 4.87, 4.87);
- Sensor-Surface: 4mm (Mechanical Surface Detection)
- Electronics: DAE4 Sn685
- Phantom: SAM (30deg probe tilt) with CRP v5.0 on Left 1859; Type: QD000P40CD; Serial: TP1859
- Measurement SW: DASY52, Version 52.8 (8); SEMCAD X Version 14.6.10 (7331)

Dipole validation measurement for Body Tissue/Pin= 100mW ,d=10mm /Zoom Scan (7x7x7)/Cube 0: Measurement grid: dx=5mm, dy=5mm, dz=5mm
Reference Value = 54.61 V/m; Power Drift = -0.03 dB
Peak SAR (extrapolated) = 6.98 W/kg
SAR(1 g) = 3.81 W/kg; SAR(10 g) = 1.99 W/kg
Maximum value of SAR (measured) = 4.26 W/kg

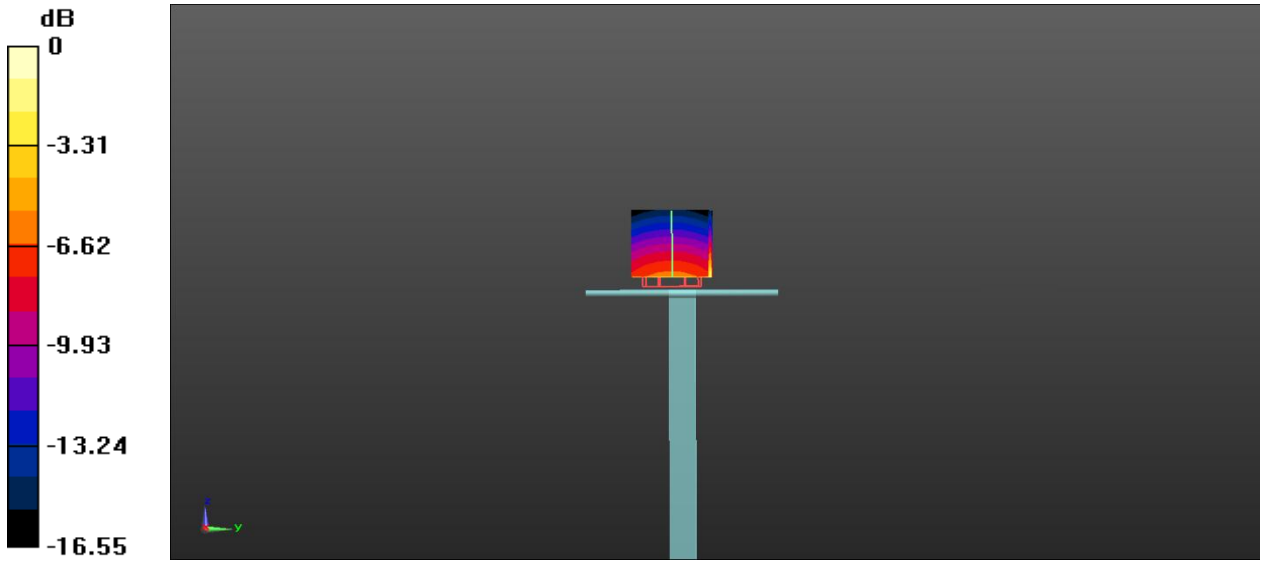

0 dB = 4.26 W/kg = 6.29 dBW/kg

4.5 D1900V2

4.5.1 Dipole 1900 MHz Validation Measurement for Head Tissue

Dipole 1900 MHz; Type: D1900V2; Serial: D1900V2-SN:5d193
Date/Time: 6/26/2018
Communication System Band: D1900 (1900.0 MHz); Frequency: 1900 MHz;Duty Cycle: 1:1
Medium parameters used: f = 1900 MHz; σ = 1.43 S/m; εr = 39.71; ρ = 1000 kg/m3
Phantom section: Flat Section
Ambient Temperature:22.4 Liquid Temperature:21.3
DASY5 Configuration:

- Probe: ES3DV3 - SN3110; ConvF(4.87, 4.87, 4.87);
- Sensor-Surface: 4mm (Mechanical Surface Detection)
- Electronics: DAE4 Sn685
- Phantom: SAM (30deg probe tilt) with CRP v5.0 on Left 1859; Type: QD000P40CD; Serial: TP1859
- Measurement SW: DASY52, Version 52.8 (8); SEMCAD X Version 14.6.10 (7331)

Dipole validation measurement for Head Tissue/Pin= 100mW ,d=10mm /Zoom Scan (7x7x7)/Cube 0: Measurement grid: dx=5mm, dy=5mm, dz=5mm
Reference Value = 53.57 V/m; Power Drift = -0.07 dB
Peak SAR (extrapolated) = 7.42 W/kg
SAR(1 g) = 4.03 W/kg; SAR(10 g) = 2.09 W/kg
Maximum value of SAR (measured) = 4.55 W/kg

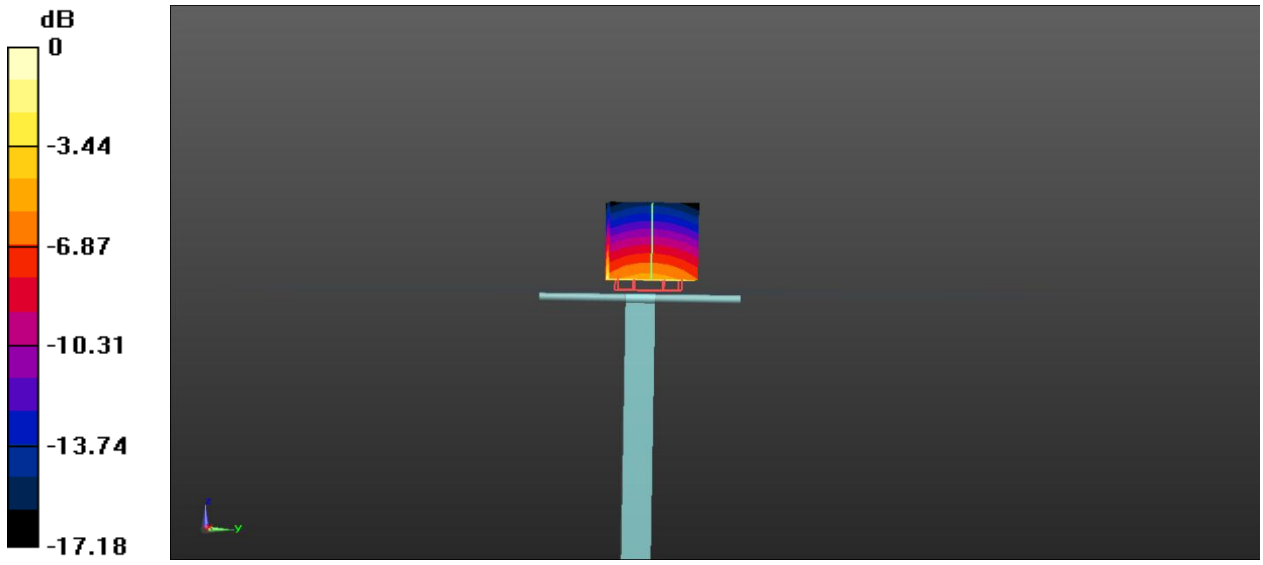

0 dB = 4.55 W/kg = 6.58 dBW/kg

4.5.2 Dipole 1900 MHz Validation Measurement for Body Tissue

Dipole 1900 MHz; Type: D1900V2; Serial: D1900V2-SN:5d193
Date/Time: 6/26/2018
Communication System Band: D1900 (1900.0 MHz); Frequency: 1900 MHz;Duty Cycle: 1:1
Medium parameters used: f = 1900 MHz; σ = 1.55 S/m; εr = 51.58; ρ = 1000 kg/m3
Phantom section: Flat Section
Ambient Temperature:22.4 Liquid Temperature:21.3
DASY5 Configuration:

- Probe: ES3DV3 - SN3110; ConvF(4.61, 4.61, 4.61);
- Sensor-Surface: 4mm (Mechanical Surface Detection)
- Electronics: DAE4 Sn685
- Phantom: SAM (30deg probe tilt) with CRP v5.0 on Right 1857; Type: QD000P40CD; Serial: TP1857
- Measurement SW: DASY52, Version 52.8 (8); SEMCAD X Version 14.6.10 (7331)

Dipole validation measurement for Body Tissue/Pin= 100mW ,d=10mm /Zoom Scan (7x7x7)/Cube 0: Measurement grid: dx=5mm, dy=5mm, dz=5mm
Reference Value = 52.57 V/m; Power Drift = -0.08 dB
Peak SAR (extrapolated) = 7.15 W/kg
SAR(1 g) = 3.84 W/kg; SAR(10 g) = 1.97 W/kg
Maximum value of SAR (measured) = 4.28 W/kg

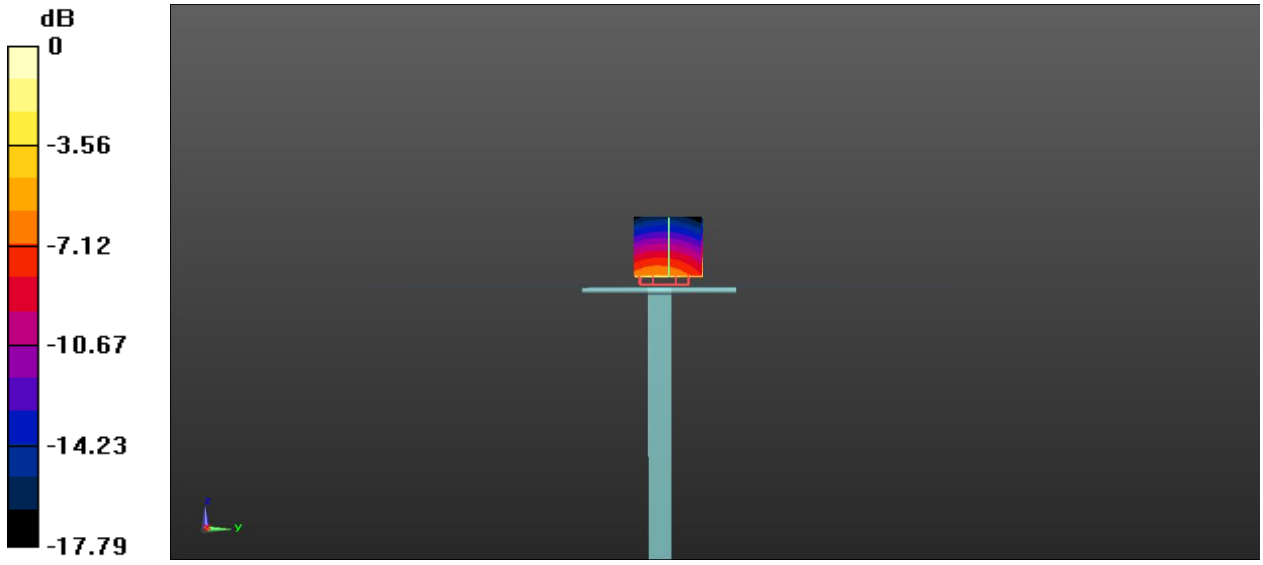

0 dB = 4.28 W/kg = 6.31 dBW/kg

4.6 D2450V2

4.6.1 Dipole 2450 MHz Validation Measurement for Head Tissue

Dipole 2450 MHz; Type: D2450V2; Serial: D2450V2-SN:952
Date/Time: 3/16/2018
Communication System Band: CD2450 (2450.0 MHz); Frequency: 2450 MHz;Duty Cycle: 1:1
Medium parameters used: f = 2450 MHz; σ = 1.84 S/m; ε_r = 38.94; ρ = 1000 kg/m^3
Phantom section: Flat Section
Ambient Temperature:22.5 Liquid Temperature:21.3
DASY5 Configuration:

- Probe: ES3DV3 - SN3110; ConvF(4.4, 4.4, 4.4);
- Sensor-Surface: 4mm (Mechanical Surface Detection)
- Electronics: DAE4 Sn685;
- Phantom: SAM (30deg probe tilt) with CRP v5.0 Right 1857; Type: QD000P40CD; Serial: TP1857
- Measurement SW: DASY52, Version 52.8 (8); SEMCAD X Version 14.6.10 (7331)

Dipole validation measurement for Head Tissue/Pin= 100mW ,d=10mm/Zoom Scan (7x7x7)/Cube 0: Measurement grid: dx=5mm, dy=5mm, dz=5mm
Reference Value = 54.28 V/m; Power Drift = 0.07 dB
Peak SAR (extrapolated) = 11.8 W/kg
SAR(1 g) = 5.39 W/kg; SAR(10 g) = 2.38 W/kg
Maximum value of SAR (measured) = 6.21 W/kg

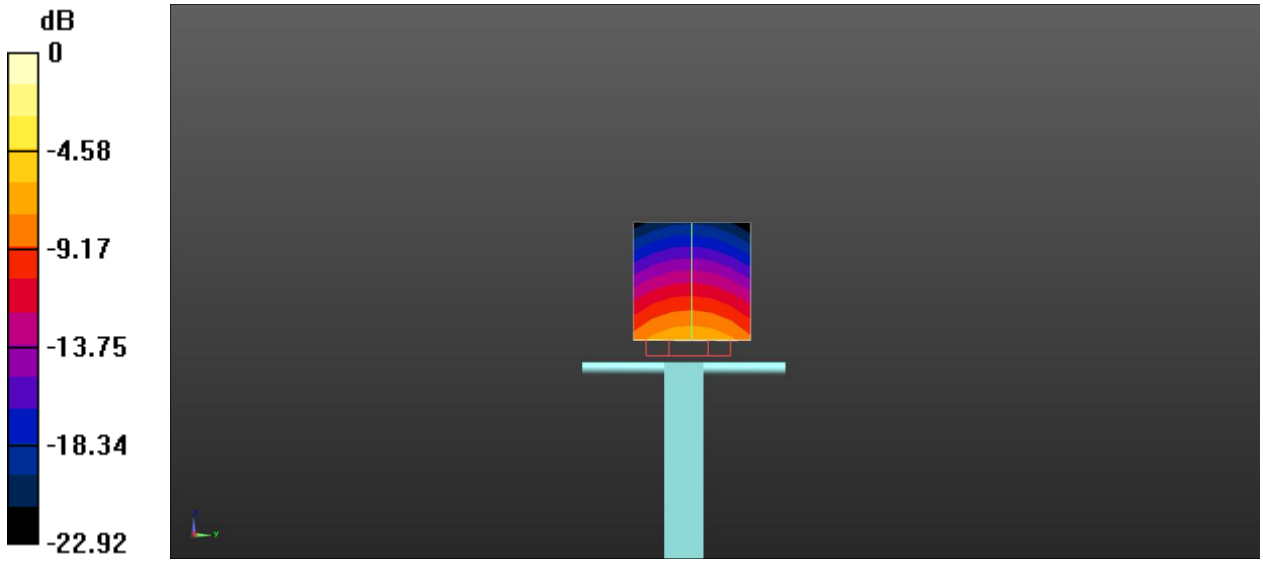

0 dB = 6.21 W/kg = 7.93 dBW/kg

4.6.2 Dipole 2450 MHz Validation Measurement for Body Tissue

Dipole 2450 MHz; Type: D2450V2; Serial: D2450V2-SN:952
Date/Time: 3/16/2018
Communication System Band: D2450 (2450.0 MHz); Frequency: 2450 MHz;Duty Cycle: 1:1
Medium parameters used: f = 2450 MHz; σ = 1.93 S/m; ε_r = 50.88; ρ = 1000 kg/m^3
Phantom section: Flat Section
Ambient Temperature:22.5 Liquid Temperature:21.3
DASY5 Configuration:

- Probe: ES3DV3 - SN3110; ConvF(4.23, 4.23, 4.23);
- Sensor-Surface: 4mm (Mechanical Surface Detection)
- Electronics: DAE4 Sn685;
- Phantom: SAM (30deg probe tilt) with CRP v5.0 left 1859; Type: QD000P40CD; Serial: TP1859
- Measurement SW: DASY52, Version 52.8 (8); SEMCAD X Version 14.6.10 (7331)

Dipole validation measurement for Body Tissue/Pin= 100mW ,d=10mm /Zoom Scan (7x7x7)/Cube 0: Measurement grid: dx=5mm, dy=5mm, dz=5mm
Reference Value = 49.11 V/m; Power Drift = -0.04 dB
Peak SAR (extrapolated) = 10.9 W/kg
SAR(1 g) = 5.31 W/kg; SAR(10 g) = 2.29 W/kg
Maximum value of SAR (measured) = 5.92 W/kg

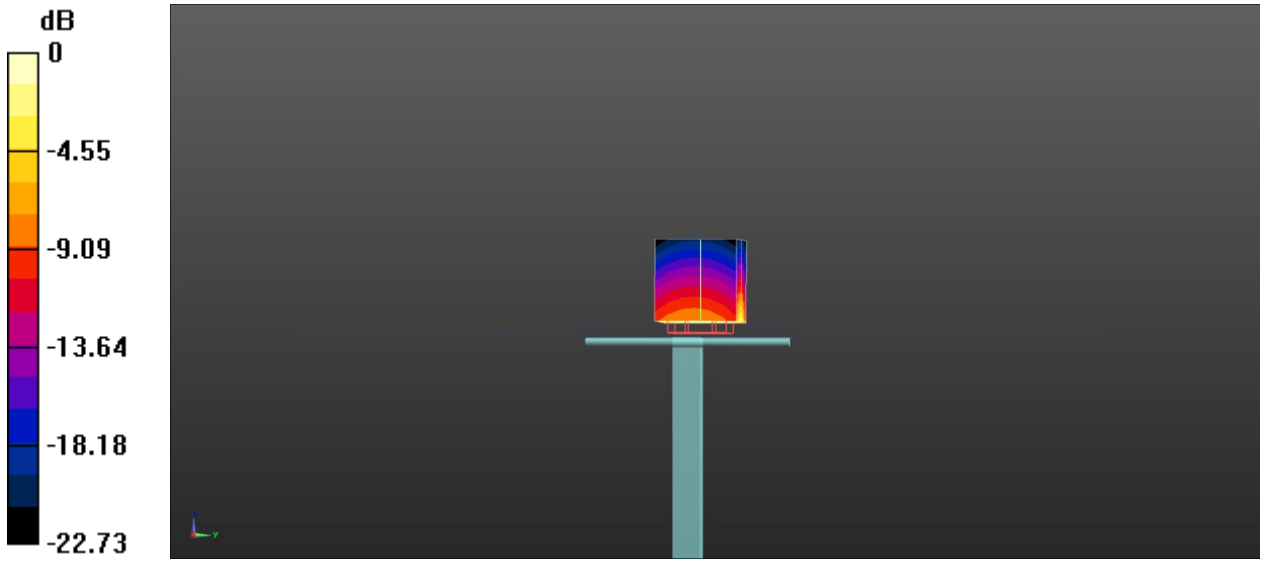

0 dB = 5.92 W/kg = 7.72 dBW/kg

4.7 D2600V2

4.7.1 Dipole 2600 MHz Validation Measurement for Head Tissue

Dipole 2600 MHz; Type: D2600V2; Serial: D2600V2-SN: 1095
Date/Time: 7/5/2018
Communication System Band: D2600 (2600.0 MHz); Frequency: 2600 MHz;Duty Cycle: 1:1
Medium parameters used: f = 2600 MHz; σ = 1.99 S/m; εr = 39.03; ρ = 1000 kg/m3
Phantom section: Flat Section
Ambient Temperature:22.3 Liquid Temperature:21.1
DASY5 Configuration:

- Probe: ES3DV3 - SN3110; ConvF(4.25, 4.25, 4.25);
- Sensor-Surface: 4mm (Mechanical Surface Detection)
- Electronics: DAE4 Sn685;
- Phantom: SAM (30deg probe tilt) with CRP v5.0 Right 1857; Type: QD000P40CD; Serial: TP1857
- Measurement SW: DASY52, Version 52.8 (8); SEMCAD X Version 14.6.10 (7331)

Dipole validation measurement for Head Tissue/Pin= 100mW ,d=10mm /Zoom Scan (7x7x7)/Cube 0: Measurement grid: dx=5mm, dy=5mm, dz=5mm
Reference Value = 32.49 V/m; Power Drift = 0.00 dB
Peak SAR (extrapolated) = 11.17 W/kg
SAR(1 g) = 5.84 W/kg; SAR(10 g) = 2.49 W/kg
Maximum value of SAR (measured) = 6.38 W/kg

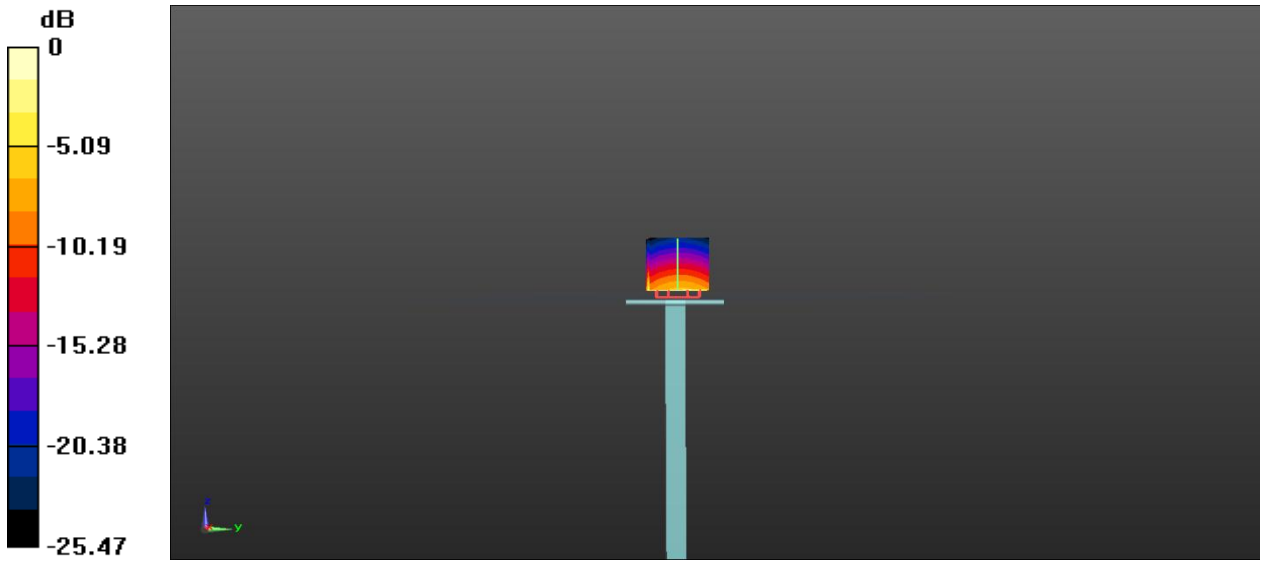

0 dB = 6.38 W/kg = 8.05 dBW/kg

4.7.2 Dipole 2600 MHz Validation Measurement for Body Tissue

Dipole 2600 MHz; Type: D2600V2; Serial: D835V2-SN: 1095
Date/Time: 7/5/2018
Communication System Band: D2600 (2600.0 MHz); Frequency: 2600 MHz;Duty Cycle: 1:1
Medium parameters used: f = 2600 MHz; σ = 2.21 S/m; εr = 50.89; ρ = 1000 kg/m3
Phantom section: Flat Section
Ambient Temperature:22.3 Liquid Temperature:21.1
DASY5 Configuration:

- Probe: ES3DV3 - SN3110; ConvF(4.12, 4.12, 4.12);
- Sensor-Surface: 4mm (Mechanical Surface Detection)
- Electronics: DAE4 Sn685;
- Phantom: SAM (30deg probe tilt) with CRP v5.0 Right 1857; Type: QD000P40CD; Serial: TP1857
- Measurement SW: DASY52, Version 52.8 (8); SEMCAD X Version 14.6.10 (7331)

Dipole validation measurement for Body Tissue/Pin= 100mW ,d=10mm /Zoom Scan (7x7x7)/Cube 0: Measurement grid: dx=5mm, dy=5mm, dz=5mm
Reference Value = 37.27 V/m; Power Drift = 0.12 dB
Peak SAR (extrapolated) = 12.5 W/kg
SAR(1 g) = 5.83 W/kg; SAR(10 g) = 2.51 W/kg
Maximum value of SAR (measured) = 6.67 W/kg

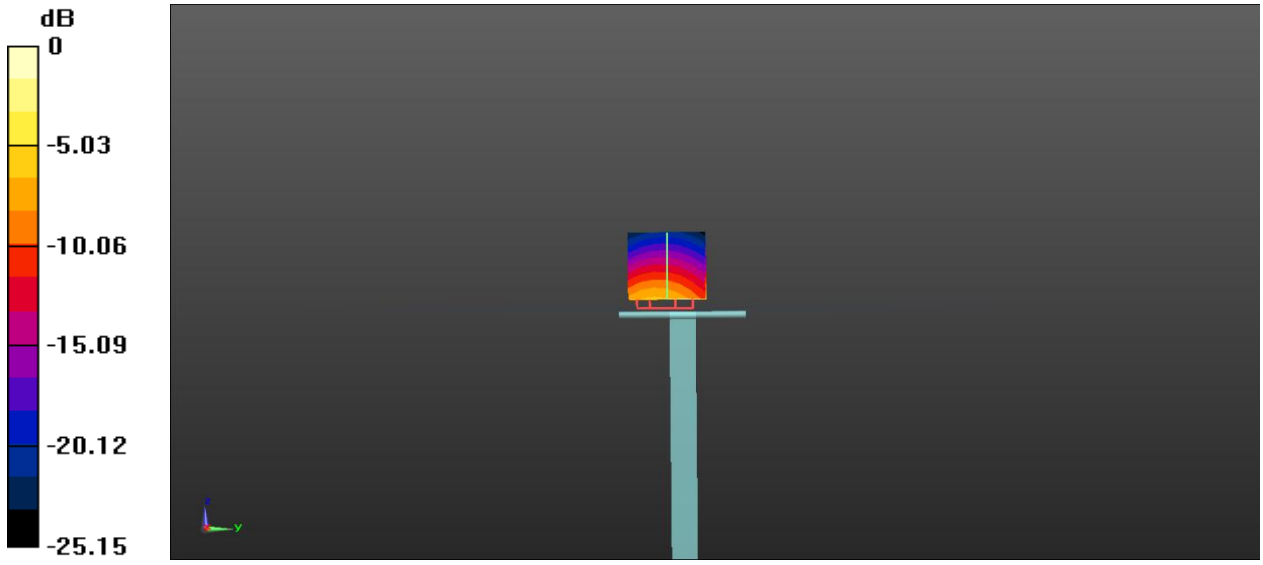

0 dB = 6.67 W/kg = 8.24 dBW/kg

4.8 D5GHzV2

4.8.1 Dipole 5 GHz Validation Measurement for Head Tissue

Dipole 5GHz; Type: D5GHzV2; Serial: D5GHzV2-SN:1200
Date/Time: 6/25/2018
Communication System Band: D5GHz (5000.0 - 6000.0 MHz);
Frequency: 5250 MHz,
Frequency: 5600 MHz,
Frequency: 5750 MHz;
Duty Cycle: 1:1
Medium parameters used: f = 5250 MHz; σ = 4.63 S/m; ε_r = 36.06; ρ = 1000 kg/m^3 , Medium parameters used: f = 5600 MHz; σ = 5.07 S/m; ε_r = 35.83; ρ = 1000 kg/m^3 , Medium parameters used: f = 5750 MHz; σ = 5.17 S/m; ε_r = 35.41; ρ = 1000 kg/m^3
Phantom section: Flat Section
Ambient Temperature:22.3 Liquid Temperature:21.2
DASY5 Configuration:

- Probe: EX3DV4 - SN7340; ConvF(5.65, 5.65, 5.65); ConvF(4.87, 4.87, 4.87); ConvF(4.95, 4.95, 4.95);
- Sensor-Surface: 1.4mm (Mechanical Surface Detection)
- Electronics: DAE4 Sn1454;
- Phantom: SAM (30deg probe tilt) with CRP v5.0 on left 1859; Type: QD000P40CD; Serial: TP:1859
- Measurement SW: DASY52, Version 52.8 (8); SEMCAD X Version 14.6.10 (7331)

Dipole validation measurement for Head Tissue/Pin= 100mW ,dist=10mm,f=5250 MHz /Zoom Scan (7x7x21)/Cube 0: Measurement grid: dx=4mm, dy=4mm, dz=1.4mm
Reference Value = 37.41 V/m; Power Drift = 0.01 dB
Peak SAR (extrapolated) = 33.6 W/kg
SAR(1 g) = 7.98 W/kg; SAR(10 g) = 2.13 W/kg
Maximum value of SAR (measured) = 19.79 W/kg

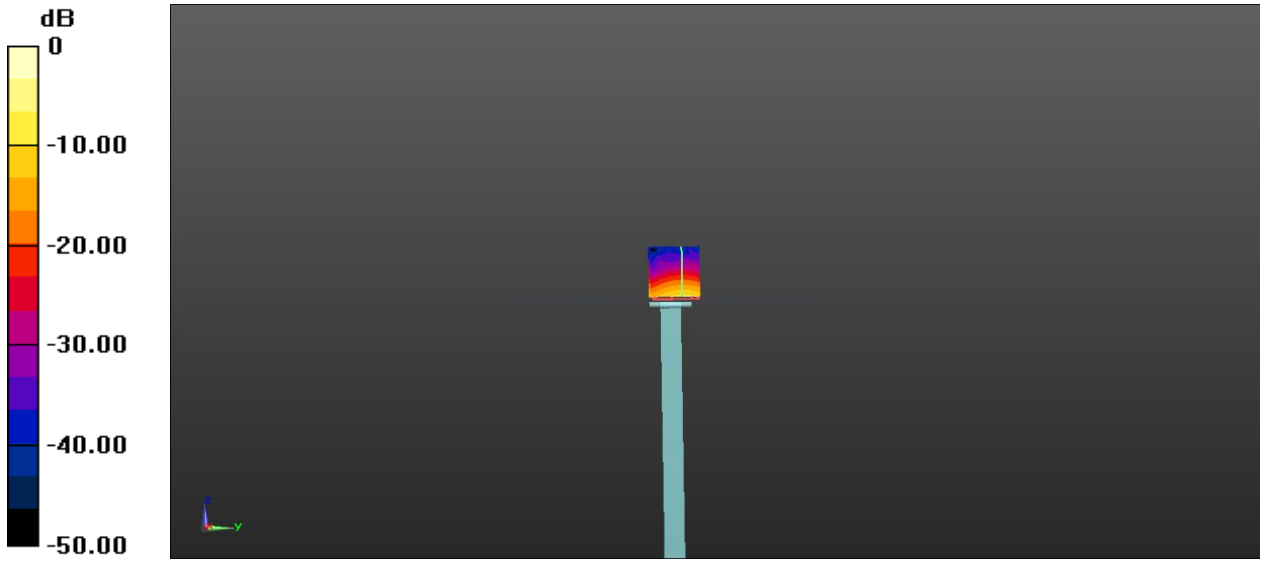

0 dB = 19.79 W/kg = 12.96 dBW/kg

Dipole validation measurement for Head Tissue/Pin= 100mW ,dist=10mm,f=5600 MHz /Zoom Scan (7x7x21)/Cube 0: Measurement grid: dx=4mm, dy=4mm, dz=1.4mm
Reference Value = 28.37 V/m; Power Drift = 0.12 dB
Peak SAR (extrapolated) = 37.5 W/kg
SAR(1 g) = 8.27 W/kg; SAR(10 g) = 2.22 W/kg
Maximum value of SAR (measured) = 20.51 W/kg

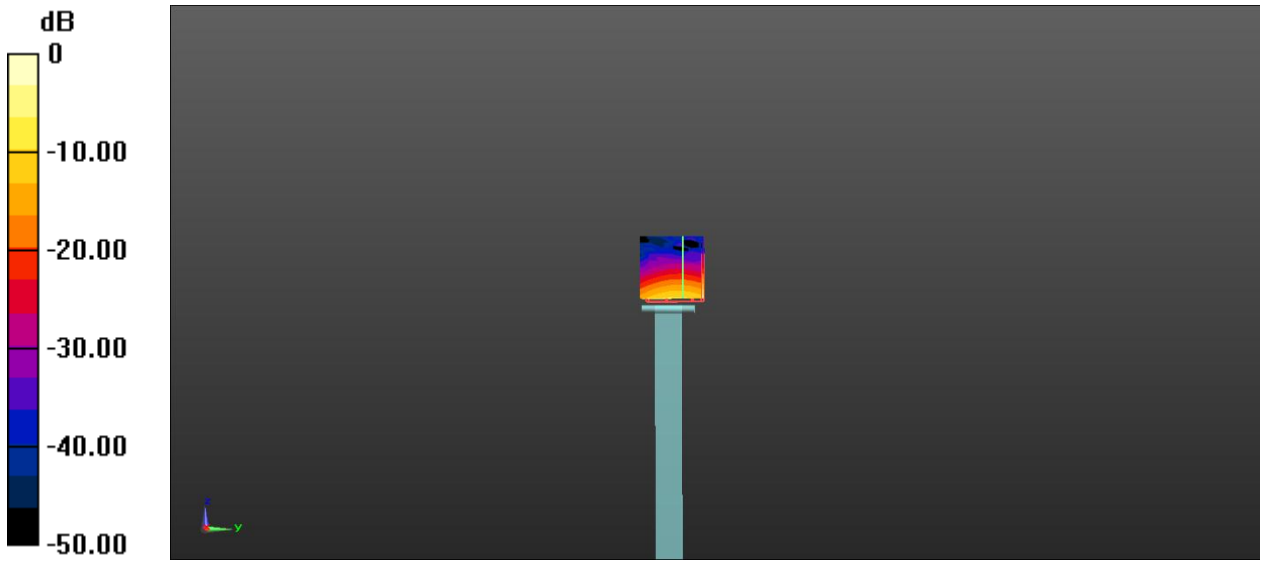

0 dB = 20.51 W/kg = 13.12 dBW/kg

Dipole Calibration for Head Tissue/Pin= 100mW ,dist=10mm,f=5750 MHz /Zoom Scan (7x7x21)/Cube 0: Measurement grid: dx=4mm, dy=4mm, dz=1.4mm
Reference Value = 33.52 V/m; Power Drift = 0.04 dB
Peak SAR (extrapolated) = 40.42 W/kg
SAR(1 g) = 8.03 W/kg; SAR(10 g) = 2.14 W/kg
Maximum value of SAR (measured) = 17.29 W/kg

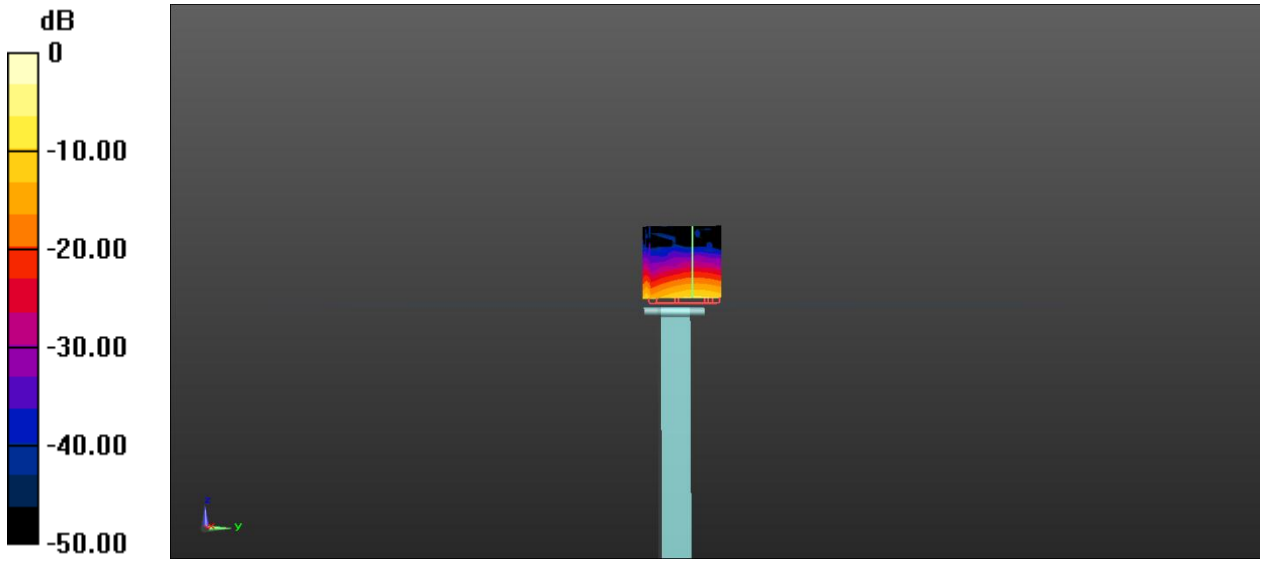

0 dB = 17.29 W/kg = 12.38 dBW/kg

4.8.2 Dipole 5 GHz Validation Measurement for Body Tissue

Dipole 5GHz; Type: D5GHzV2; Serial: D5GHzV2-SN:1200
Date/Time: 6/25/2018
Communication System Band: D5GHz (5000.0 - 6000.0 MHz); Frequency: 5250 MHz; Frequency: 5600 MHz; Frequency: 5750 MHz; Duty Cycle: 1:1
Medium parameters used: f = 5250 MHz; σ = 5.34 S/m; ε_r = 47.48; ρ = 1000 kg/m^3 , Medium parameters used: f = 5600 MHz; σ = 5.65 S/m; ε_r = 46.63; ρ = 1000 kg/m^3, Medium parameters used: f = 5750 MHz; σ = 5.87 S/m; ε_r = 46.28; ρ = 1000 kg/m^3
Phantom section: Flat Section
Ambient Temperature:22.3 Liquid Temperature:21.2
DASY5 Configuration:

- Probe: EX3DV4 - SN7340; ConvF(5.16, 5.16, 5.16);ConvF(4.35, 4.35, 4.35); ConvF(4.58, 4.58, 4.58);
- Sensor-Surface: 1.4mm (Mechanical Surface Detection)
- Electronics: DAE4 Sn1454;
- Phantom: SAM (30deg probe tilt) with CRP v5.0 on left 1859; Type: QD000P40CD; Serial: TP:1859
- Measurement SW: DASY52, Version 52.8 (8); SEMCAD X Version 14.6.10 (7331)

Dipolevalidation measurement for Body Tissue/Pin= 100mW ,dist=10mm,f=5250 MHz /Zoom Scan (7x7x21)/Cube 0: Measurement grid: dx=4mm, dy=4mm, dz=1.4mm
Reference Value = 36.65 V/m; Power Drift = 0.03 dB
Peak SAR (extrapolated) = 27.1 W/kg
SAR(1 g) = 7.32 W/kg; SAR(10 g) = 2.05 W/kg
Maximum value of SAR (measured) = 14.41 W/kg

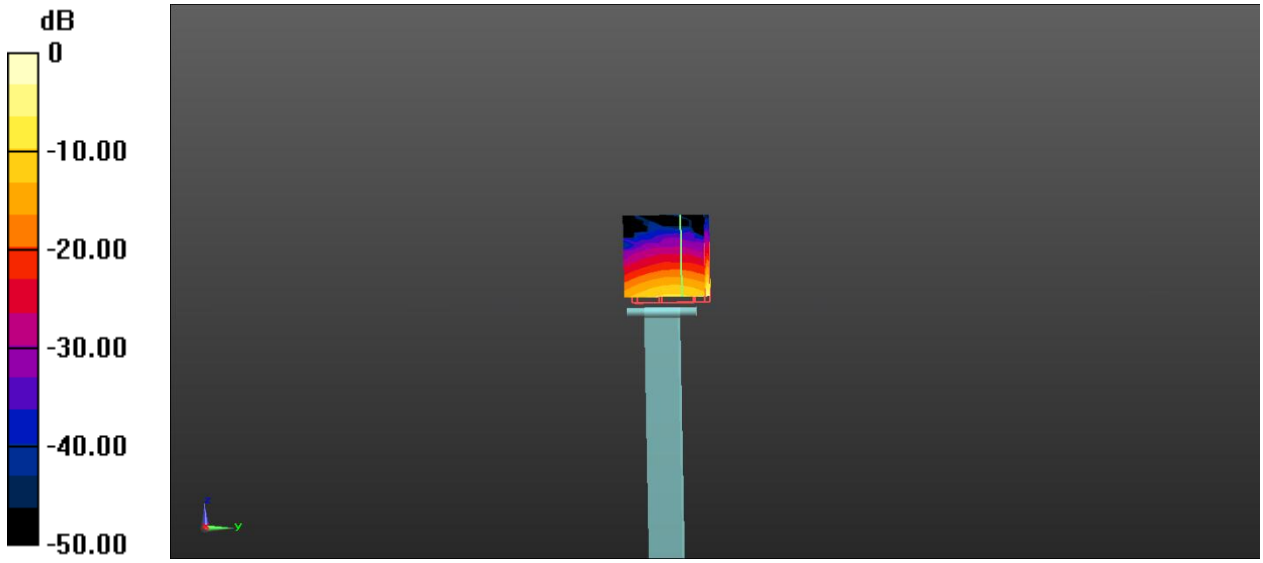

0 dB = 14.41 W/kg = 11.59 dBW/kg

Dipolevalidation measurement for Body Tissue/Pin= 100mW , dist=10mm,f=5600 MHz /Zoom Scan (7x7x21)/Cube 0:
Measurement grid: dx=4mm, dy=4mm, dz=1.4mm
Reference Value = 40.17 V/m; Power Drift = 0.09 dB
Peak SAR (extrapolated) = 35.4 W/kg
SAR(1 g) = 8.27 W/kg; SAR(10 g) = 2.31 W/kg
Maximum value of SAR (measured) = 20.28 W/kg

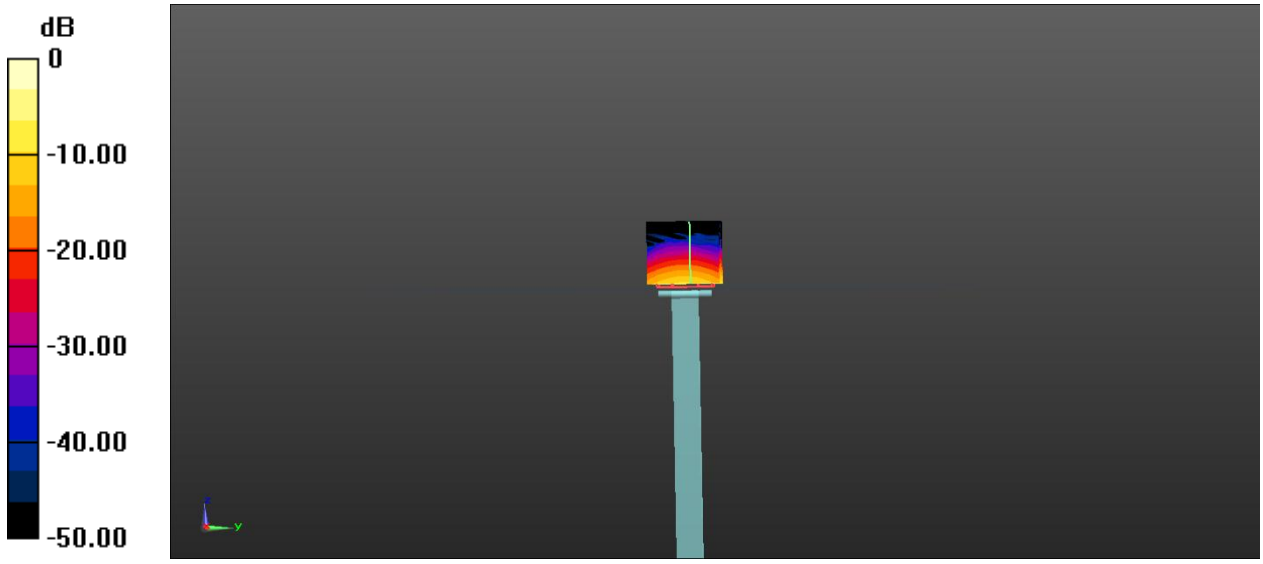

0 dB = 20.28 W/kg = 13.07 dBW/kg

Dipolevalidation measurement for Body Tissue/Pin= 100mW ,dist=10mm,f=5750 MHz /Zoom Scan (7x7x21)/Cube 0: Measurement grid: dx=4mm, dy=4mm, dz=1.4mm
Reference Value = 36.43 V/m; Power Drift = 0.13 dB
Peak SAR (extrapolated) = 35.6 W/kg
SAR(1 g) = 7.73 W/kg; SAR(10 g) = 2.12 W/kg
Maximum value of SAR (measured) = 19.33 W/kg

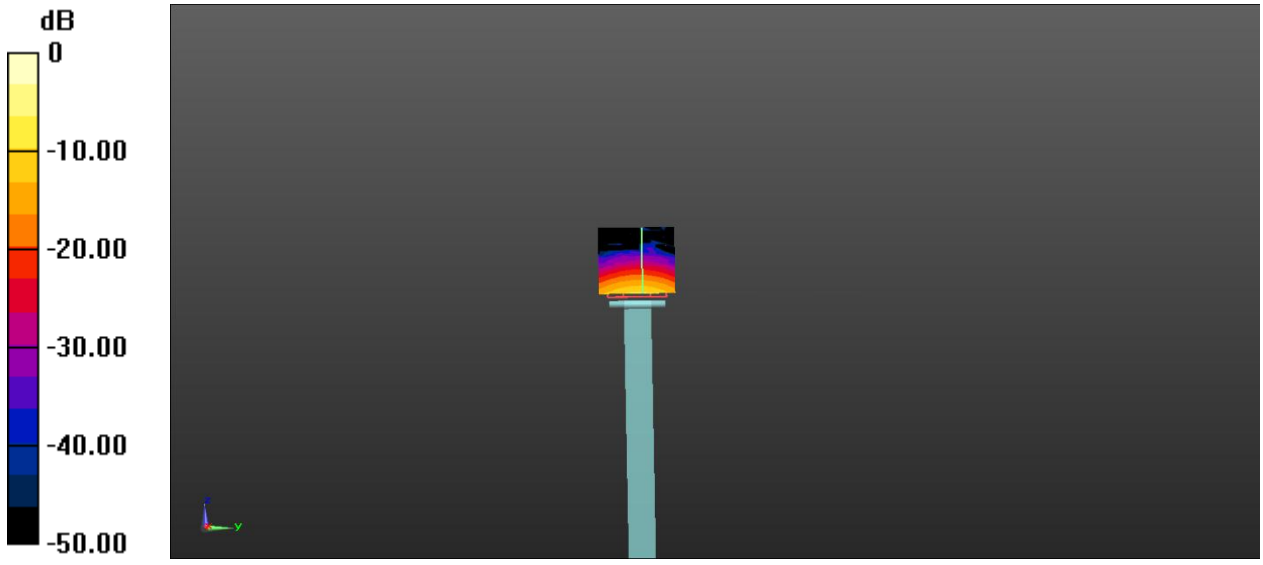

0 dB = 19.33 W/kg = 12.86 dBW/kg

--END OF REPORT--