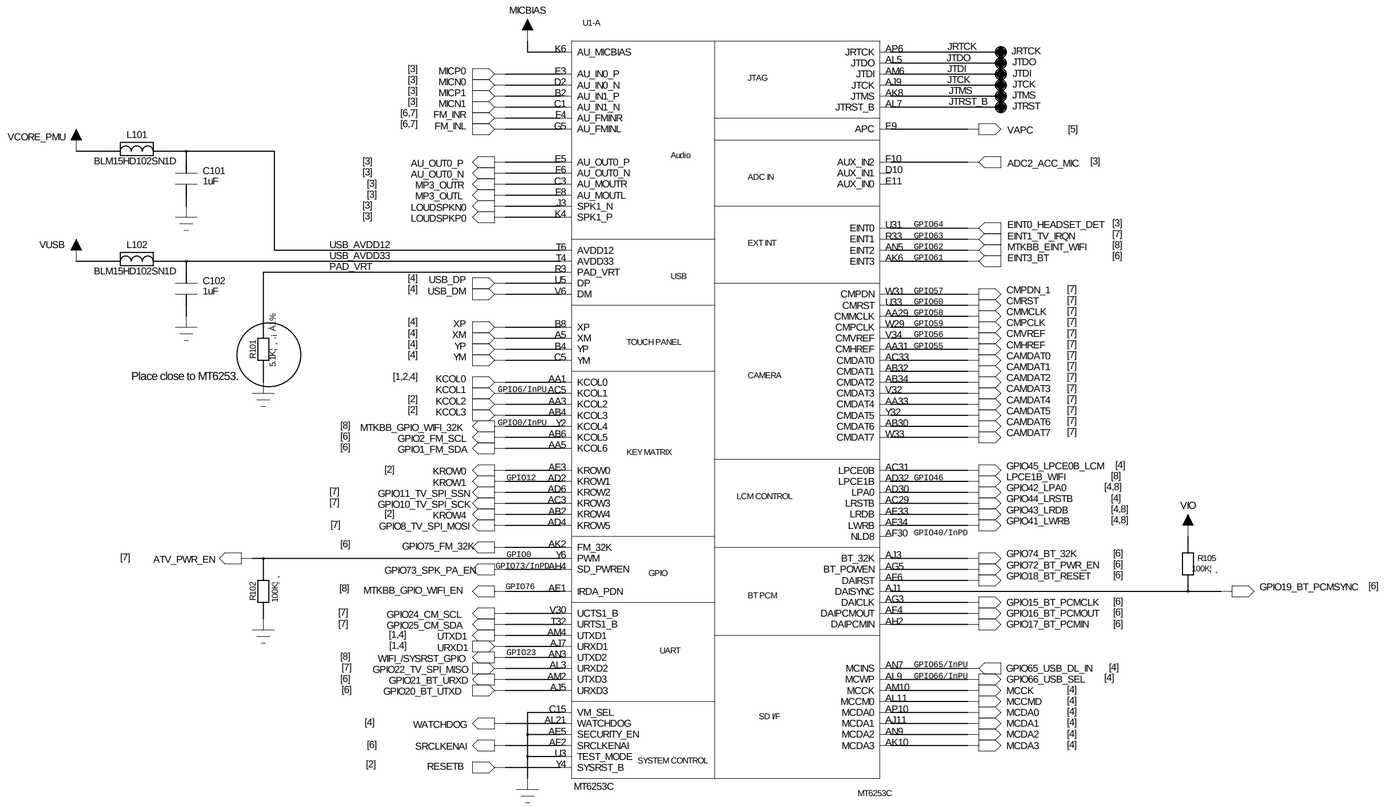

I2S Application Note:

I2S_WS	Pin. AE1/IRDA_PDN
I2S_DATA	Pin AN3UTXD2
I2S_CLK	Pin AF30/NLD8

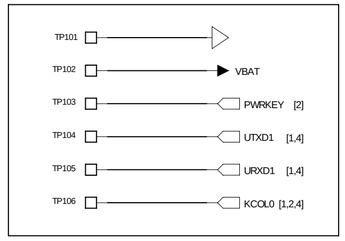

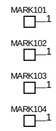

BASEBAND

				DRAWN	Victor	DATE	July 5th,2011	MODEL:	M905E	MT6253C	
				CHECKED		TIME		TITLE:	MT6253C baseband	VERSION	V1.0

PMU

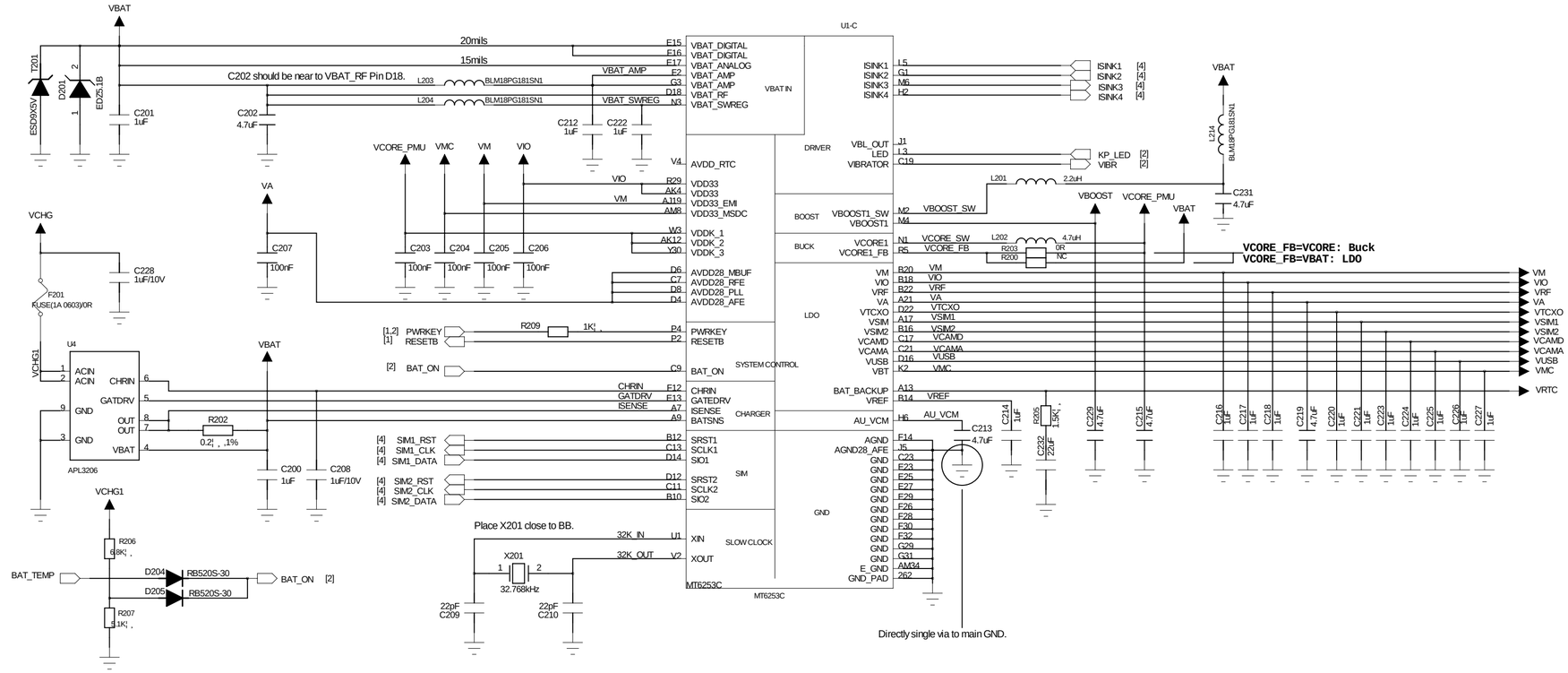

VIB

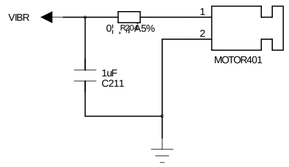

Battery

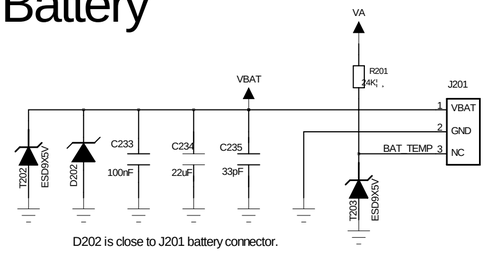

D202 is close to J201 battery connector.

KEY

Side KEY

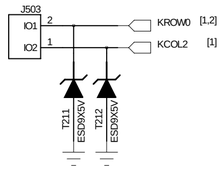

POWER KEY

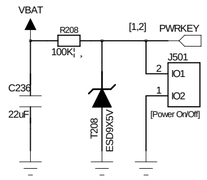

KEY FPC

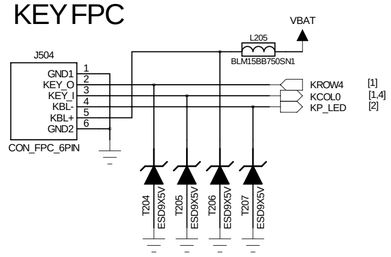

	Symbol	Vout (V)	Iout (mA)	Setting
Buck	VCORE	1.2	200	
RF LDO	VRF	2.8	180	
	VTCXO	2.8	20	
Analog LDO	VA	2.8	100	
	VCAM_A	1.5/1.8/2.5/2.8	150	
	VM	1.8/2.8	200	VM_SEL
	VIO	2.8	100	
Digital LDO	VSIM	1.8/3.0	80	
	VUSB	3.3	75	
	VBT	1.3/1.8/2.5/3.0	150	
	VCAM_D	1.3/1.5/1.8/2.8	75	
	VSIM2	1.3/1.5/1.8/2.8	20	
Vibrator	VIBR	1.8/3.0	100	
RTC	VBACKUP	2.8	1	
Boost Converter	VBOOST1	3.4~5.5	100	

				DRAWN		DATE		MODEL:		
				CHECKED		TIME		TITLE:		VERSION

MIC

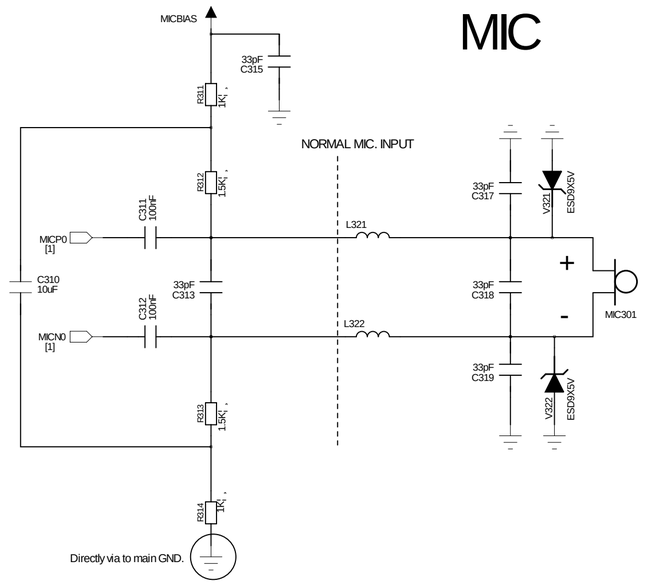

3.5mm Phone Jack

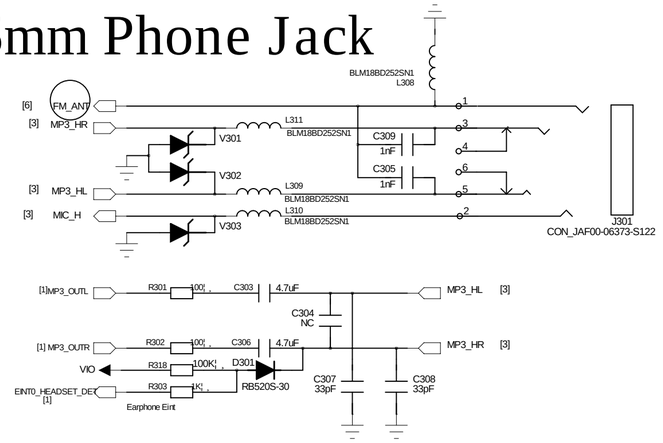

REC

Receiver

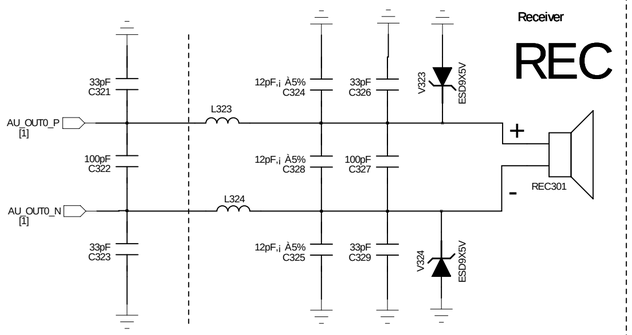

EAR_MIC

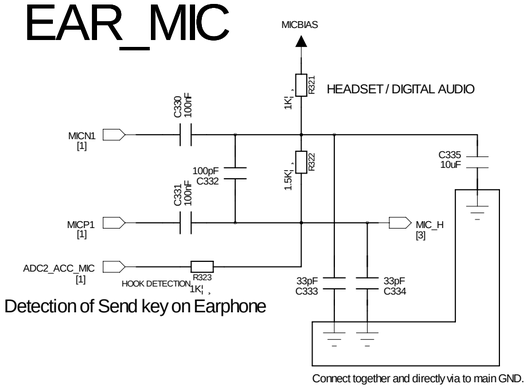

SPK1

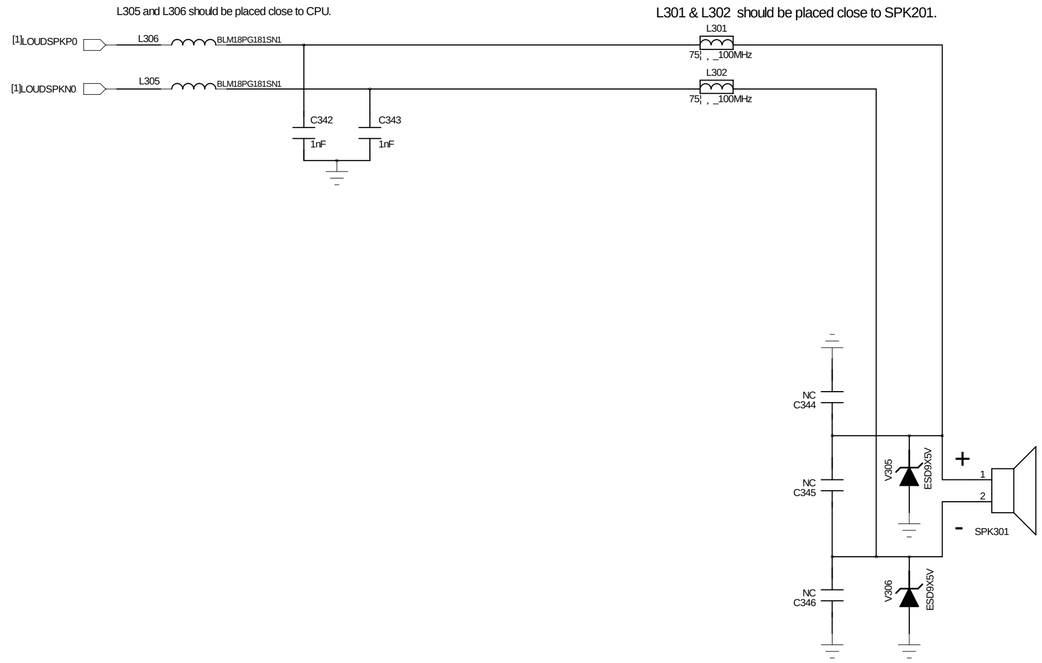

				DRAWN		DATE		MODEL:		
				CHECKED		TIME		TITLE:	VERSION	

BASEBAND-MCP INTERFACE

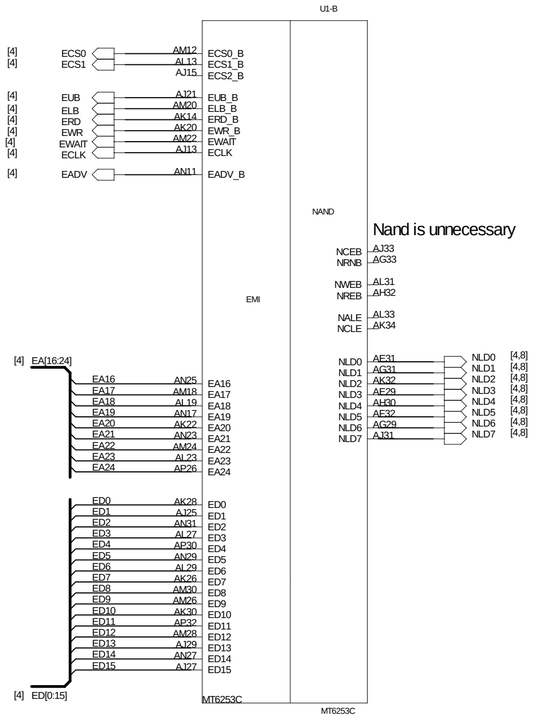

ADMUX MEMORY

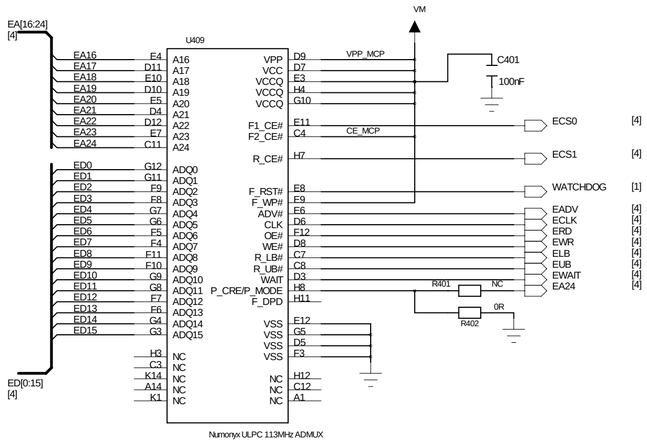

Memory¦ @ layout

LCM

8-bit LCD Interface

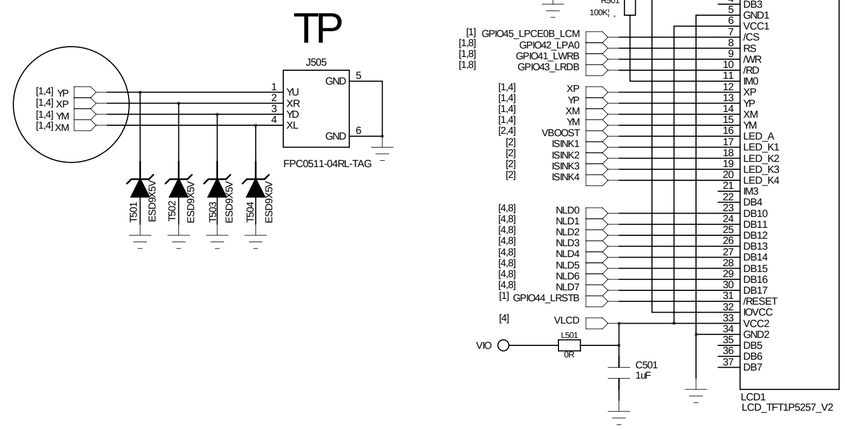

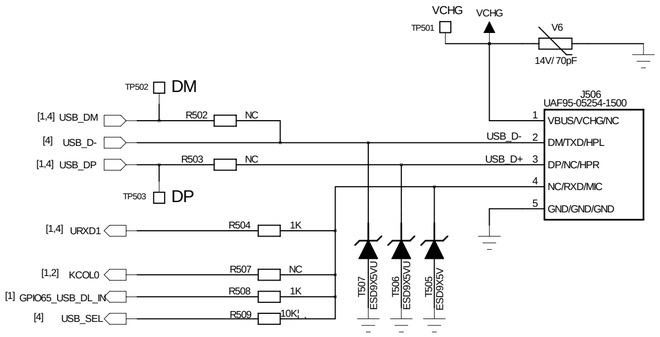

Micro USB 5pin Socket

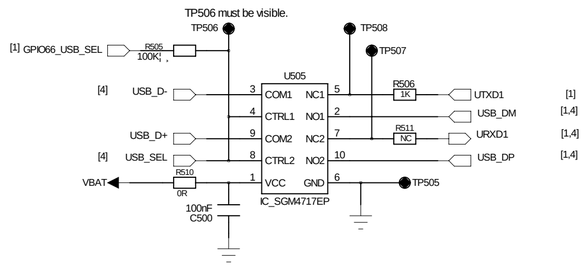

Card Board Interface

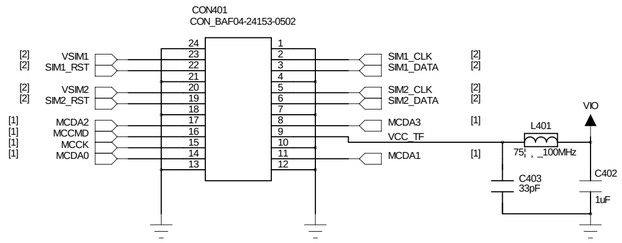

				DRAWN		DATE		MODEL:		
				CHECKED		TIME		TITLE:	VERSION	

ANT601 ANT-GND
ANT602 ANT-GSM
ANT603 ANT-GND
L601 NC
2008-12-03
R600 0R ,1 A5%
C601 NC
J601 CON_MM8430-2610RB3
GND GND GND GND IN OUT
[5] PAEN
R602 1K ,1
22pF C602
[5] BANDSW_DCS
R601 1K ,1
22pF C603
[2,5] VRF
R603 0R ,1 A5%
27pF C604
VBAT
6.8pF C606
33pF C607
100nF C608
22uF C609
R605 10K ,1
VAPC [1]
220pF C605
R604 33K ,1
Suggest to connect to
VccRF(2.8V) to get better
HB Low PCL isolation
L602 3.3nH
C633 27pF
0.5pF C615
NC C660
L600 27nH
U601
SKY77542
RSVD RSVD RSVD VLOGIC BS TX_EN VBATT VRAMP
ANT GND GND GND GND GND DCS_RX GSM_RX
GND GND GND GND GND GND GND GND GND
DCS_IN EGSM_IN
C657 0R ,1
C656 NC
L657 NC
PAIN_HB [5]
C658 0R ,1
C659 NC
L658 NC
PAIN_LB [5]
C617 3.3nH
NC C620
Z601
GND GND
IN
850P 850N 900P 900N
SAWEN881MCY0F00R14
C610 2.7pF
L617 NC
L610 18nH
GSM850P [5]
C611 2.7pF
GSM850N [5]
C619 2.2pF
L608 NC
L611 15nH
GSM900P [5]
C655 2.2pF
GSM900N [5]
3.3nH C621
NC C630
Z602
1800N 1800P 1900N 1900P
SAWEN1G84CW0F00R14
C623 3.3pF
L609 NC
L616 4.7nH
DCS1800N [5]
C624 3.3pF
DCS1800P [5]
C625 2.7pF
L614 NC
L615 4.7nH
PCS1900N [5]
C626 2.7pF
PCS1900P [5]
VTCXO
R609 0R ,1 A5%
C613 1uF
VIO
R606 NC
R608 51R
C612 100nF
VA
R607 0R ,1 A5%
C614 1uF
XTAL601 26MHz
Directly via to main GND.
[5,7] BT_SCLK_53
U1-D
VDD28_OPLL VDD28_TXVCO VDD28_TRXIF VDD28_RXFE VDD28_RFVCO VDD28_SX VDD28_DCXO
VDD15_RFD VDD28_RFD
XTAL1 XTAL2_GND FREF
IN IP QP QN
BPI_BUS0 BPI_BUS1 BPI_BUS2 BPI_BUS3 BPI_BUS4 BPI_BUS5
BANDSW_DCS [5] VC2 VC1 PAEN [5]
TXO_HB TXO_LB
PAIN_HB [5] PAIN_LB [5]
PCS1900P PCS1900N DCS1800P DCS1800N GSM900P GSM900N GSM850P GSM850N
[5] [5] [5] [5] [5] [5] [5] [5]
RFVCO_MT
GND_RXISO GND_RFVCO GND_SX
MT6253C
L603 BLM15BB750SN1
5.6pF C600
C638 1uF
C600 close to VDD28_OPLL, L603 close to VDD28_OPLL.
C638 close to VDD28_RFVCO.
C720 1nF
[5,7] BT_SCLK_53
BT_SCLK [6]
NC C721
Outside of shielding case

GSM_RF

				DRAWN		DATE		MODEL:			
				CHECKED		TIME		TITLE:		VERSION	

FM_RDA5802E

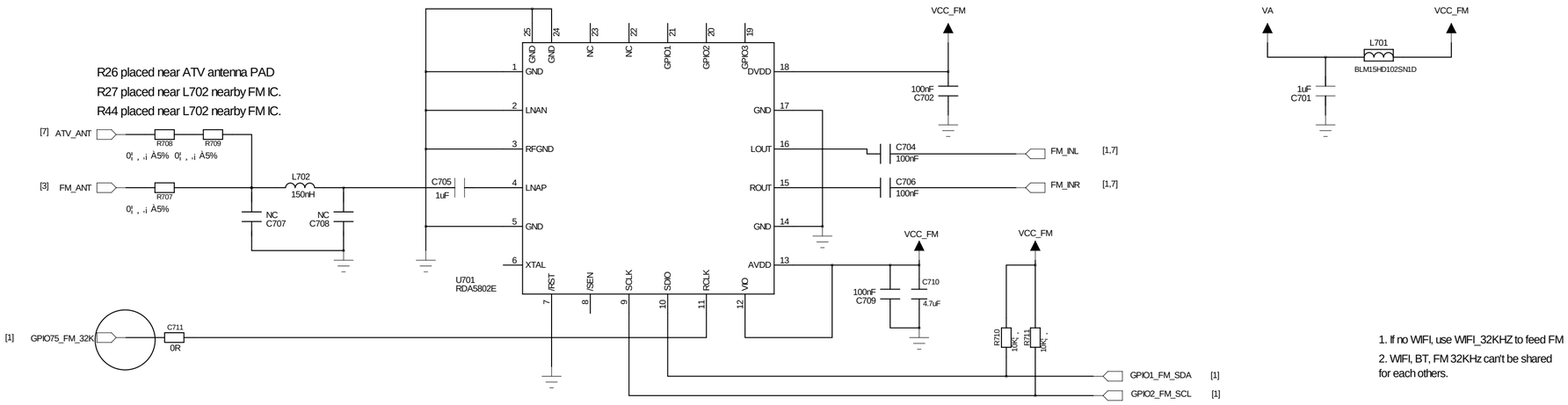

1. If no WIFI, use WIFI_32KHZ to feed FM
2. WIFI, BT, FM 32KHz can't be shared for each others.

BLUETOOTH_MT6612

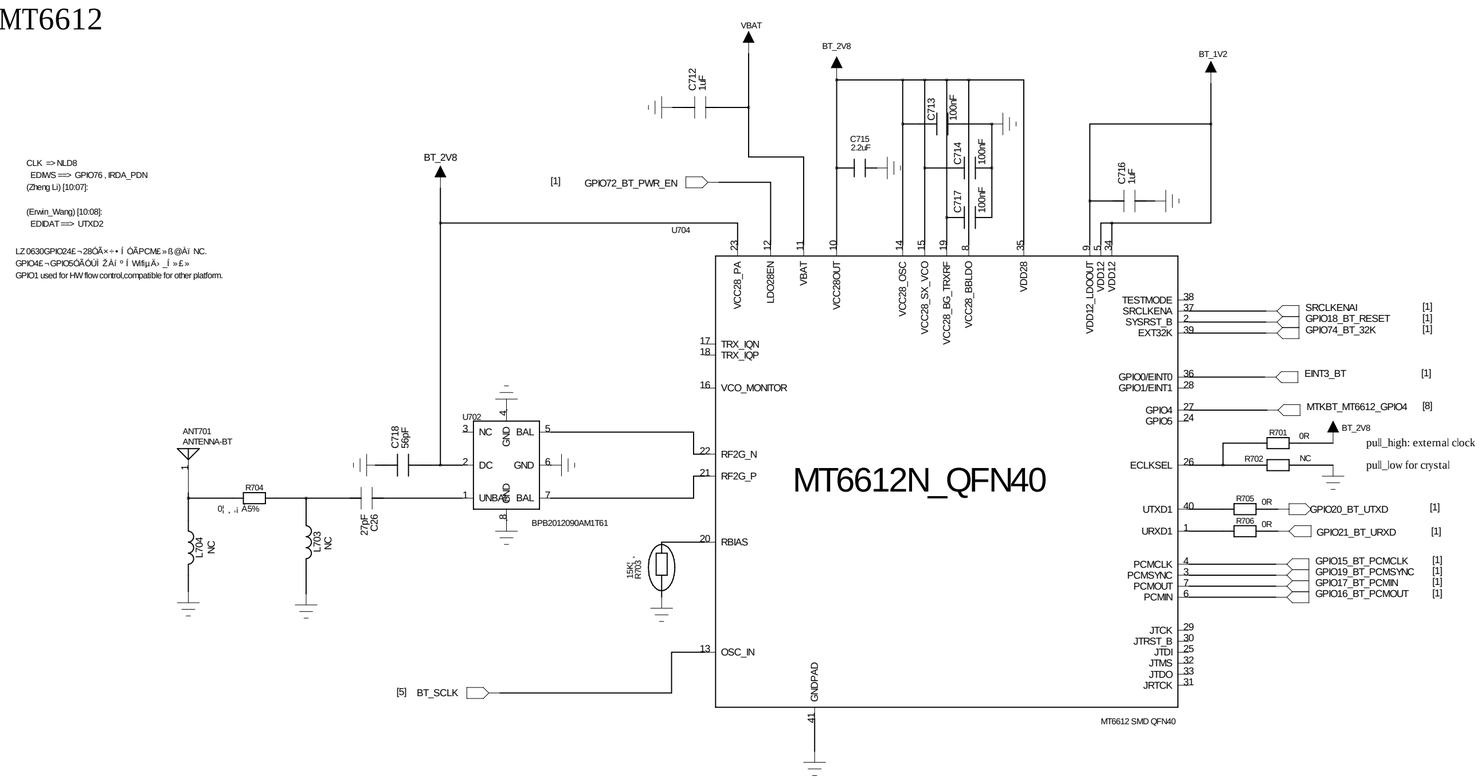

				DRAWN		DATE		MODEL:		
				CHECKED		TIME		TITLE:		VERSION

ATV_NMI601B/ATV168H
ATV + ISDB-T_NMI5625

Place C872 next to pin 42 and 43.
Place C873 next to pin 3 and 48.

Place C874 next to pin 46.
Place C875 next to pin 40.
Place C876 next to pin 20 and 25.

Place C877 next to pin 19.
Place C878 next to pin 33.

VCAMA
R861 0R
C861 4.7uF
VDD_NMI [7]

VCAM_IOVDD
R887 NC
VIO_NMI [7]

For NM601B: C864=1000pF, C865=1.5pF

ANT801 ANT-TV
ATV_ANT [6]
R860 0R
TB61 ESD9X5VU
TB62 ESD9X5VU
NC C862
NC C863
GND

Antenna Matching Network and ESD Protection.
Place Exactly at Antenna Pad

22pF C864
NC C865
L861 9.1nH
C866 1.0pF
C867 27pF
L862 56nH
C868 1.8pF
8.2pF C869
5.6nF C870
L863 150nH
L864 150nH
27pF C871

Do Not Install For NM601B

TV_1P2V
B861 470R _100MHz
100nF C872
1uF C873
VDD_NMI
B862 470R _100MHz
VIO_NMI
100nF C874
C875 1uF
C876 100nF
TV_1P2V
100nF C877
100nF C878

VDD_ANLG 43
VDD_DIG 42
VDD_VCO 48
VDD_RF1 3
VDDA_IO 46
VDD_LDO 40
VDDIO1 20
VDDIO2 25
VDDC1 19
VDDC2 33
VREG_LDO 41
1uF C879

TP_P 1
TP_N 2
RF1_IN 4
RF2_IN 5
RF3_IN 6
XO_P 44
XO_N 45
GND 49

U3
IC-CPU-NMI600

R862 NC/10KR
R863 NC/10KR

I2S_SDA 36
I2C_SCL 35
R864 0R GPIO25_CM_SDA [1,7]
R865 0R GPIO24_CM_SCL [1,7]

GPIO_5 9
GPIO_4 10
GPIO_3 11
GPIO_2/PWM 17
GPIO_1/IRQN 12
GPIO_0 32
R866 0R IRQN
R867 0R SPI_SSN
R868 0R SPI_MOSI
R869 0R SPI_MISO
R870 0R SPI_SCK
EINT1_TV_IRQN [1]
GPIO11_TV_SPI_SSN [1]
GPIO8_TV_SPI_MOSI [1]
GPIO22_TV_SPI_MISO [1]
GPIO10_TV_SPI_SCK [1]
For NM5625/5325 SPI interface.
(Not used for NM601)

I2S_DATA 14
I2S_SCLK 34
I2S_MCLK 24
I2S_LRCK 13
ADAC_RIGHT [7]
ADAC_LEFT [7]

BT_VSYNC 16
BT_HSYNC 15
BT_CLK 26
R871 330R CMVREF [1,7]
R872 330R CMHREF [1,7]
R873 330R CMPCLK [1,7]

BT_D7 31
BT_D6 30
BT_D5 29
BT_D4 28
BT_D3 27
BT_D2 23
BT_D1 22
BT_D0 21
R874 330R CAMDAT7 [1,7]
R875 330R CAMDAT6 [1,7]
R876 330R CAMDAT5 [1,7]
R877 330R CAMDAT4 [1,7]
R878 330R CAMDAT3 [1,7]
R879 330R CAMDAT2 [1,7]
R880 330R CAMDAT1 [1,7]
R881 330R CAMDAT0 [1,7]

RN 38
RESETN 37
R884 0R CMRST [1,7]
CHIP_EN 7
EN_LDO 39
VIO_NMI
R885 0R ATV_PWR_EN [1]

IIC_ADR1 8
TEST_MODE 18
CLK_IN 47

C880 NC/6.8pF
Y881 NC/26MHZ,8pF
C881 NC/6.8pF
Values Shown are for crystal CL=8pF (Recommended)

BT_SCLK_53 [5]
R886 0R
TV_26M
C886 1nF
NC C887

Option to use external clock.

[7] ADAC_LEFT
R882 1K
C883 1uF
FM_INL [1,6]
22nF C882

[7] ADAC_RIGHT
R883 1K
C885 1uF
FM_INR [1,6]
22nF C884

Camera

VCAMA
VCAM_IOVDD
C802 100nF
C801 2.2uF
R801 0R
VCAMD
R802 NC
C804 1uF
C803 100nF
R803 330KR
R804 10KR
R805 10KR

AVDD	Analog core	2V8
DVDD	Digital core	1V8
DOVDD	I/O	1V8/2V8

CON800
1 AGND
2 SIO-D
3 AVDD
4 SIO-C
5 RESET
6 VSYNC
7 PWDN
8 HREF
9 DVDD
10 DOVDD
11 Y7
12 XCLK
13 Y6
14 Y5
15 PCLK
16 Y4
17 Y0
18 Y3
19 Y1
20 Y2
21 GND
CAMERA_M909

[1,7] GPIO25_CM_SDA
[1,7] GPIO24_CM_SCL
[1,7] CMRST
[1,7] CMVREF
[1] CMPDN_1
[1,7] CMHREF
VCAM_IOVDD
[1,7] CAMDAT7
[1] CMMCLK
[1,7] CAMDAT6
[1,7] CAMDAT5
[1,7] CMPCLK
[1,7] CAMDAT4
[1,7] CAMDAT0
[1,7] CAMDAT3
[1,7] CAMDAT1
[1,7] CAMDAT2

				DRAWN	Victor	DATE	July 5th,2011	MODEL:	M905E		
				CHECKED		TIME		TITLE:	Camera + ATV + ISDB-T	VERSION	V1.0

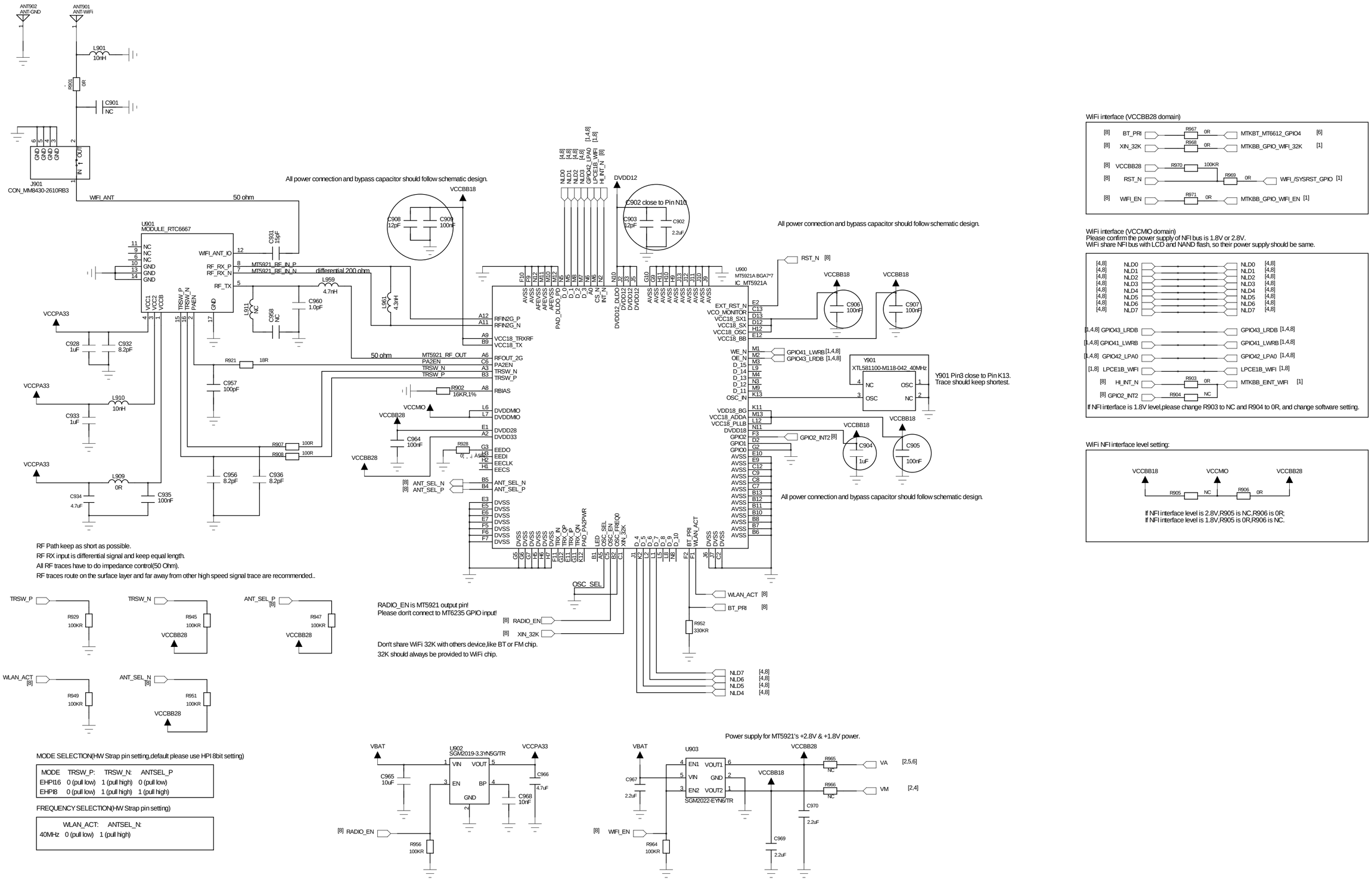

RF Path keep as short as possible.
RF RX input is differential signal and keep equal length.
All RF traces have to do impedance control(50 Ohm).
RF traces route on the surface layer and far away from other high speed signal trace are recommended..

RADIO_EN is MT5921 output pin!
Please don't connect to MT6235 GPIO input!

Don't share WiFi 32K with others device,like BT or FM chip.
32K should always be provided to WiFi chip.

MODE SELECTION(HW Strap pin setting,default please use HPI 8bit setting)

MODE	TRSW_P:	TRSW_N:	ANTSEL_P
EHPI16	0 (pull low)	1 (pull high)	0 (pull low)
EHPI8	0 (pull low)	1 (pull high)	1 (pull high)

FREQUENCY SELECTION(HW Strap pin setting)

	WLAN_ACT:	ANTSEL_N:
40MHz	0 (pull low)	1 (pull high)

Power supply for MT5921's +2.8V & +1.8V power.

WiFi interface (VCCBB28 domain)

WiFi interface (VCCMIO domain)
Please confirm the power supply of NFI bus is 1.8V or 2.8V.
WiFi share NFI bus with LCD and NAND flash, so their power supply should be same.

If NFI interface is 1.8V level,please change R903 to NC and R904 to 0R, and change software setting.

WiFi NFI interface level setting:

If NFI interface level is 2.8V,R905 is NC,R906 is 0R;
If NFI interface level is 1.8V,R905 is 0R,R906 is NC.

				DRAWN	Victor	DATE	July 5th,2011	MODEL:	M905E	MT5921A BGA7*7	
				CHECKED		TIME		TITLE:	WiFi	VERSION	V1.0