BASEBAND

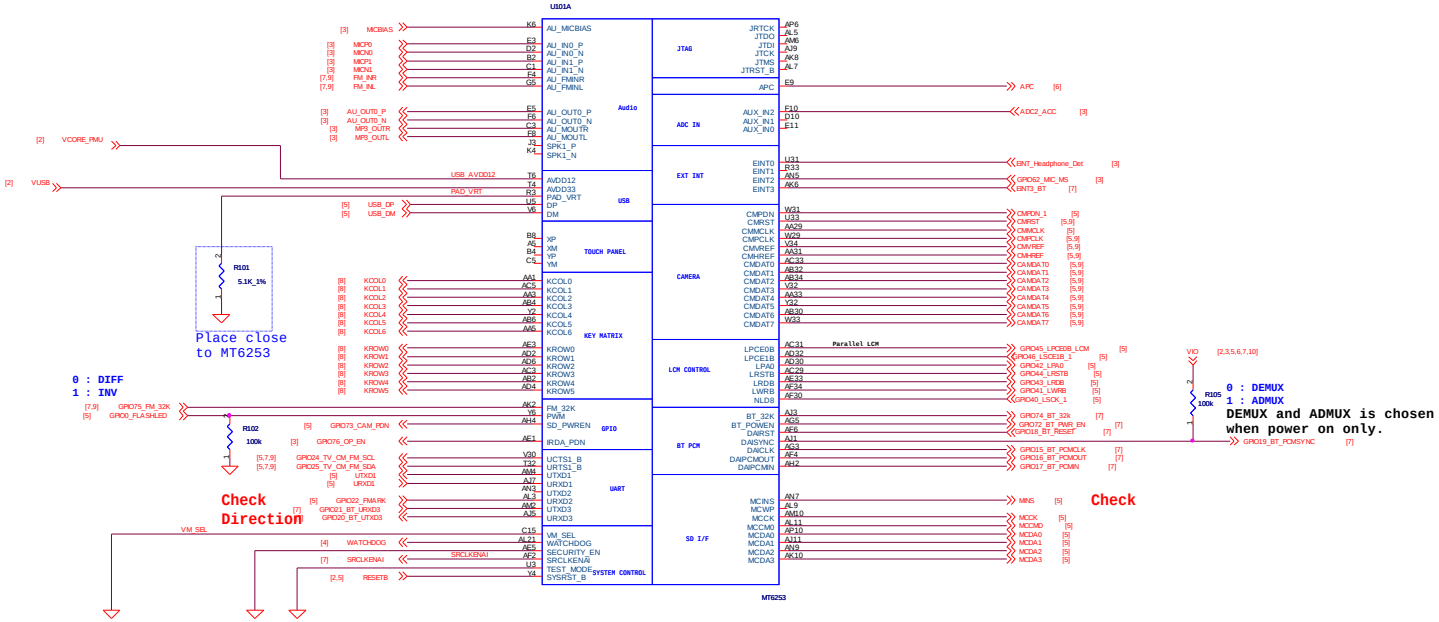

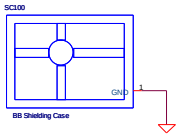

BASIC

I2S Application Note:

I2S_WS	Pin. AE1/IRDA_PDN
I2S_DATA	Pin AN3UTXD2
I2S_CLK	Pin AF30/NLD8

Title: 01 Baseband (MT6253)		
Size: A2	Document Number: I01	Rev: V0.1
Date: Thursday, January 13, 2011	Sheet 1 of 8	

BASEBAND-POWER

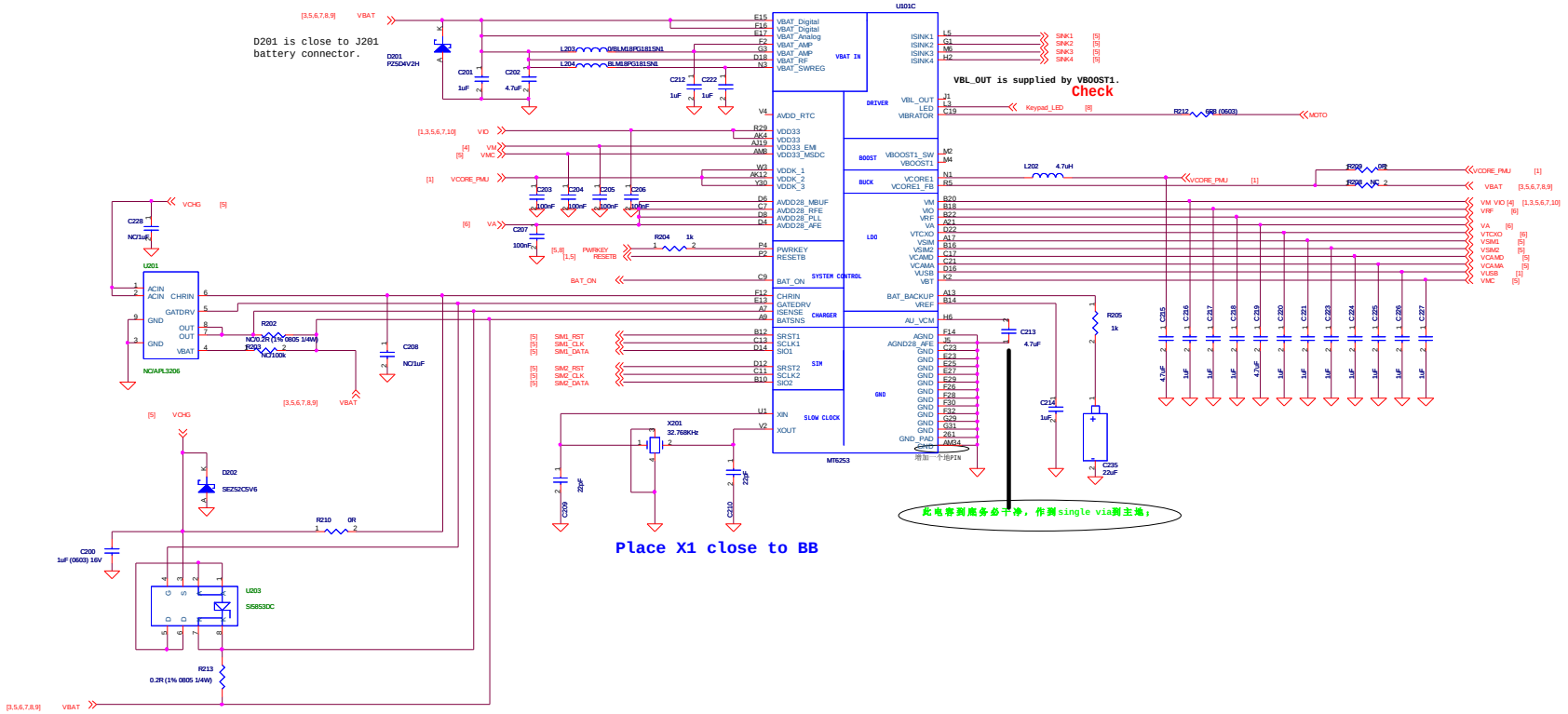

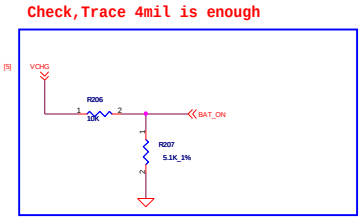

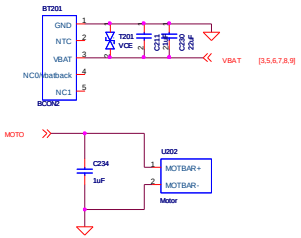

	Symbol	Vout (V)	Iout (mA)	Setting
Buck	VCORE	1.2	200	
RF LDO	VRF	2.8	200	
Analog LDO	VTCXO	2.8	20	
	VA	2.8	125	
	VCAM_A	1.5/1.8/2.5/2.8	150	
Digital LDO	VM	1.8/2.8	200	VM_SEL
	VIO	2.8	100	
	VSIM	1.8/3.0	100	
	VUSB	3.3	100	
	VBT	1.3/1.5/1.8/2.5/2.8/3.0/3.3	100	
	VCAM_D	1.3/1.5/1.8/2.5/2.8/3.0/3.3	100	
	VSIM2	1.3/1.5/1.8/2.5/2.8/3.0/3.3	100	
Vibrator	VIBR	1.8/3.0	200	
RTC	VBACKUP	2.8	2	
Boost Converter	VBOOST1	3.4~5.5	100	

Title	02 Power & PMIC (MT6253)		
Size A2	Document Number G01		Rev V0.1
Date: Tuesday, January 25, 2011	Sheet 2 of 8		

HANDSET MICOPHONE

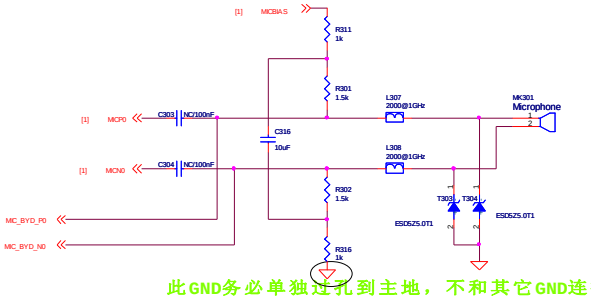

此GND务必单独过孔到主地，不和其它GND连接。

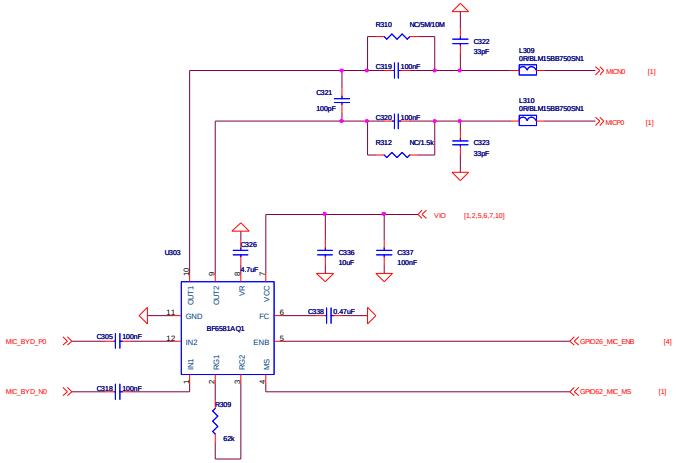

Earphone Receiver

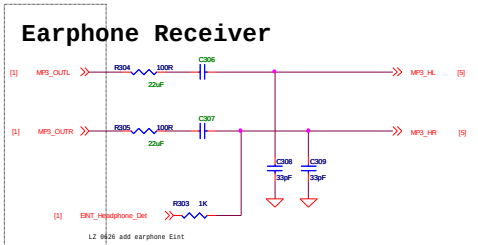

Earphone MICOPHONE

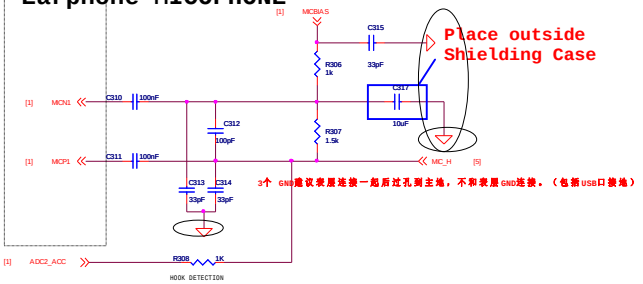

Detection of Send key on Earphone

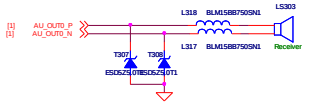

LoudSPK

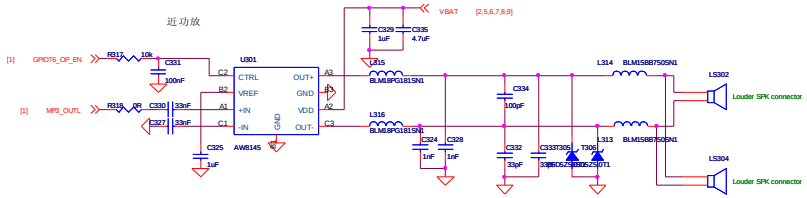

Title: 03 Audio		
Size: A2	Document Number: G01	Rev: V0.1
Date: Thursday, January 13, 2011	Sheet 3 of 8	

BASEBAND-MCP INTERFACE

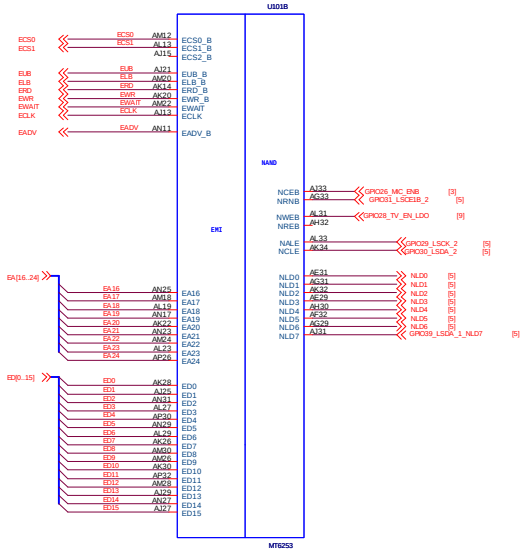

MCP

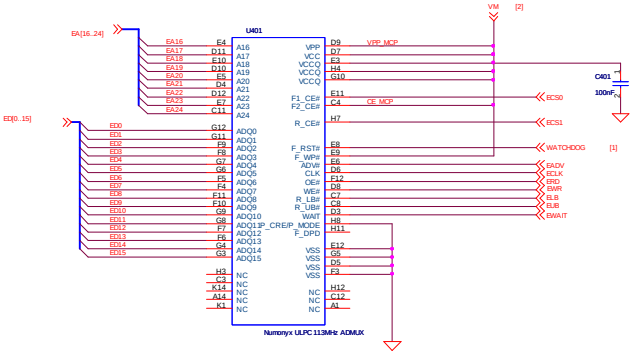

Title	04 Memory, T-Flash, Torch		
Size A2	Document Number G01		Rev V0.1
Date: Thursday, January 13, 2011	Sheet 4 of 8		

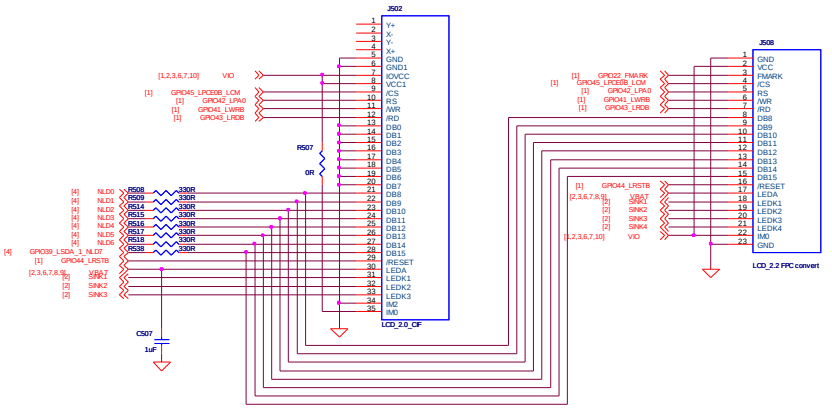

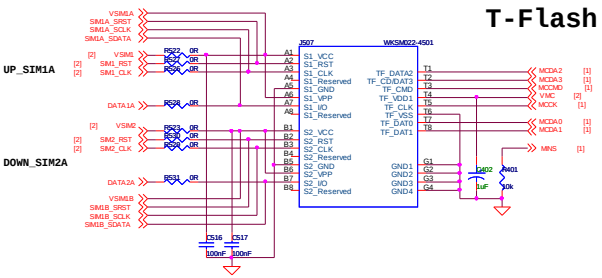

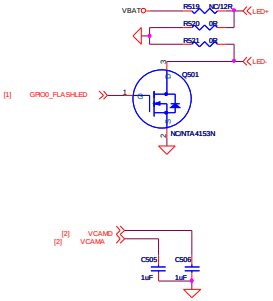

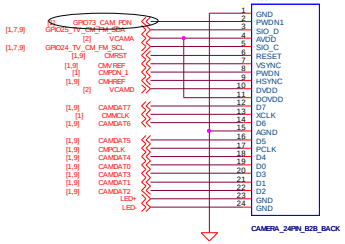

前后摄像头共用焊盘

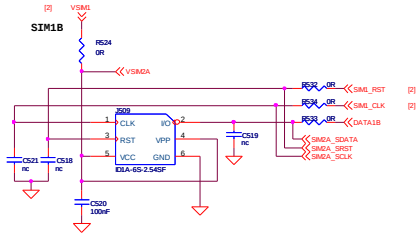

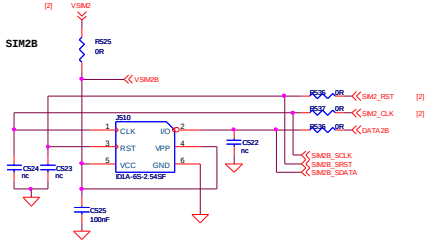

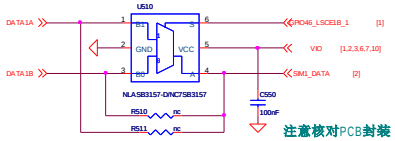

注意核对PCB封装

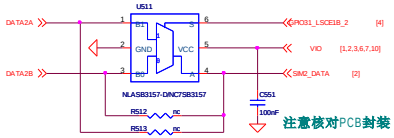

注意核对PCB封装

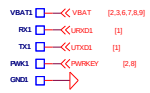

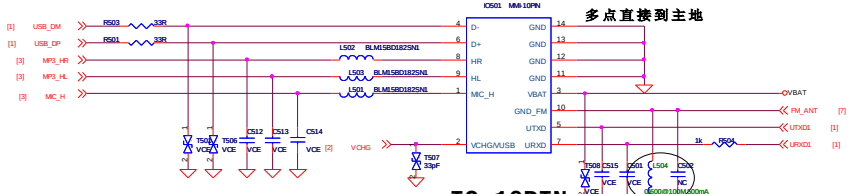

离IO口近，到IO之间的线加粗

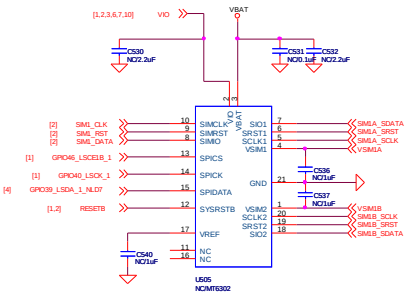

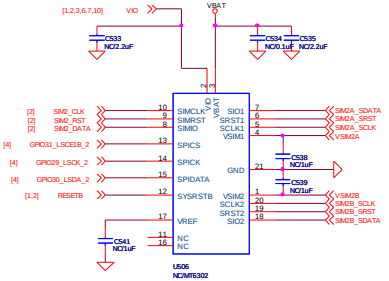

Title	05 SIM, IO, LCM, CAM		
Size A2	Document Number G01		Rev V0.1
Date: Wednesday, January 26, 2011	Sheet 5 of 8		

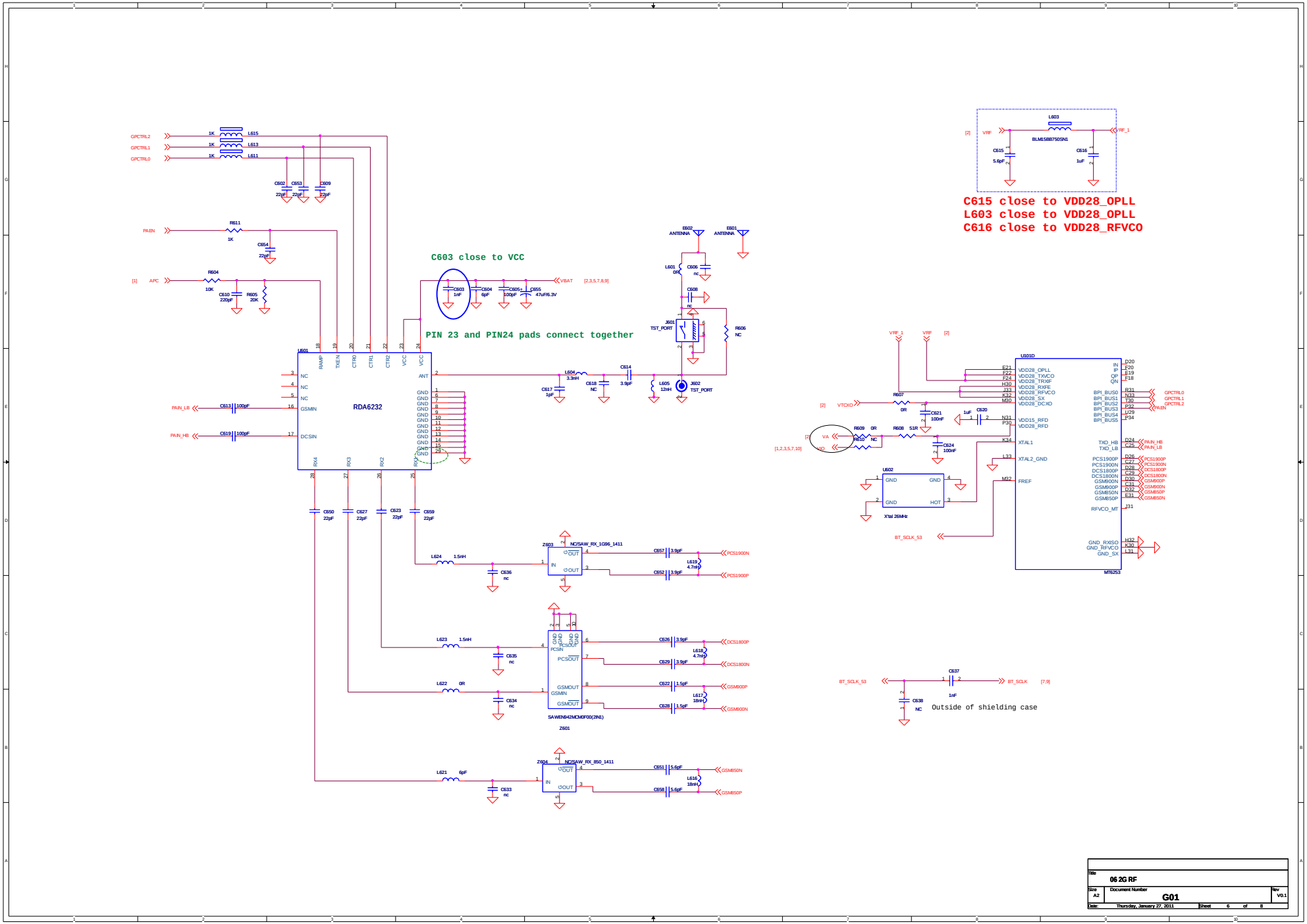
C615 close to VDD28_OPLL
L603 close to VDD28_OPLL
C616 close to VDD28_RFVCO
C603 close to VCC
PIN 23 and PIN24 pads connect together
RDA6232
U601
U101D
MT6253
Z601
Z603
Z604
Outside of shielding case
Title
06 2G RF
Size
A2
Document Number
G01
Rev
V0.1
Date:
Thursday, January 27, 2011
Sheet
6
of
8

MT6612

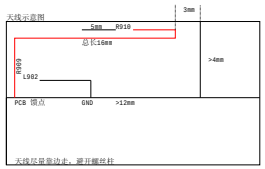

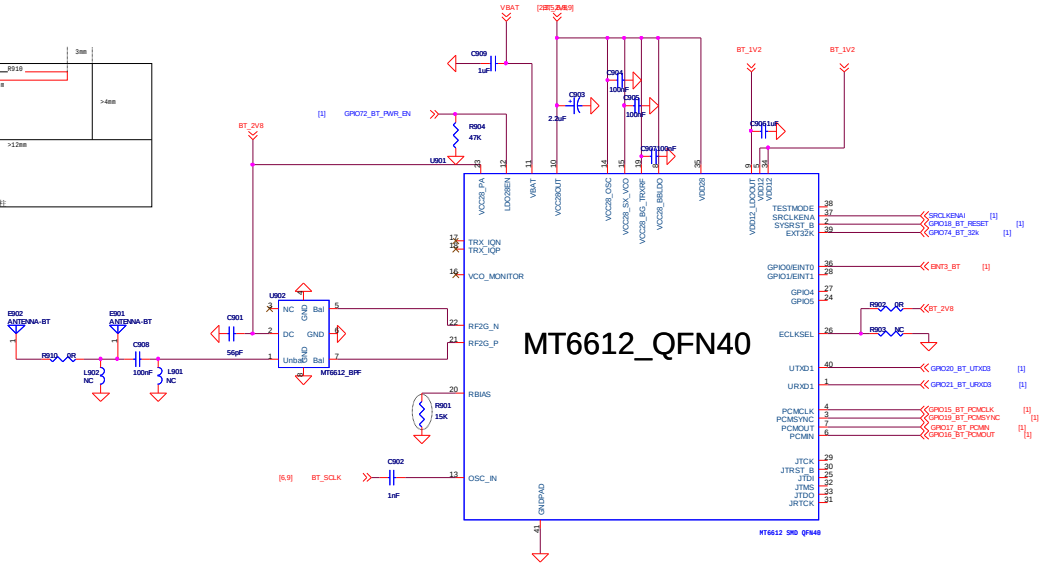

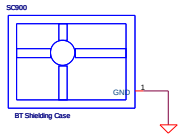

BT

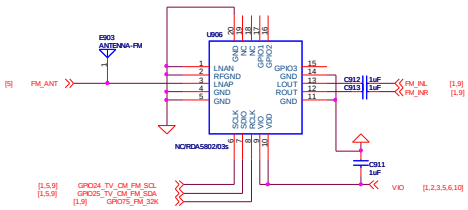

Title	07 BT, FM	
Size A2	Document Number G01	Rev V0.1
Date: Thursday, February 24, 2011	Sheet 7 of 8	

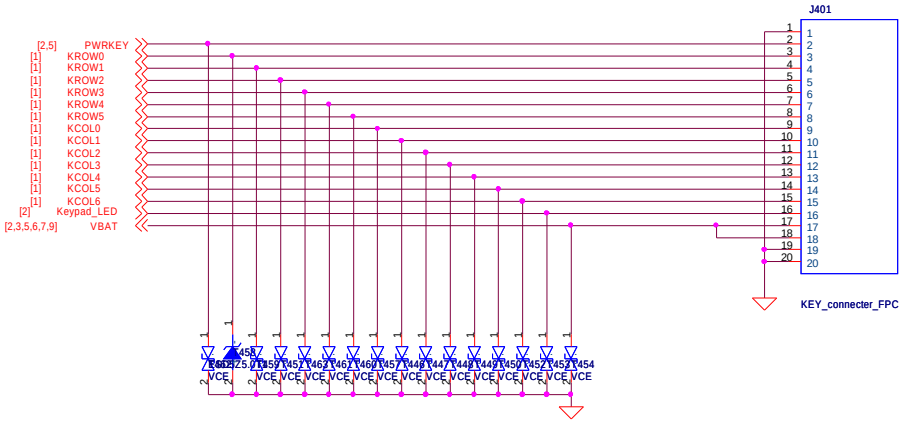

飞梭FPC在主板上的焊盘
在FPC焊盘增加地，防止干扰

Title	08 KEY CONNECTOR		
Size A3	Document Number G01		Rev V0.1
Date: Tuesday, January 18, 2011	Sheet 8 of 8		

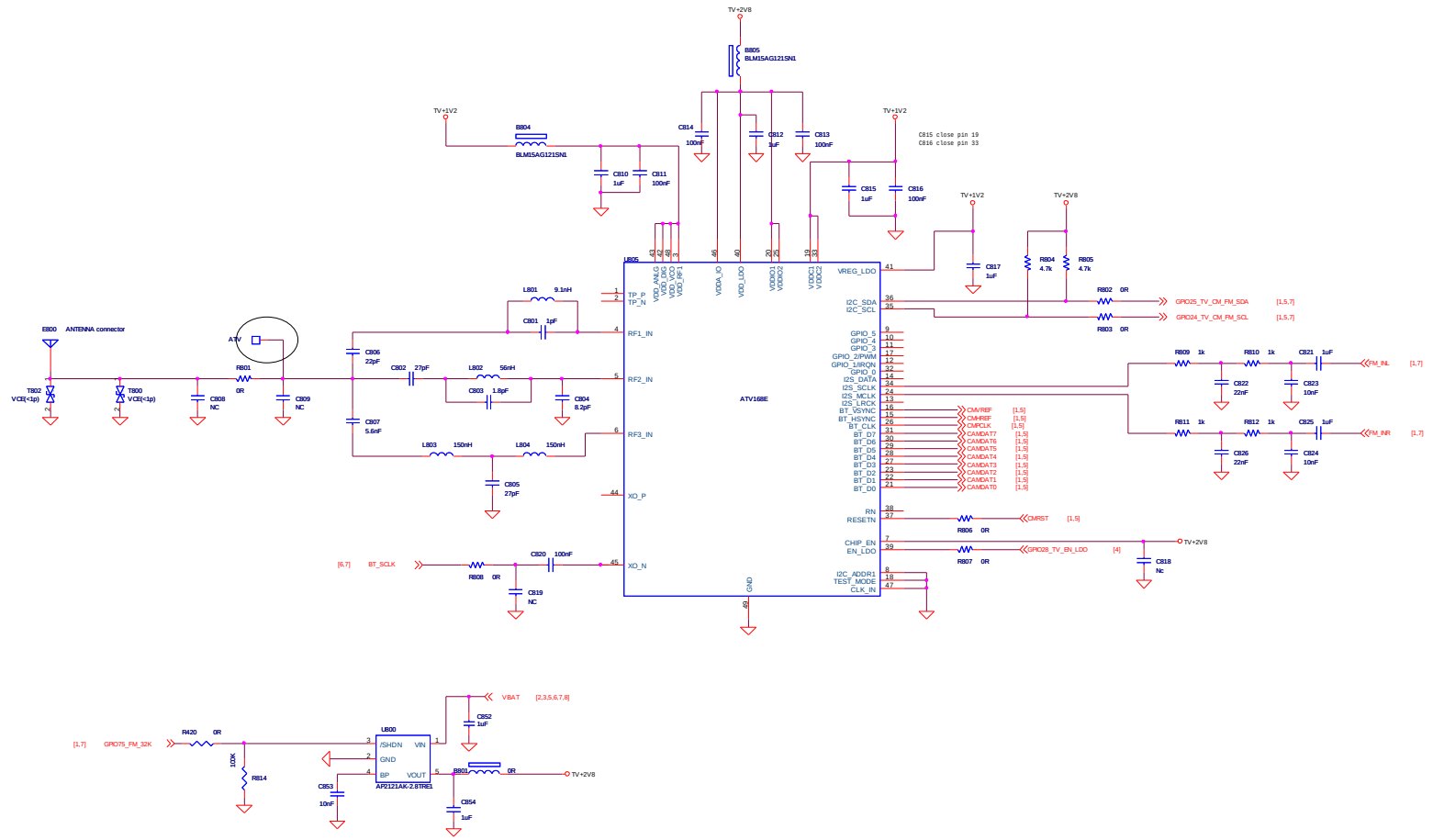

Title	09 TV	
Size A2	Document Number G01	Rev V0.1
Date: Wednesday, February 23, 2011	Sheet 9 of 10	