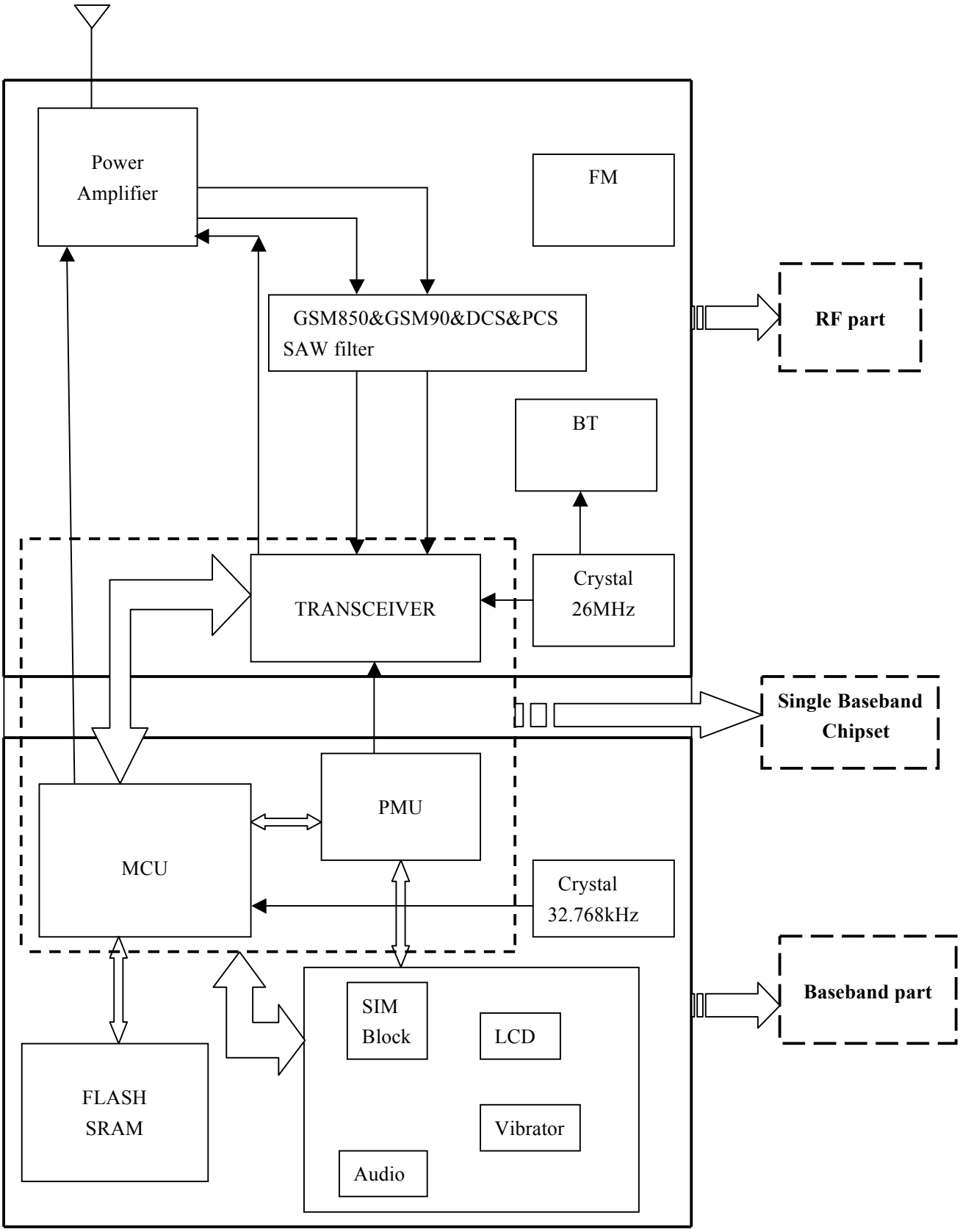
Power
Amplifier
FM
GSM850&GSM90&DCS&PCS
SAW filter
RF part
BT
TRANSCEIVER
Crystal
26MHz
Single Baseband
Chipset
PMU
MCU
Crystal
32.768kHz
Baseband part
SIM
Block
LCD
FLASH
SRAM
Vibrator
Audio