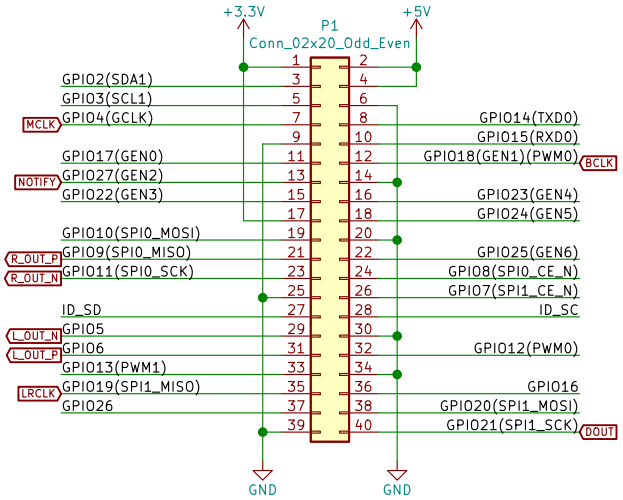

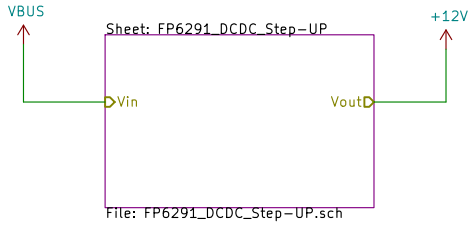

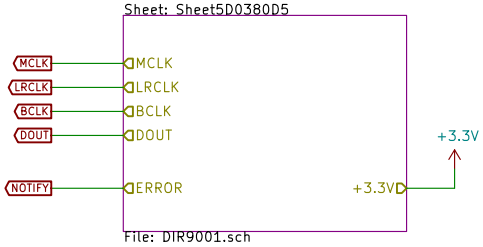

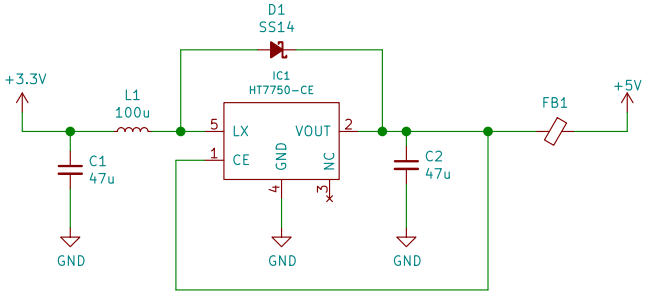

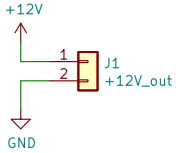

ID_SD and ID_SC PINS:
These pins are reserved for HAT ID EEPROM.

At boot time this I2C interface will be interrogated to look for an EEPROM that identifies the attached board and allows automagic setup of the GPIOs (and optionally, Linux drivers).

DO NOT USE these pins for anything other than attaching an I2C ID EEPROM. Leave unconnected if ID EEPROM not required.

Mounting Holes

Sheet: /		
File: DIR9001_for_RasPi_DAC.sch		
Title:		
Size: A4	Date: 15 nov 2012	**Rev:**
KiCad E.D.A. kicad (5.1.6)-1		Id: 1/3

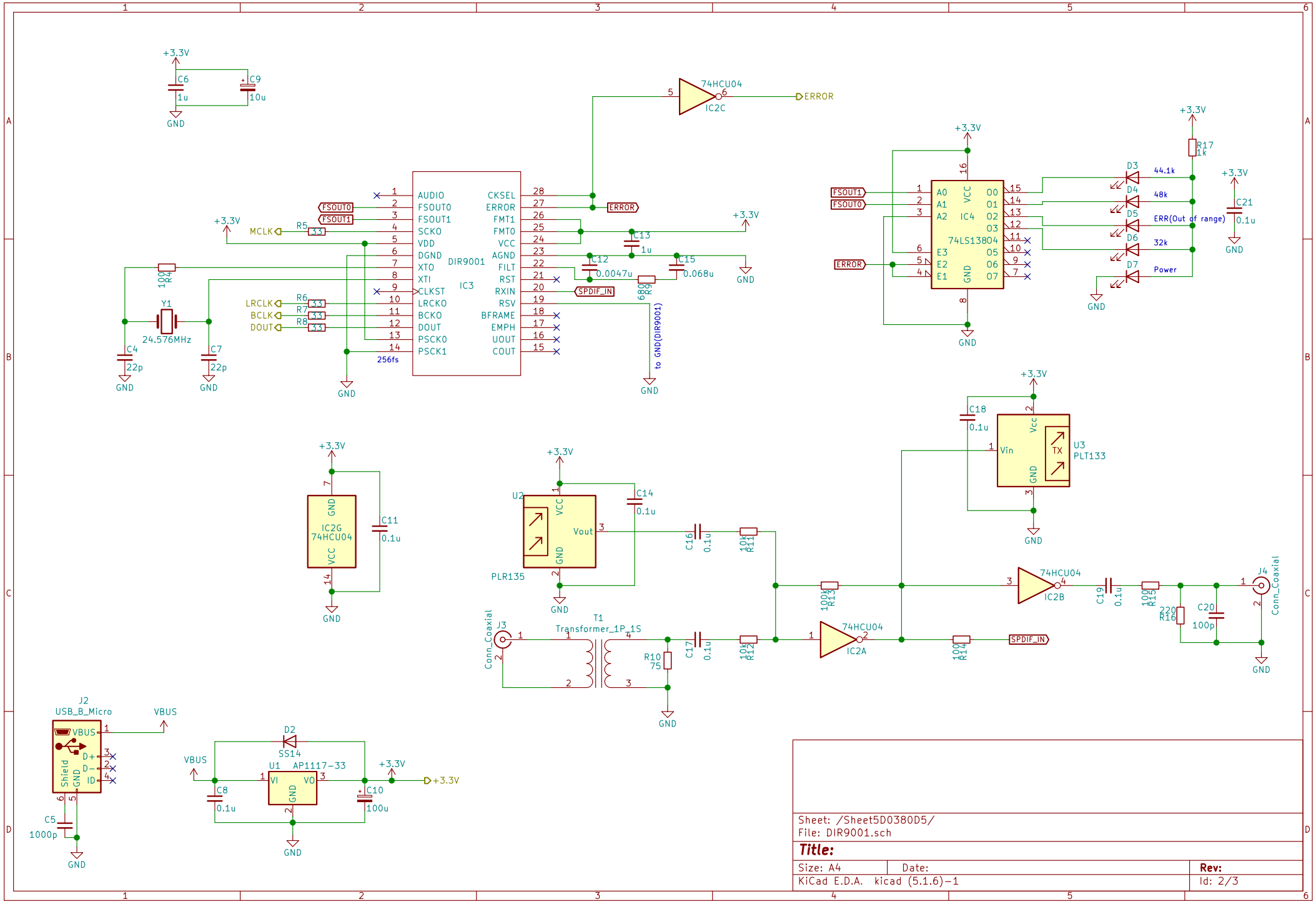
+3.3V
C6
1u
C9
10u
GND
74HCU04
IC2C
ERROR
DIR9001
IC3
AUDIO
FSOUT0
FSOUT1
SCKO
VDD
DGND
XTO
XTI
CLKST
LRCKO
BCKO
DOUT
PSCK0
PSCK1
256fs
CKSEL
FMT1
FMT0
VCC
AGND
FILT
RST
RXIN
RSV
BFRAME
EMPH
UOUT
COUT
MCLK
R5
33
R4
100
Y1
24.576MHz
C4
22p
C7
22p
LRCLK
BCLK
DOUT
R6
R7
R8
C13
1u
C12
0.0047u
C15
0.068u
SPDIF_IN
6800
to GND(DIR9001)
74LS138
IC4
A0
A1
A2
E3
E2
E1
O0
O1
O2
O3
O5
O6
O7
D3
D4
D5
D6
D7
44.1k
48k
ERR(Out of range)
32k
Power
R17
1k
C21
0.1u
IC2G
74HCU04
C11
0.1u
U2
PLR135
Vout
C14
0.1u
C16
0.1u
10k
R11
C18
0.1u
U3
PLT133
Vin
TX
Vcc
100k
R13
IC2B
C19
0.1u
100
R15
220
R16
C20
100p
J4
Conn_Coaxial
J3
T1
Transformer_1P_1S
R10
75
C17
0.1u
10k
R12
IC2A
100
R14
SPDIF_IN
J2
USB_B_Micro
VBUS
Shield
D+
D-
ID
C5
1000p
D2
SS14
U1
AP1117-33
VI
VO
C8
0.1u
C10
100u
Sheet: /Sheet5D0380D5/
File: DIR9001.sch
Title:
Size: A4
Date:
Rev:
KiCad E.D.A. kicad (5.1.6)-1
Id: 2/3

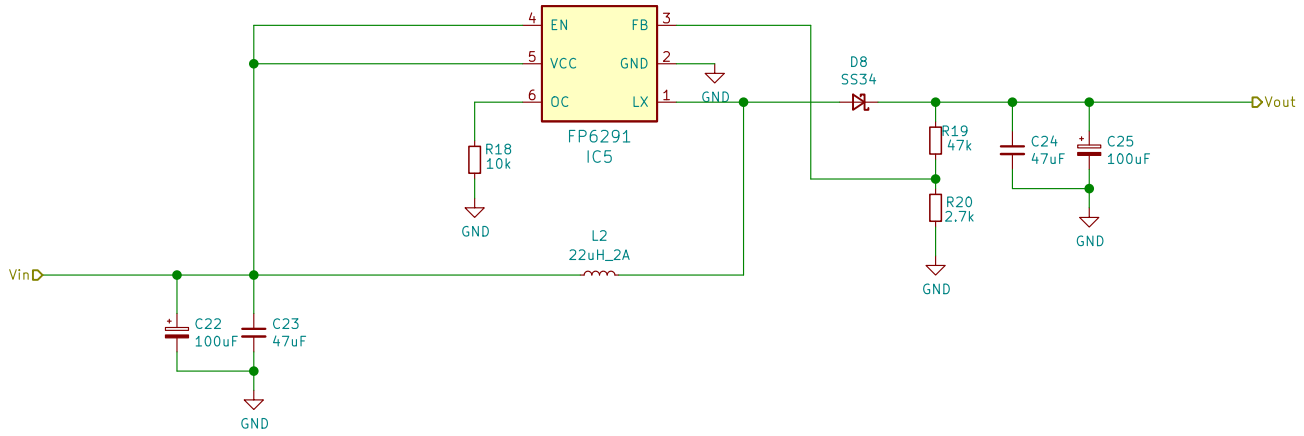

Sheet: /FP6291_DCDC_Step-UP/
File: FP6291_DCDC_Step-UP.sch

Title:

Size: A4	Date:	Rev:
KiCad E.D.A. kicad (5.1.6)-1		Id: 3/3