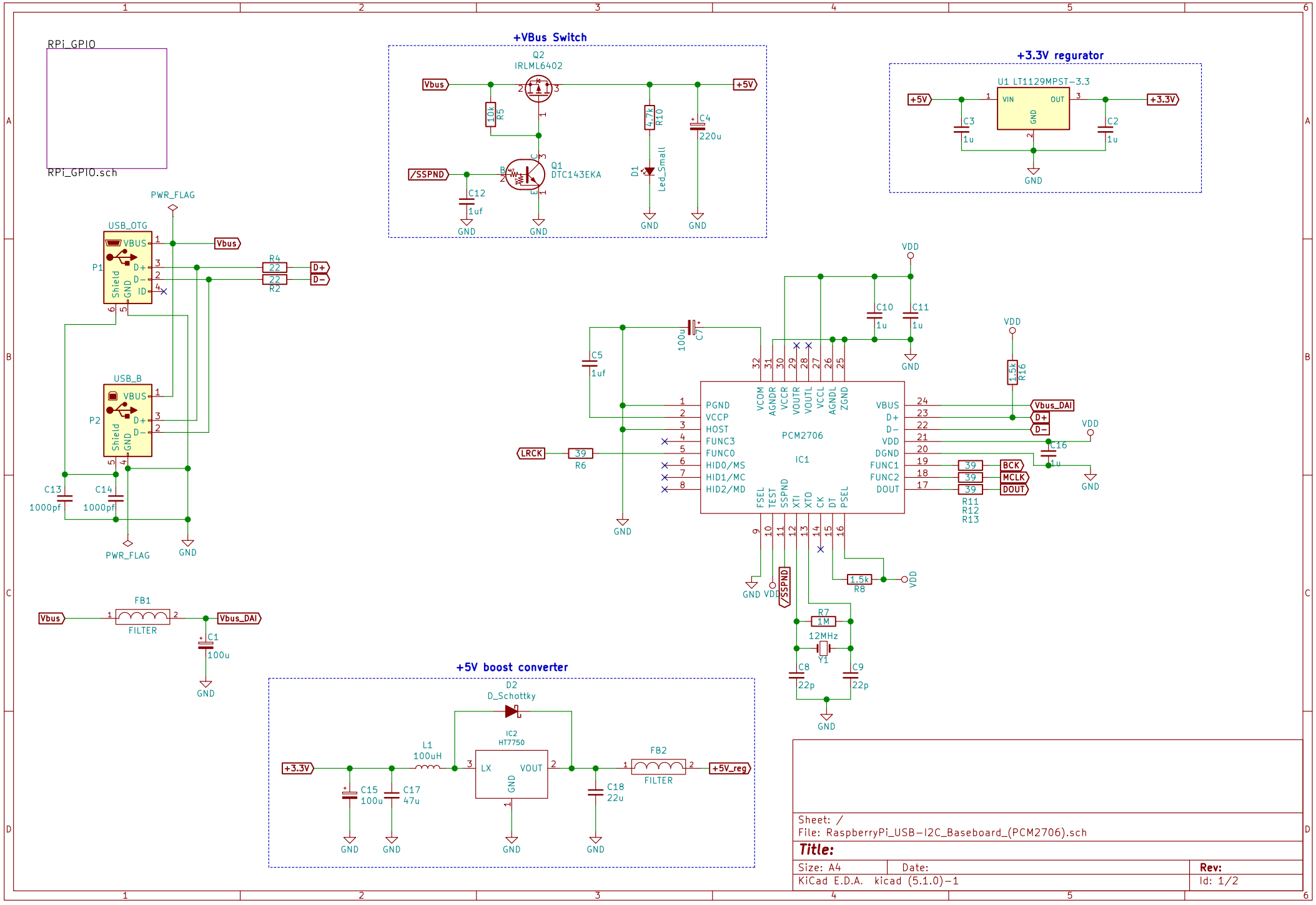
RPi_GPIO
RPi_GPIO.sch
+VBus Switch
Q2
IRLML6402
Vbus
+5V
10k
R5
4.7k
R10
C4
220u
/SSPND
Q1
DTC143EKA
C12
1uf
D1
Led_Small
GND
+3.3V regurator
U1 LT1129MPST-3.3
VIN
OUT
GND
C3
1u
C2
1u
+3.3V
PWR_FLAG
USB_OTG
P1
VBUS
D+
D-
ID
Shield
R4
22
R2
22
USB_B
P2
C13
1000pf
C14
1000pf
VDD
C10
1u
C11
1u
C7
100u
C5
1uf
PCM2706
IC1
PGND
VCCP
HOST
FUNC3
FUNC0
HID0/MS
HID1/MC
HID2/MD
VCOM
AGNDR
VCCR
VOUTR
VOUTL
VCCL
AGNDL
ZGND
VBUS
D+
D-
VDD
DGND
FUNC1
FUNC2
DOUT
FSEL
TEST
SSPND
XTI
XTO
CK
DT
PSEL
LRCK
39
R6
1.5k
R16
Vbus_DAI
C16
1u
BCK
MCLK
DOUT
R11
R12
R13
1.5k
R8
R7
1M
12MHz
Y1
C8
22p
C9
22p
FB1
FILTER
C1
100u
+5V boost converter
D2
D_Schottky
IC2
HT7750
L1
100uH
LX
VOUT
C15
100u
C17
47u
C18
22u
FB2
+5V_reg
Sheet: /
File: RaspberryPi_USB-I2C_Baseboard_(PCM2706).sch
Title:
Size: A4
Date:
Rev:
KiCad E.D.A. kicad (5.1.0)-1
Id: 1/2

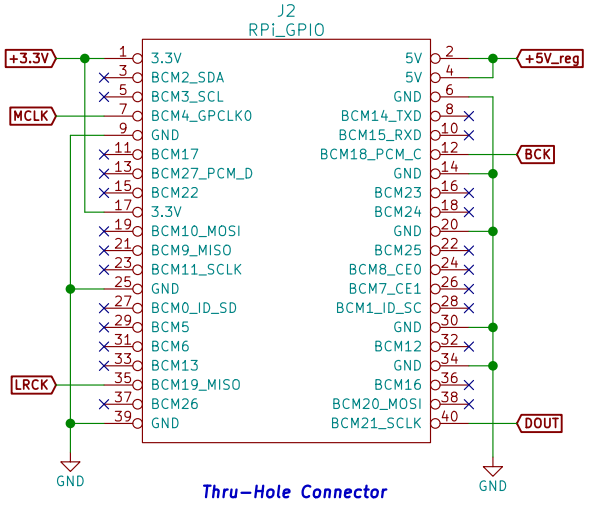

Sheet: /RPi_GPIO/
File: RPi_GPIO.sch

Title:

Size: A4	Date:	**Rev:**
KiCad E.D.A. kicad (5.1.0)-1		Id: 2/2