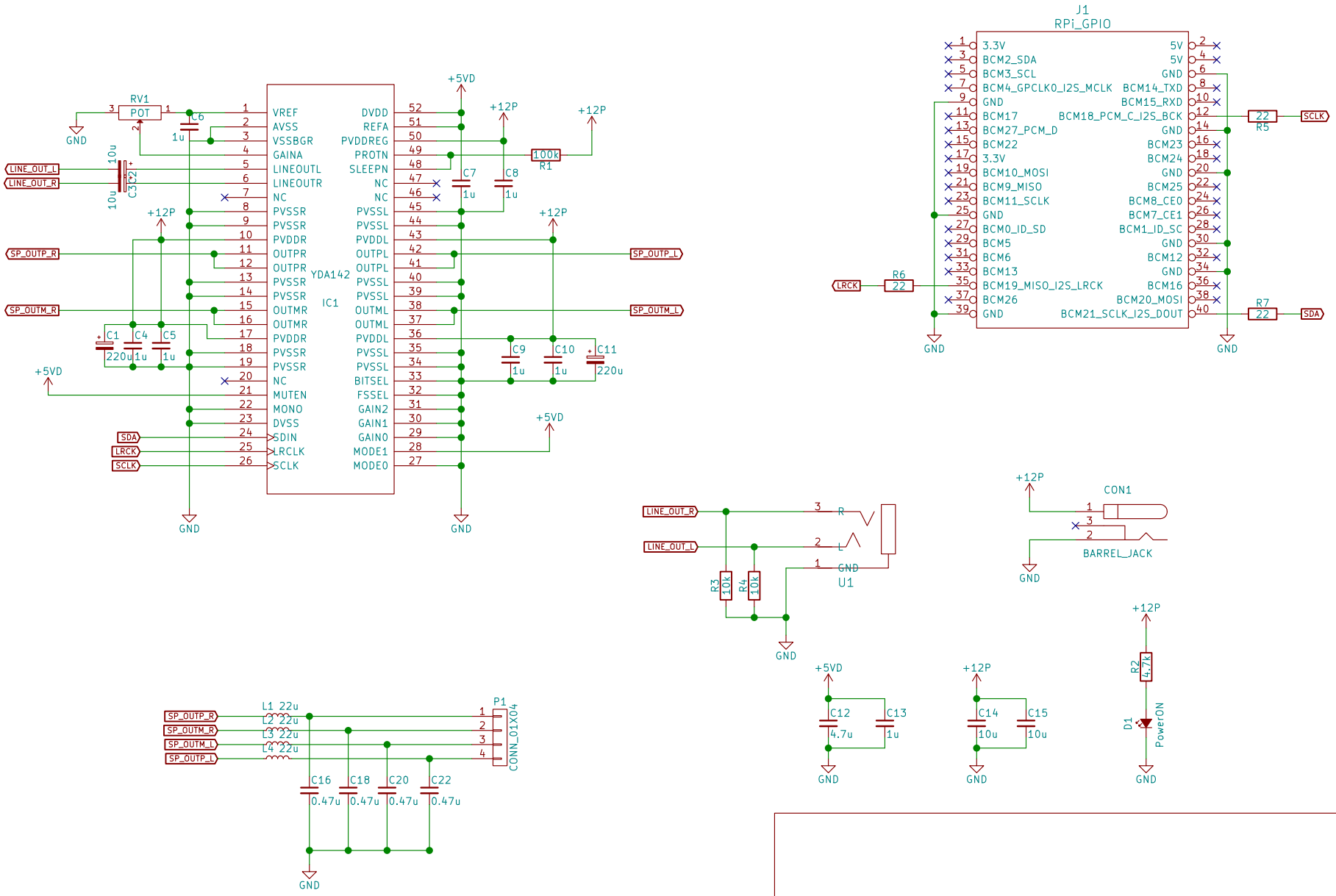

Sheet: /
File: YDA142_DigitalAMP_HAT.sch

Title: YDA142 Digital Amp

Size: A4	Date: 2017-12-03	Rev:
KiCad E.D.A. kicad 4.0.1-stable		Id: 1/1