Micro SD Card Micro SDHC Mini TF Card Adapter Reader Module for Arduino

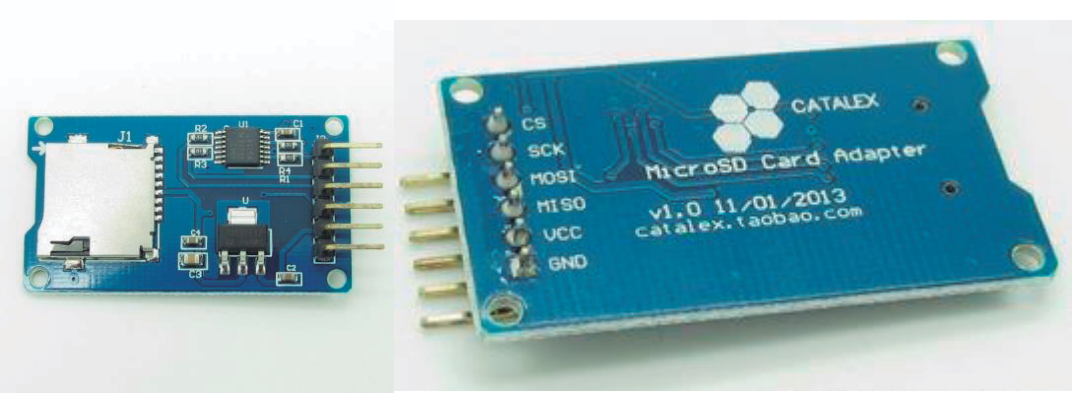

Description

- The module (MicroSD Card Adapter) is a Micro SD card reader module for reading and writing through the file system and the SPI interface driver, SCM system can be completed within a file MicroSD card
- Support Micro SD Card, Micro SDHC card (high speed card)
- Level conversion circuit board that can interface level is 5V or 3.3V
- Power supply is 4.5V ~ 5.5V, 3.3V voltage regulator circuit board
- Communications interface is a standard SPI interface
- 4 M2 screws positioning holes for easy installation
- Control Interface: A total of six pins (GND, VCC, MISO, MOSI, SCK, CS), GND to ground, VCC is the power supply, MISO, MOSI, SCK for SPI bus, CS is the chip select signal pin;
- 3.3V regulator circuit: LDO regulator output 3.3V for level conversion chip, Micro SD card supply;
- Level conversion circuit: Micro SD card to signal the direction of converts 3.3V, MicroSD card interface to control the direction of the MISO signal is also converted to 3.3V, general AVR microcontroller systems can read the signal;
- Micro SD card connector: self bomb deck, easy card insertion.
- Positioning holes: 4 M2 screws positioning holes with a diameter of 2.2mm, so the module is easy to install positioning, to achieve inter-module combination.

Interface Parameters:

Items	Min	Typical	Max	Unit
Power Voltage VCC	4.5	**5**	5.5	V
Current	0.2	**80**	200	mA
Interface Electrical Potential	3.3 or 5			V
Support Card Type	Micro SD Card(<=2G), Mirco SDHC Card(<=32G)			—
Size	42X24X12			mm
Weight	5			g
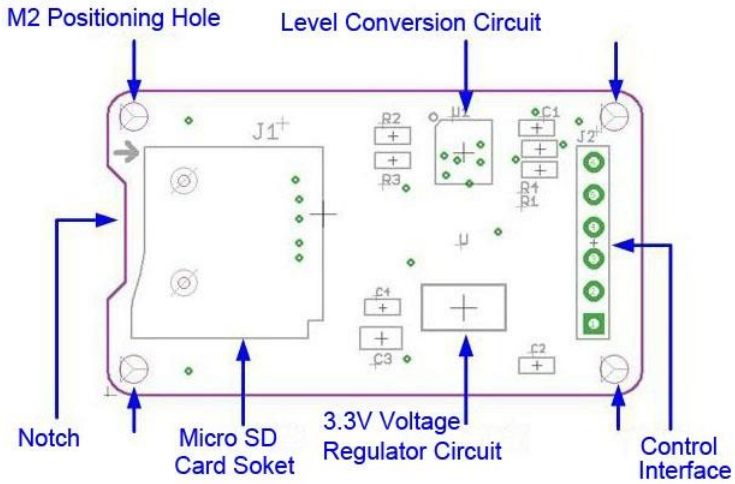
Mirco SD Card Interface Module: