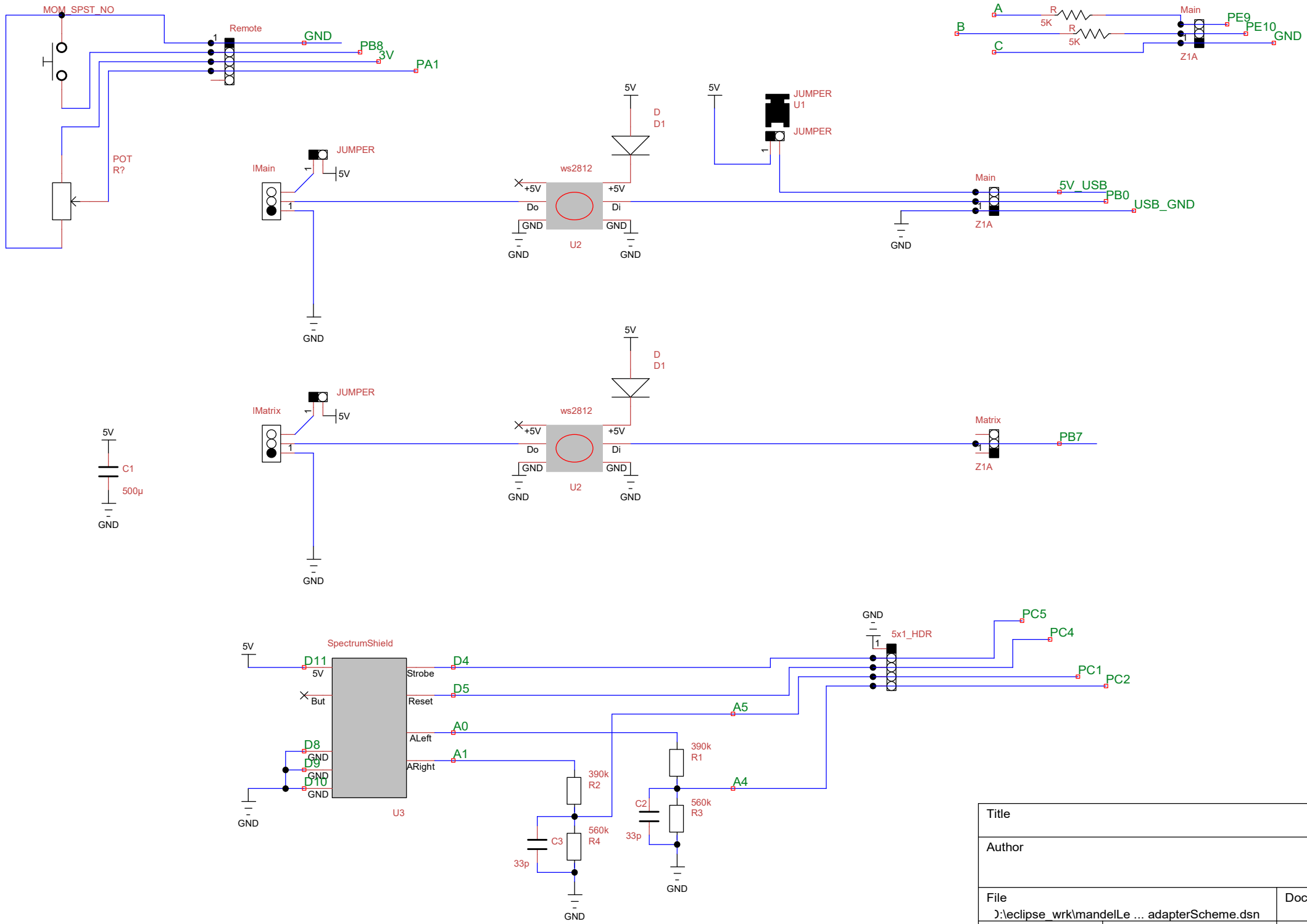

Title		
Author		
File):\eclipse_wrk\mandelLe ... adapterScheme.dsn		Document
Revision 1.0	Date	Sheets 1 of 1