Part 2

4-bit to 2x Digit

	B_3	B_2	B_1	B_0	H_0	H_1	H_2	H_3	H_4	H_5	H_6
0	0	0	0	0	0	0	0	0	0	0	1
1	0	0	0	1	1	0	0	1	1	1	1
2	0	0	1	0	0	0	1	0	0	1	0
3	0	0	1	1	0	0	0	0	1	1	0
4	0	1	0	0	1	0	0	1	1	0	0
5	0	1	0	1	0	1	0	0	1	0	0
6	0	1	1	0	0	1	0	0	0	0	0
7	0	1	1	1	0	0	0	1	1	1	1
8	1	0	0	0	0	0	0	0	0	0	0
9	1	0	0	1	0	0	0	1	1	0	0

H_0

B_1B_0 \ B_3B_2	00	01	11	10
00	0	1	–	0
01	1	0	–	0
11	0	0	–	–
10	0	0	–	–

$= \overline{B_3}\cdot B_2\cdot \overline{B_1}\cdot \overline{B_0} + \overline{B_3}\cdot \overline{B_2}\cdot \overline{B_1}\, B_0$

$= \overline{B_3}\cdot \overline{B_1}\left(B_2\cdot \overline{B_0} + \overline{B_2}\cdot B_0\right)$

H_1

B_1B_0 \ B_3B_2	00	01	11	10
00	0	0	–	0
01	0	1	–	0
11	0	0	–	–
10	0	1	–	–

$= \overline{B_3}\cdot B_2\cdot \overline{B_1}\cdot B_0 + \overline{B_3}\, B_2\cdot B_1\cdot \overline{B_0}$

$= \overline{B_3}\cdot B_2\left(\overline{B_1}\cdot B_0 + B_1\, \overline{B_0}\right)$

H_2

B_1B_0 \ B_3B_2	00	01	11	10
00	0	0	–	0
01	0	0	–	0
11	0	0	–	–
10	1	0	–	–

$= \overline{B_3}\, \overline{B_2}\, B_1\, \overline{B_0}$

H_3

B_1B_0 \ B_3B_2	00	01	11	10
00	0	1	–	0
01	1	0	–	1
11	0	1	–	–
10	0	0	–	–

$= \overline{B_1}\, B_0\left(B_3 + \overline{B_2}\right) + \overline{B_3}\, B_2\left(\overline{B_1}\, \overline{B_0} + B_1 B_0\right)$

H_4

B_1B_0 \ B_3B_2	00	01	11	10
00	0	1	–	0
01	1	1	–	1
11	1	1	–	–
10	0	0	–	–

$= B_0 + \overline{B_3}\, B_2\left(\overline{B_1} + B_0\right)$

H_5

B_1B_0 \ B_3B_2	00	01	11	10
00	0	0	–	0
01	1	0	–	0
11	1	1	–	–
10	1	0	–	–

$= B_1 B_0 + \overline{B_3}\, \overline{B_2}\left(B_1 + B_0\right)$

H_6

B_1B_0 \ B_3B_2	00	01	11	10
00	1	0	–	0
01	1	0	–	0
11	0	1	–	–
10	0	0	–	–

$= \overline{B_3}\, \overline{B_2}\, \overline{B_1} + \overline{B_3}\, B_2\, B_1\, B_0$

Circuit A

V_3	V_2	V_1	V_0	dec_1	dec_0	d_1	d_0
0	0	0	0	0	0	0000	0000
0	0	0	1	0	1	0000	0001
0	0	1	0	0	2	0000	0010
0	0	1	1	0	3	0000	0011
0	1	0	0	0	4	0000	0100
0	1	0	1	0	5	0000	0101
0	1	1	0	0	6	0000	0110
0	1	1	1	0	7	0000	0111
1	0	0	0	0	8	0000	1000
1	0	0	1	0	9	0000	1001
1	0	1	0	1	0	0001	0000
1	0	1	1	1	1	0001	0001
1	1	0	0	1	2	0001	0010
1	1	0	1	1	3	0001	0011
1	1	1	0	1	4	0001	0100
1	1	1	1	1	5	0001	0101

Circuit A

$V \geq 10$ when $V_3(V_2 + V_1)$

V_3	V_2	V_1	A_2	A_1	A_0
0	1	0	0	0	0
0	1	1	0	0	1
1	0	0	0	1	0
1	0	1	0	1	1
1	1	0	1	0	0
1	1	1	1	0	1

A_2

V_1V_0 \ V_2	0	1
00	–	0
01	–	0
11	0	1
10	0	1

$= V_2 V_1$

A_1

V_1V_0 \ V_2	0	1
00	–	1
01	–	1
11	0	0
10	0	0

$= \overline{V_1}$

A_0

V_1V_0 \ V_2	0	1
00	–	0
01	–	1
11	1	1
10	0	0

$= V_0$

Part 3

b	a	c_i	C_o	S
0	0	0	0	0
0	0	1	0	1
0	1	0	0	1
0	1	1	1	0
1	0	0	0	1
1	0	1	1	0
1	1	0	1	0
1	1	1	1	1

C_o

$a c_i$ \ b	0	1
00	0	0
01	0	1
11	1	1
10	0	1

$= b\,\bar{a}\,\bar{c_i} + a c_i$

S

$a c_i$ \ b	0	1
00	0	1
01	1	0
11	0	1
10	1	0

$= b(\bar{a}\,\bar{c_i} + a c_i) + \bar{b}(\bar{a} c_i + a \bar{c_i})$

Part 4

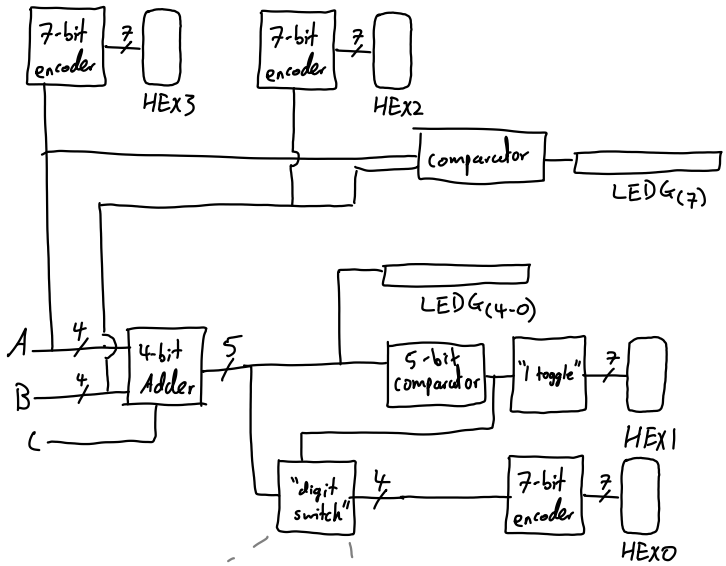

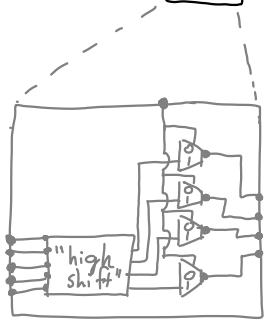

i_4	i_3	i_2	i_1	i_0	digits	O_3	O_2	O_1	O_0
0	1	0	1	0	10	0	0	0	0
0	1	0	1	1	11	0	0	0	1
0	1	1	0	0	12	0	0	1	0
0	1	1	0	1	13	0	0	1	1
0	1	1	1	0	14	0	1	0	0
0	1	1	1	1	15	0	1	0	1
1	0	0	0	0	16	0	1	1	0
1	0	0	0	1	17	0	1	1	1
1	0	0	1	0	18	1	0	0	0
1	0	0	1	1	19	1	0	0	1

Sum

outputs

O_3

$i_4 i_3 i_2$ / $i_1 i_0$	000	001	011	010	110	111	101	100
00	/	/	0	/	/	/	/	0
01	/	/	0	/	/	/	/	0
11	/	/	0	0	/	/	/	1
10	/	/	0	0	/	/	/	1

$= i_4 \bar{i}_3 \bar{i}_2 i_1$

O_2

$i_4 i_3 i_2$ / $i_1 i_0$	000	001	011	010	110	111	101	100
00	/	/	0	/	/	/	/	1
01	/	/	0	/	/	/	/	1
11	/	/	1	0	/	/	/	0
10	/	/	1	0	/	/	/	0

$= \bar{i}_4 i_3 i_2 i_1 + i_4 \bar{i}_3 \bar{i}_2 \bar{i}_1$

O_1

$i_4 i_3 i_2$ / $i_1 i_0$	000	001	011	010	110	111	101	100
00	/	/	1	/	/	/	/	1
01	/	/	1	/	/	/	/	1
11	/	/	0	0	/	/	/	0
10	/	/	0	0	/	/	/	0

$= \bar{i}_1$

O_0

$i_4 i_3 i_2$ / $i_1 i_0$	000	001	011	010	110	111	101	100
00	/	/	0	/	/	/	/	0
01	/	/	1	/	/	/	/	1
11	/	/	1	1	/	/	/	1
10	/	/	0	0	/	/	/	0

$= i_0$

Part 5

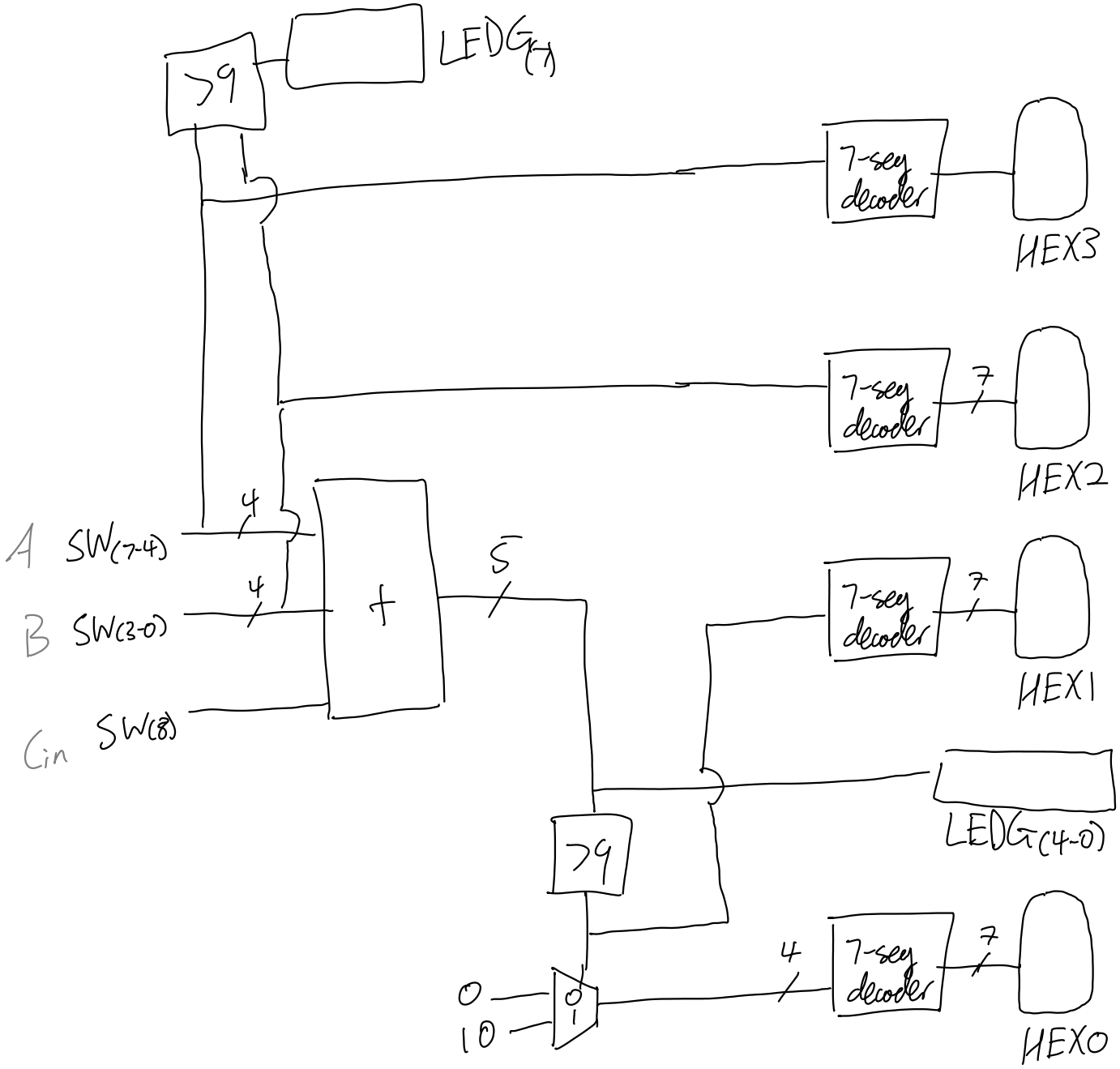
>9
LEDG(7)
7-seg decoder
HEX3
7-seg decoder
7
HEX2
A SW(7-4)
4
B SW(3-0)
4
Cin SW(8)
+
5
7-seg decoder
7
HEX1
LEDG(4-0)
>9
0
10
4
7-seg decoder
7
HEX0