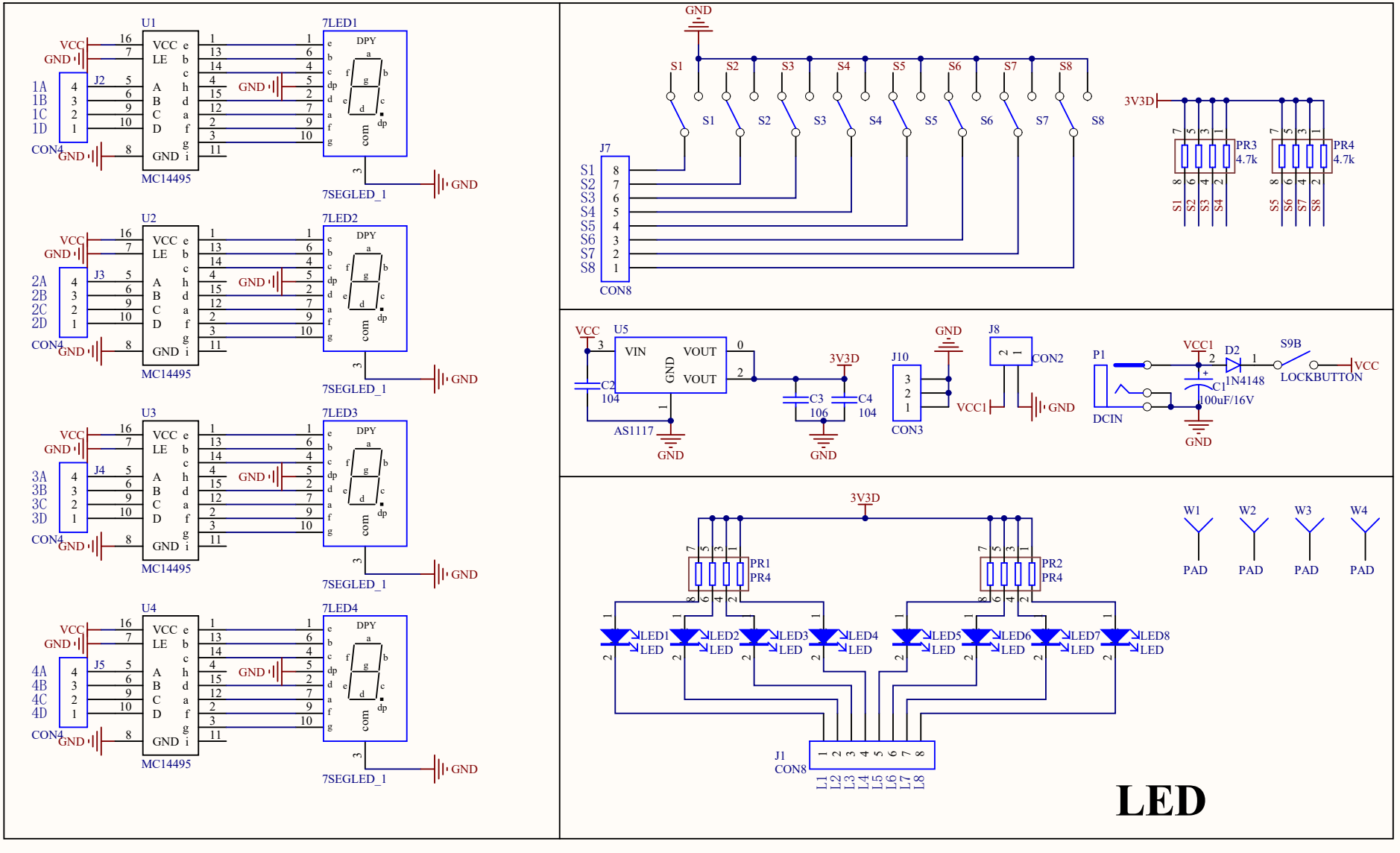
U1
U2
U3
U4
MC14495
7LED1
7LED2
7LED3
7LED4
7SEGLED_1
J2
J3
J4
J5
CON4
VCC
GND
1A
1B
1C
1D
2A
2B
2C
2D
3A
3B
3C
3D
4A
4B
4C
4D
J7
CON8
S1
S2
S3
S4
S5
S6
S7
S8
3V3D
PR3
PR4
4.7k
U5
VIN
VOUT
AS1117
C2
104
C3
106
C4
104
J10
CON3
J8
CON2
VCC1
P1
DCIN
D2
1N4148
C1
100uF/16V
S9B
LOCKBUTTON
PR1
PR2
LED1
LED2
LED3
LED4
LED5
LED6
LED7
LED8
LED
J1
W1
W2
W3
W4
PAD
LED