POLITECNICO DI MILANO

Fuel cell energy systems – Part B

Stefano Campanari - Dipartimento di Energia

June 2017

Group of Energy COnversion Systems

Types of FC

Classification* of Fuel Cells [based on the electrolyte]:

Low Temperature:

- **alkaline** (*Alkaline Fuel Cell*, AFC)
- **polymer electrolyte** (*Polymer Electrolyte Membrane Fuel Cell*, PEM o PEFC)
- **phosphoric acid** (*Phosphoric Acid Fuel Cell*, PAFC)

High temperature:

- **molten carbonate** (*Molten Carbonate Fuel Cell*, MCFC)
- **solid oxide** (*Solid Oxide Fuel Cell*, SOFC)

Name	Electrolyte	Ion transported	Operating Temperature
AFC	Alkaline (liquid)	OH^-	70-250°C
PEFC o PEM	Polymeric (solid)	H^+	80-120°C
PAFC	Phosporic Acid (liquid)	H^+	200°C
MCFC	Molten Carbonate (liquid)	$CO_3^=$	600-700°C
SOFC	Metallic / Ceramic Oxide (solid)	$O^=$	650-1000°C

(*) focusing here on the most important types

Comparison among FC types – I

	Fuel Cell Type	Anode Reaction	Ion Transport In Electrolyte	Cathode Reaction	Operating Temperature (˚C)
LT FC	PEM	$H_2 \rightarrow 2e^- + 2H^+$	$H^+ \longrightarrow$	$2H^+ + 1/2\ O_2 + 2e^- \rightarrow H_2O$ **	60-80
LT FC	KOH	* $2e^- + 2H_2O \leftarrow H_2 + 2(OH)^-$	$\longleftarrow OH^-$	$2(OH)^- \leftarrow H_2O + 1/2\ O_2 + 2e^-$	<120
LT FC	PAFC	$H_2 \rightarrow 2e^- + 2H^+$	$H^+ \longrightarrow$	$2H^+ + 1/2\ O_2 + 2e^- \rightarrow H_2O$ **	200
HT FC	MCFC	* $2e^- + H_2O + CO_2 \leftarrow H_2 + CO_3^=$	$\longleftarrow CO_3^=$	$CO_3^= \leftarrow 1/2\ O_2 + CO_2 + 2e^-$	650
HT FC	SOFC	* $2e^- + H_2O \leftarrow H_2 + O^=$	$\longleftarrow O^=$	$O^= \leftarrow 1/2\ O_2 + 2e^-$	600-1000

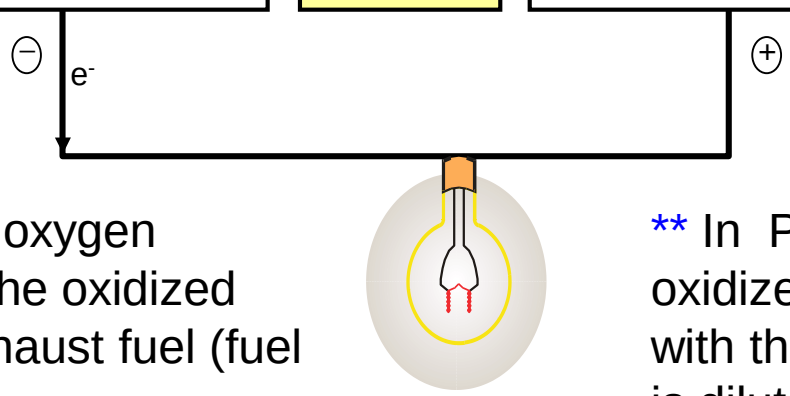

* The electrolyte transports oxygen through $O^=$ or $CO_3^=$ ions ; the oxidized products are mixed with exhaust fuel (fuel is diluted by products)

** In PEM and PAFC the oxidized products are mixed with the oxidant flow (oxidant is diluted by products)

Fuels for FCs

The primary fuel for all FC systems is hydrogen, although HTFCs show a wider fuel flexibility extending to syngas and hydrocarbons.

- Hydrogen can be:
  1. Produced in centralized plants (e.g. through electrolysis or from other fuels) and distributed to FC systems (new pipelines, liquid transport …)
  2. Produced locally, close to the FC plant or **within** the fuel cell package, depending on its origin (fossil fuels – e.g. natural gas; biomass; renewables…), exploiting hydrocarbon reforming reactions or other fuel processing techniques.

In option 1) , if hydrogen is available from a centralized production, it can be used in LTFCs (higher potential efficiency) as well as HTFCs

- Fuel must generally be rather pure: in all cases it is necessary to reduce the content of contaminants (e.g. sulphur compounds: H_2S, COS …), which may degradate the cell performances irreversibly.

Options for fuel processing in FC units

If H_2 must be generated locally, starting from a fossil fuel like natural gas, there are two options:

- In **low temperature fuel cells**, H_2 must be generated by a dedicated plant section.
  - The most used process is **steam reforming** of natural gas (for the case of methane: $CH_4+H_2O + 206.2$ kJ/mol $\rightarrow 3H_2+CO$), providing heat with a burner using additional fuel
  - The process brings about an efficiency loss: the overall electric efficiency of NG-fuelled PEM or PAFC systems is around 40-42% max (LHV) @ 100-200 kW scale.
  - The process needs adequate purification of hydrogen from CO, which damages the noble metals acting as catalysts in LTFCs

- In **high temperature fuel cells**, H_2 can be generated with an internal reforming process, which
  1. exploits heat from thermal integration with the fuel cell, increasing the system efficiency
  2. significantly simplifies the plant layout

  (see the section on MCFC and SOFC)

Example of fuel processing sequence

Steam reforming is followed by water gas shift (WGS) reactors to increase the H_2 yield and decrease CO%, and a final reactor to reduce CO below tolerable limits.

WGS reaction: $CO+H_2O \rightarrow H_2+CO_2 + 41.2$ kJ/mol

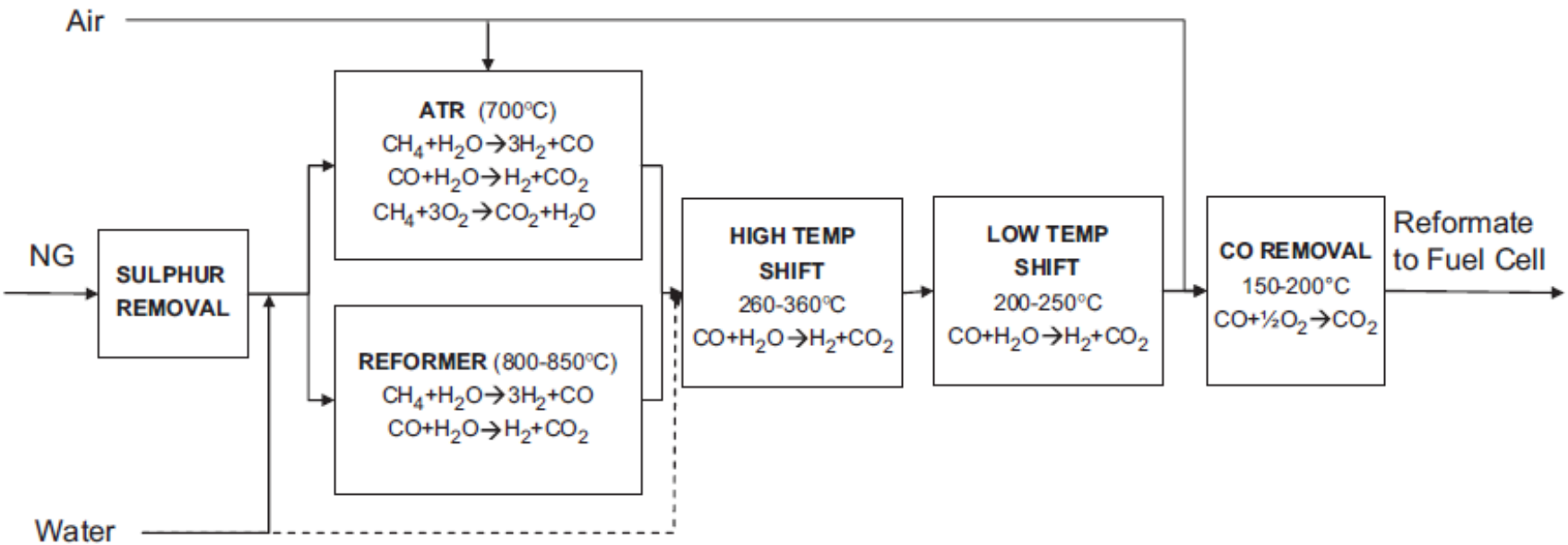

Tolerance to CO (LTFC)

While CO can be a fuel for HTFCs, it is assorbed by the noble metals acting as catalysts in LTFCs.

- The effect is a progressive perfomance decay, proportional to the ratio between H_2 and CO partial pressures; the effect tends to decrease with the cell operating temperature (advantage of PAFC vs. PEM, and high temperature PEM vs low temp. PEM).

Limits (orientative):

- PEM: CO < 10-50 ppm at anode
- PAFC / HTPEM: < 1% at anode

LTFCs necessitate a fuel processing section producing a high purity hydrogen flow

Sulphur tolerance: an issue for both LT and HT FCs

Sulphur compounds negatively affect the fuel processor (reformer) and cell performances.

Cell type	Sulphur tolerance
PEM	< 50 ppm H2S, cumulative and irreversible effect
PAFC	< 50 ppm H2S+COS, < 20 ppm H2S, possibility of regenerating anodes after contamination
MCFC	< 0.5 ppm H2S at cathode (recycling), < 10 ppm at anode , reversible effect
SOFC	< 1 ppm at anode, reversible.
Fuel processor	< 1 ppm

Sulphur is contained in liquid fuels (e.g. 30-300 ppm in weight; the quantity in ppmv in the gases obtained with the fuel processor is reduced at 3-30 ppm), and in natural gas due to H_2S and odorizers (mercaptanes, disulphides; few ppmv up to 50-100 ppmv) .

<u>Abatement systems</u>:

a) with hydrogenation of sulphur compounds, H_2S production and abatement with ZnO sorbent beds, temperature 300-400°C

b) For small size plants, with porous support filters (active carbons, zeolites), periodically regenerated.

Summary of fuel constituent impact

Gas Species	PEFC	AFC	PAFC	MCFC	SOFC
H_2	Fuel	Fuel	Fuel	Fuel	Fuel
CO	Poison (reversible) (50 ppm per stack)	Poison	Poison (<0.5%)	Fuel[a]	Fuel
CH_4	Diluent	Poison	Diluent	Diluent[b]	Fuel[a]
CO_2 & H_2O	Diluent	Poison	Diluent	Diluent	Diluent
S as (H_2S & COS)	No Studies to date (11)	Poison	Poison (<50 ppm)	Poison (<0.5 ppm)	Poison (<1.0 ppm)

[a] In reality, CO, with H_2O, shifts to H_2 and CO_2, and CH_4, with H_2O, reforms to H_2 and CO faster than reacting as a fuel at the electrode.

[b] A fuel in the internal reforming MCFC.

Summary of development status (main types)

Type	Size of existing plants	Development status	Current cost estimate (€/kW)	Electrical efficiency (from NG, simple cycle (*))
PEFC	max 2000 kW	first commercial apps	2000-5000	35-40%
PAFC	max 11 MW	'commercial'	2000	40-42%
MCFC	max 59 MW (**)	research and demo plants	3000-6000	45-50%
SOFC	max 4.5 MW	research and demo plants	4000-8000	50-60%(***)

(*) for stationary applications, depending on size and technology type
(**) single site installation in South Korea based on an array of 2.8 MW units
(***) demonstrated 60% LHV net efficiency in 2 kW units for μCHP

FC types and applications
-
Overview of types and features

LT fuel cells: polymer type (PEFC or PEM)

PEM	$H_2 \rightarrow 2e^- + 2H^+$	$H^+ \longrightarrow$	$2H^+ + 1/2\ O_2 + 2e^- \rightarrow H_2O$	60-80°C
	anode		cathode	

•The electrolyte is a polymer membrane, ex. PTFE like Nafion®117, developed in the 1960s for space applications, which is a proton conductor. Typical temperature 60-80°C (new developments at 130-180°C).

•The membrane must be humidified and works between two porous electrodes impregnated with Pt as catalyst. Nowadays research and development have focused on reducing Platinum loading from 0.4-1 mg/cm^2 to 0.1 mg/cm^2 (*Low-Pt PEMFC; l*ower Pt loading brings about lower costs but decreases cell performances / performance stability vs. time)

• The electrode faces are covered with Teflon or similar hydrofobic compounds (ex. Pt over carbon support). At the anode side, Ruthenium (Ru) can be added to increase CO tolerance.

Laboratory demonstration of condensation of water produced by a PEMFC on the air channel wall.

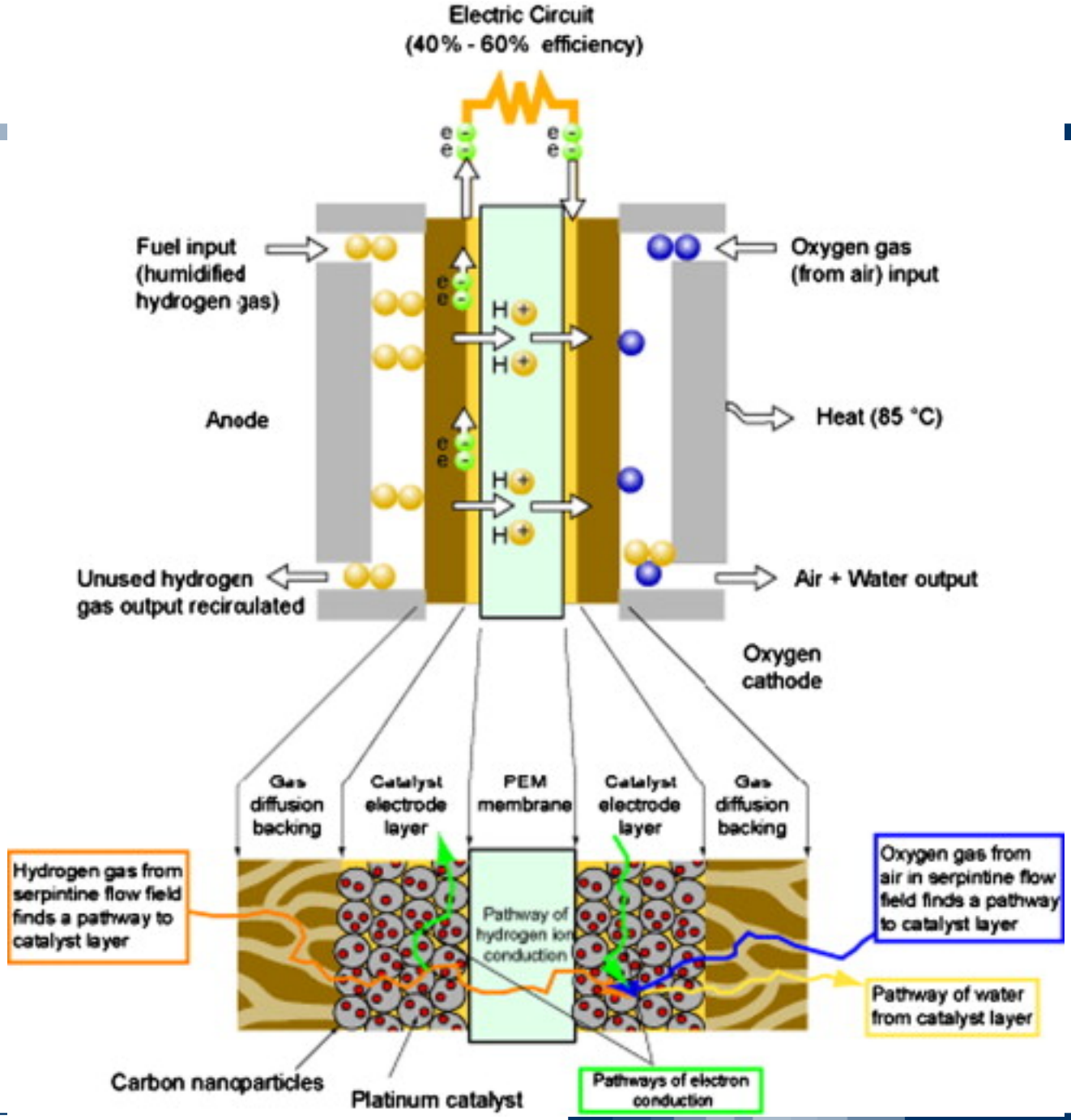
Electric Circuit
(40% - 60% efficiency)
Fuel input
(humidified
hydrogen gas)
Oxygen gas
(from air) input
Anode
Heat (85 °C)
Unused hydrogen
gas output recirculated
Air + Water output
Oxygen
cathode
Gas
diffusion
backing
Catalyst
electrode
layer
PEM
membrane
Catalyst
electrode
layer
Gas
diffusion
backing
Hydrogen gas from
serpintine flow field
finds a pathway to
catalyst layer
Pathway of
hydrogen ion
conduction
Oxygen gas from
air in serpintine flow
field finds a pathway
to catalyst layer
Pathway of water
from catalyst layer
Carbon nanoparticles
Platinum catalyst
Pathways of electron
conduction

PEM fuel cell scheme

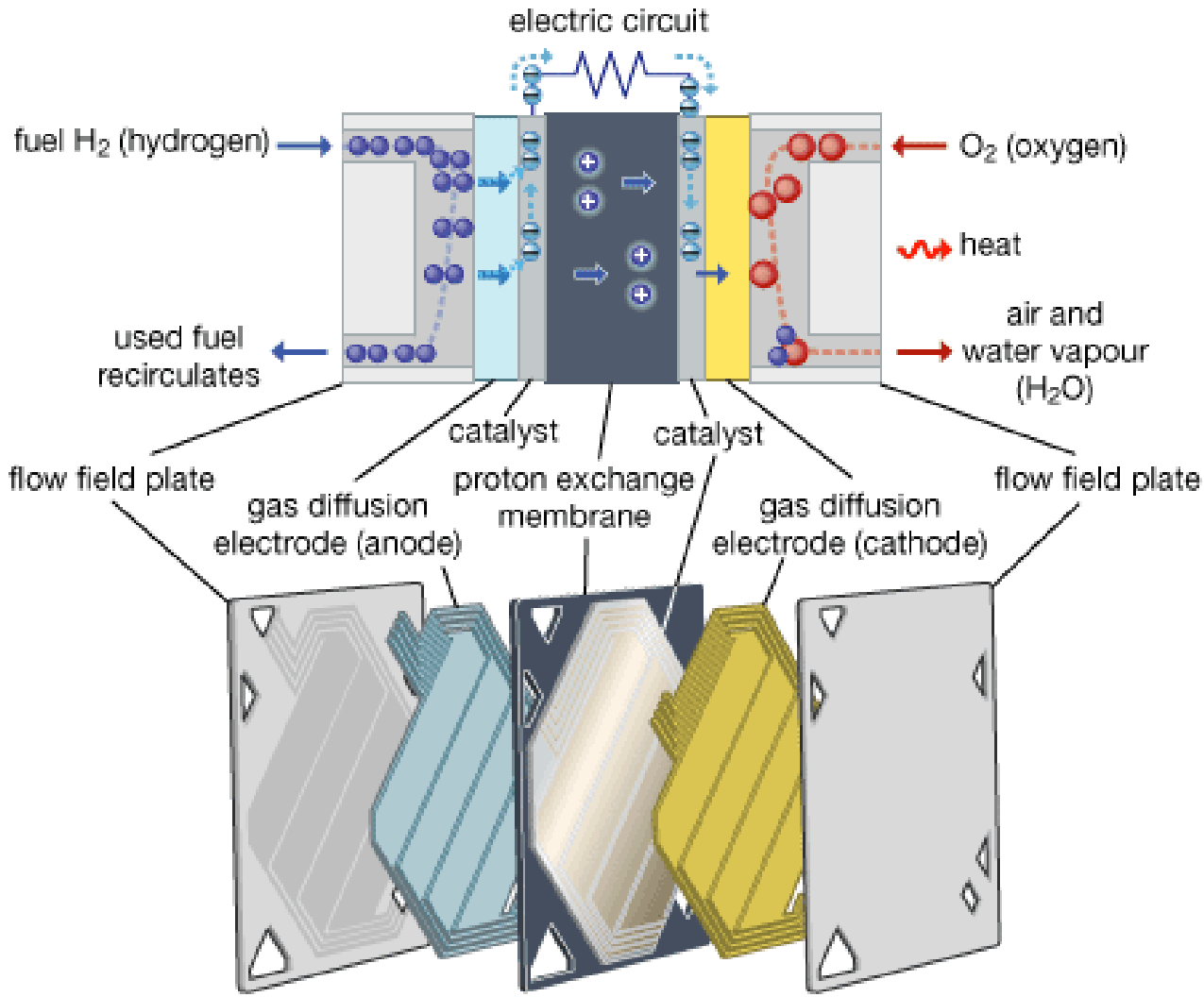

Protons (ions H^+) are transferred thanks to sulphonic groups $SO_3^=$ in the membrane structure, which act as "bridges" in promoting the passage of protons.

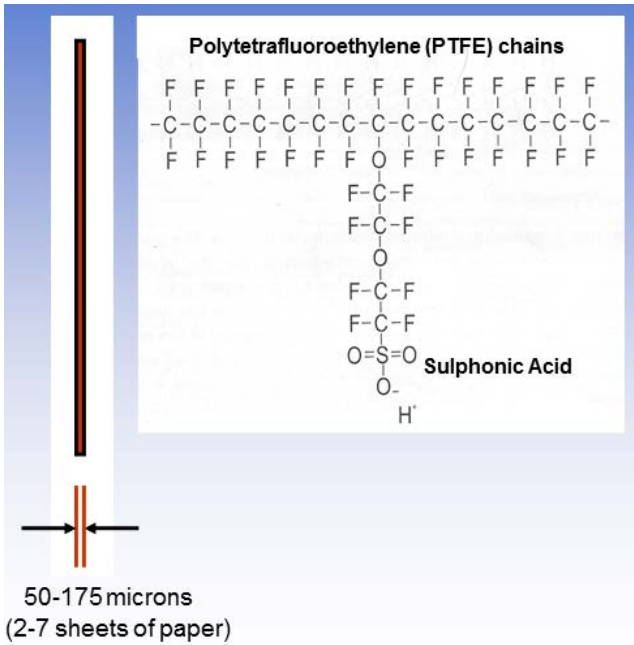

PEM fuel cell reactions

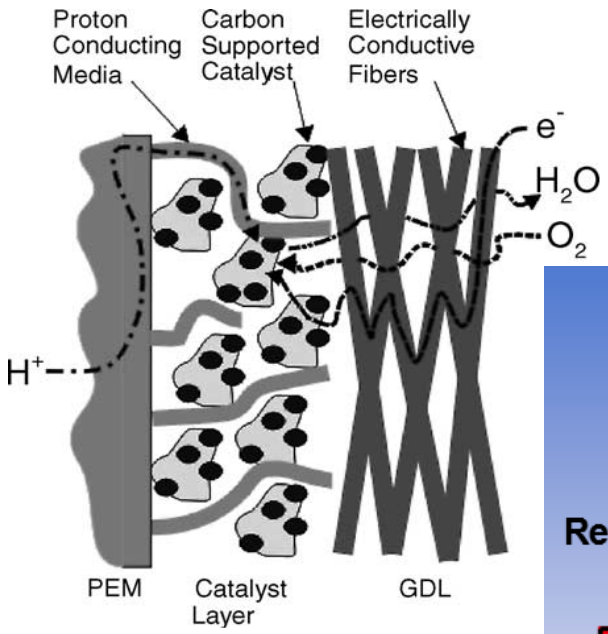

Reactions occur at the triple phase (electrode-electrolyte-gas) boundary

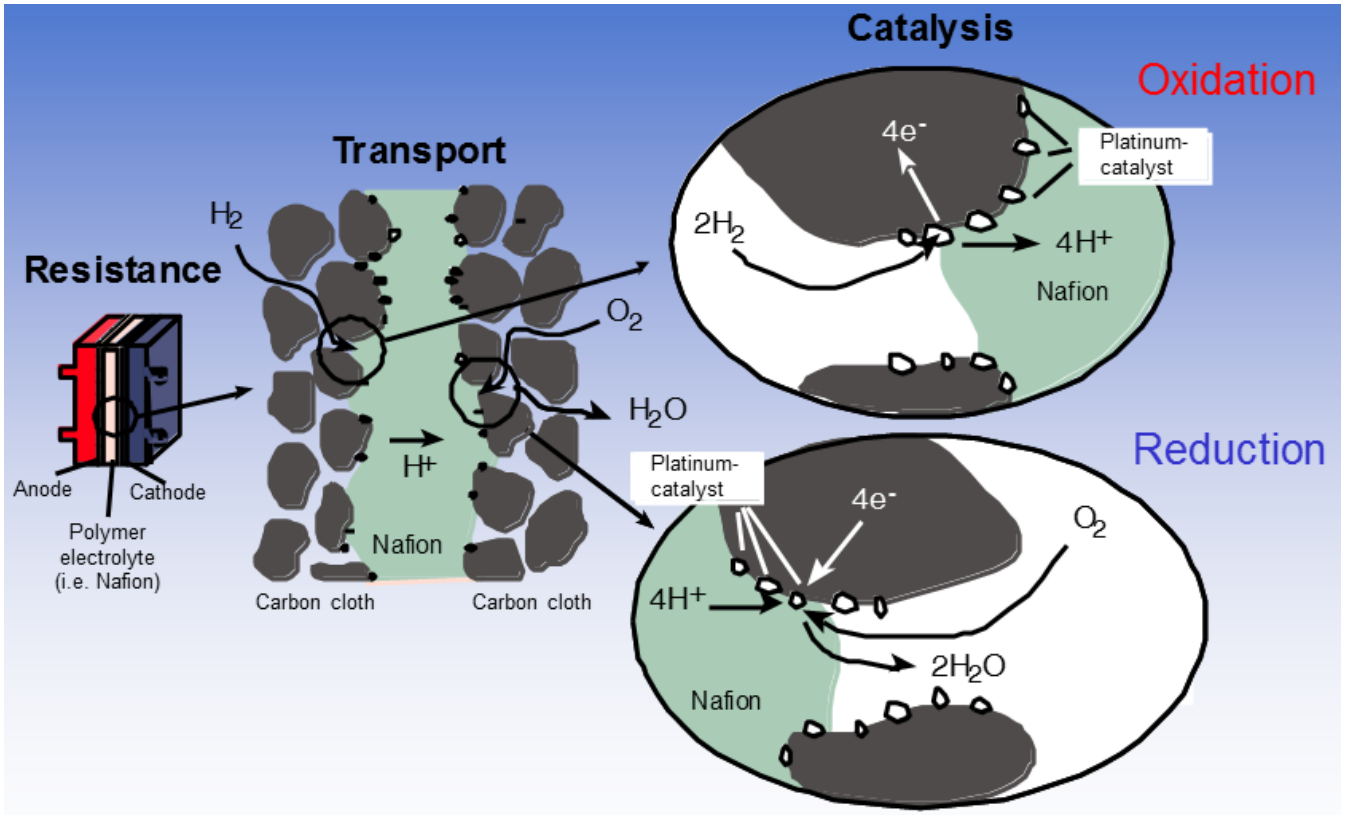

PEM applications

- Applications for transport (<u>high power density</u>, up to ≈ 2* kW/kg and kW/dm^3 for the stack, * 0.65-1 for the complete FC system) and stationary UPS and CHP units.
- Efficiency up to 40% with NG fuel processor; up to 55-60% with direct H_2 fuel (>60% at partial loads); stationary applications 1 ÷ 250 kW

Above: mobile applications Nuvera, Ballard Power Systems @70-100 kW (Italia, USA), portable Horizon FC @ 50 W; below: PlugPower systems @ 5kW (USA), Nedstack @ 1000 kW (NL), Ebara-ballard @1 kW (Japan)

Recent proposals of FC vehicles

Toyota Mirai

- Stack PEM , 114 kW (153 CV), power density 3.1 kW/L or 2.0 kW/kg. Based on 370 cell stack (thickness 1.34 mm , 102 g/cell).
- Two tanks , total 5 kg H_2 @ 700 bar (gross weight of the tanks 87.5 kg, structure in reinforced polymers with carbon fiber). Driving range 500 km.
- With NiMH battery storage for braking energy recovery
- Can export electricity to the grid in case of black-out

Hyundai Tucson (ix-35)

- Stack PEM , 100 kW (136 CV).
- Two tanks , total 5.6 kg H_2 @ 700 bar, structure in reinforced polymers with carbon fiber. Driving range 600 km.

Recent proposals of FC vehicles

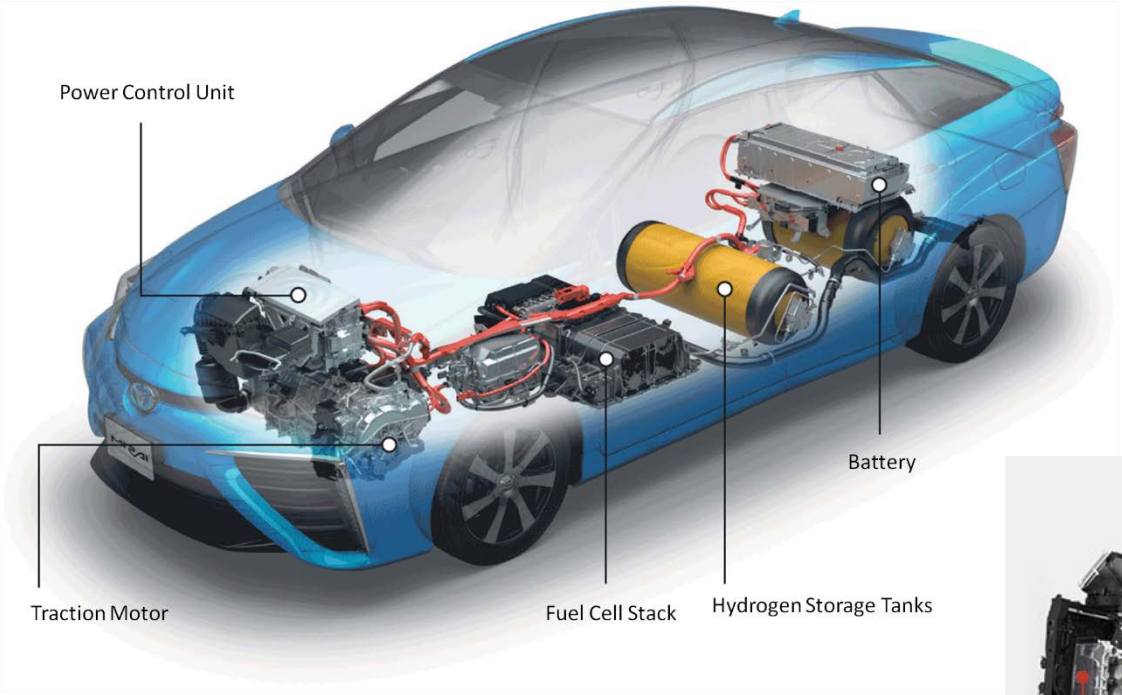

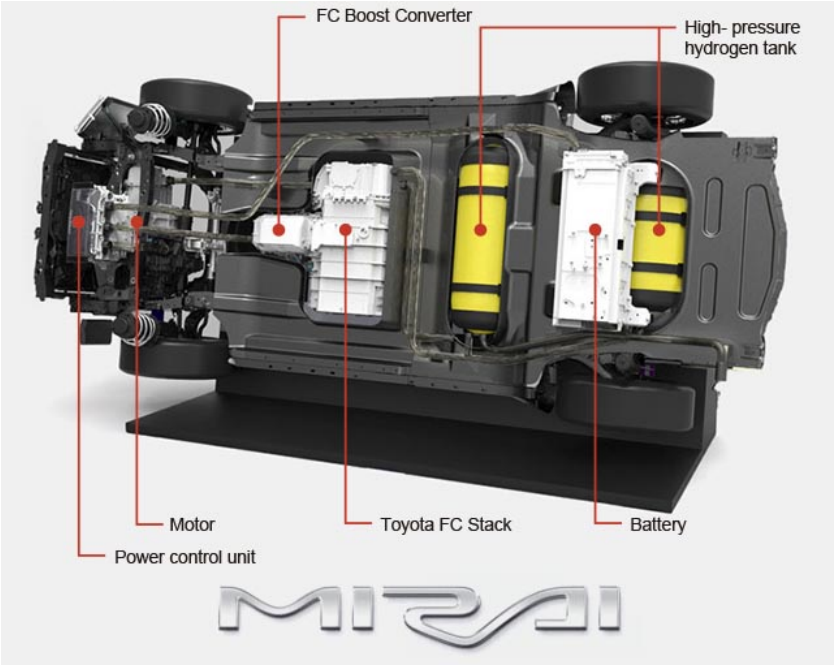

Examples of PEM FC for stationary use

2 MW plant using byproduct hydrogen from a chlor-alkali process (www.demcopem-2mw.eu); PEM FCs provided by Nedstack (NL)

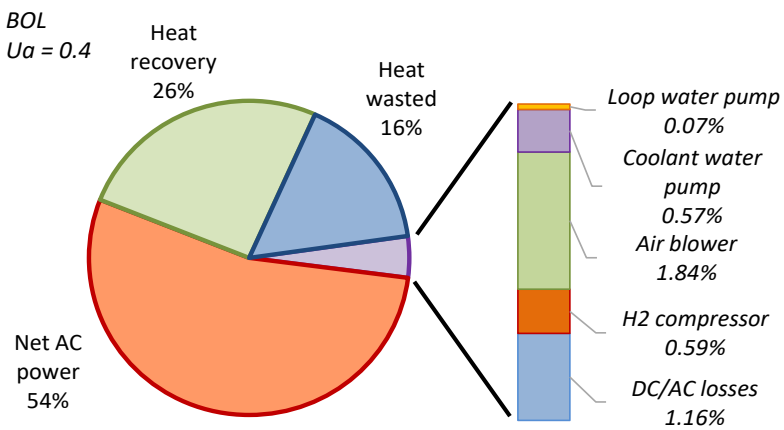

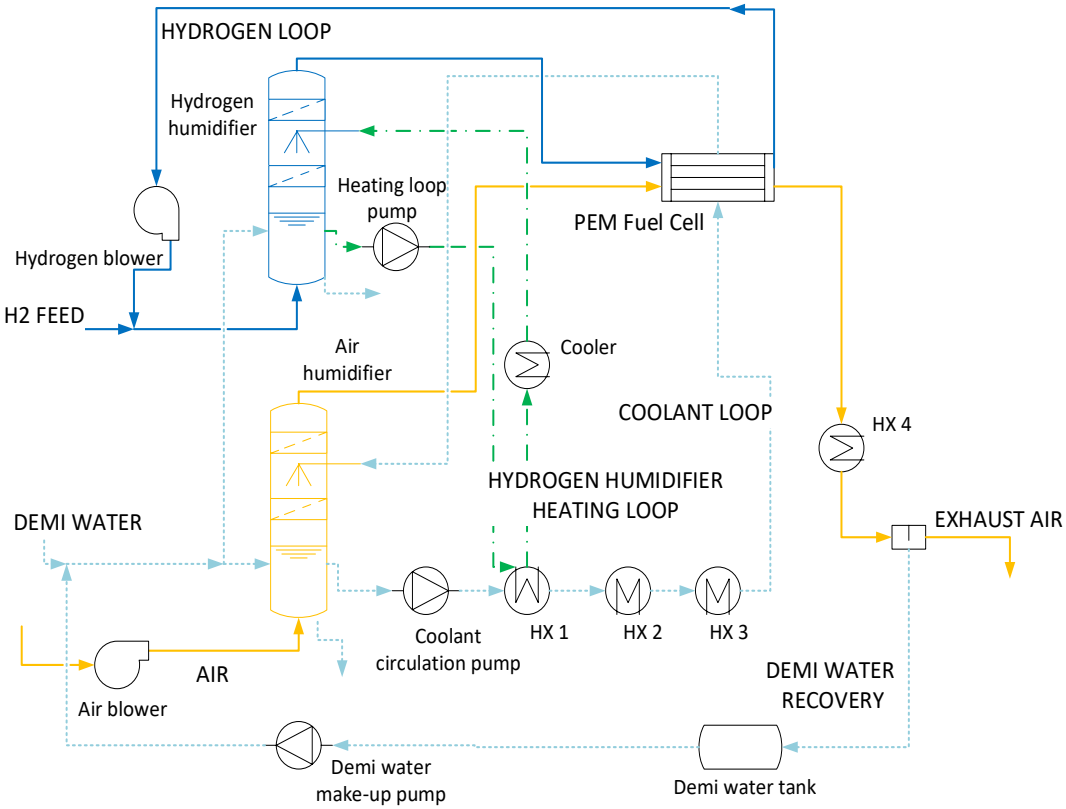

2 MW plant conceptual layout and energy balances

Other examples of PEM FC

Avista 1 kW modules for UPS / backup power

Nuvera modules for forklift applications

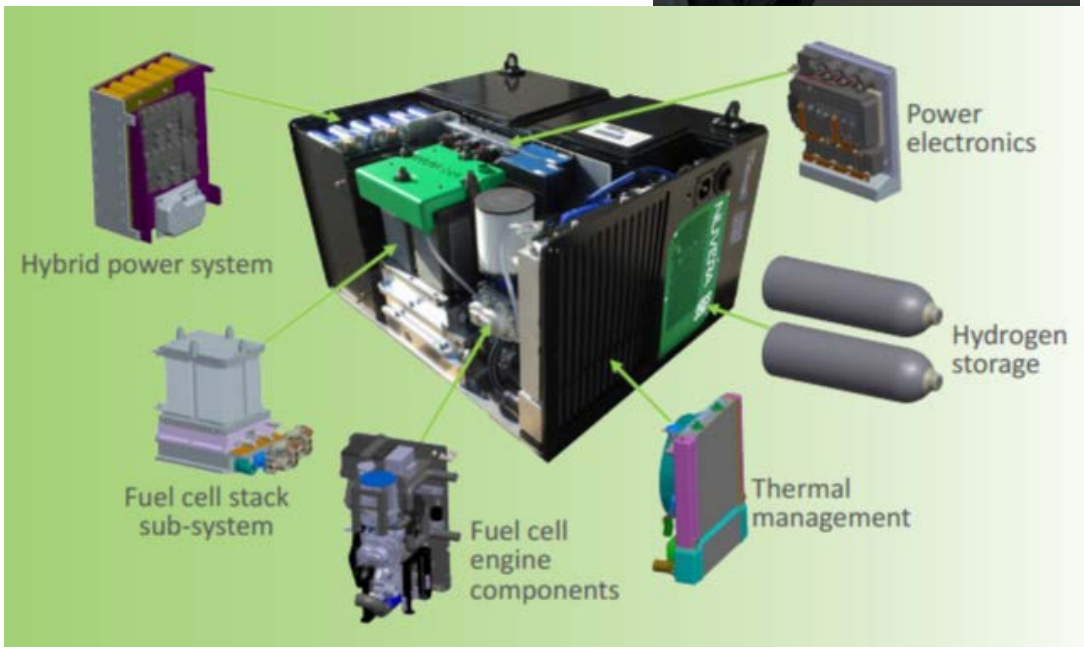

Module Ebara-Ballard , 1.3 kW for domestic use, with heat recovery, water tank and NG reformer (Tokyo Gas) ; over 1000 unit under test (Japan).

Example of R&D demo projects

	European Virtual Fuel Cell Power Plant	DoE-FE-DoD	Ene-Farm	Ene-Field	Callux
Region	Germany, Spain, Portugal, Netherlands	United States	Japan	Europe	Germany
FC technology provider	Vaillant Plug Power	Plug Power Nuvera	Panasonic, Toshiba + various	Various	Baxi Innotech, Hexis, Vaillant
FC type	PEM	PEM	PEM & SOFC	PEM & SOFC	PEM & SOFC
Fuel	NG	NG-C3H8-H2	NG	NG	NG
Electr. nom. Power (kWe)	4,6	5	0.75	Tbd	1
Therm. nom. Power (kWth)	9	2-9	1	tbd	2
N° installed	31	27	>**40000**	1000 (target)	305 (800 target)
Operational period	Jan.2004 – May.2005	Oct.2003 – May.2007	April 2006 – ongoing	2012 - ongoing	2007 - ongoing

Example of cogenerative plant with NG fuelled PEM

- Heat is recovered from the reformer, from exhaust gases and a cooling circuit (ex. Production of hot water at T ≅ 65°C)
- High water content in the exhaust gases (H2 oxidation, air humidification)

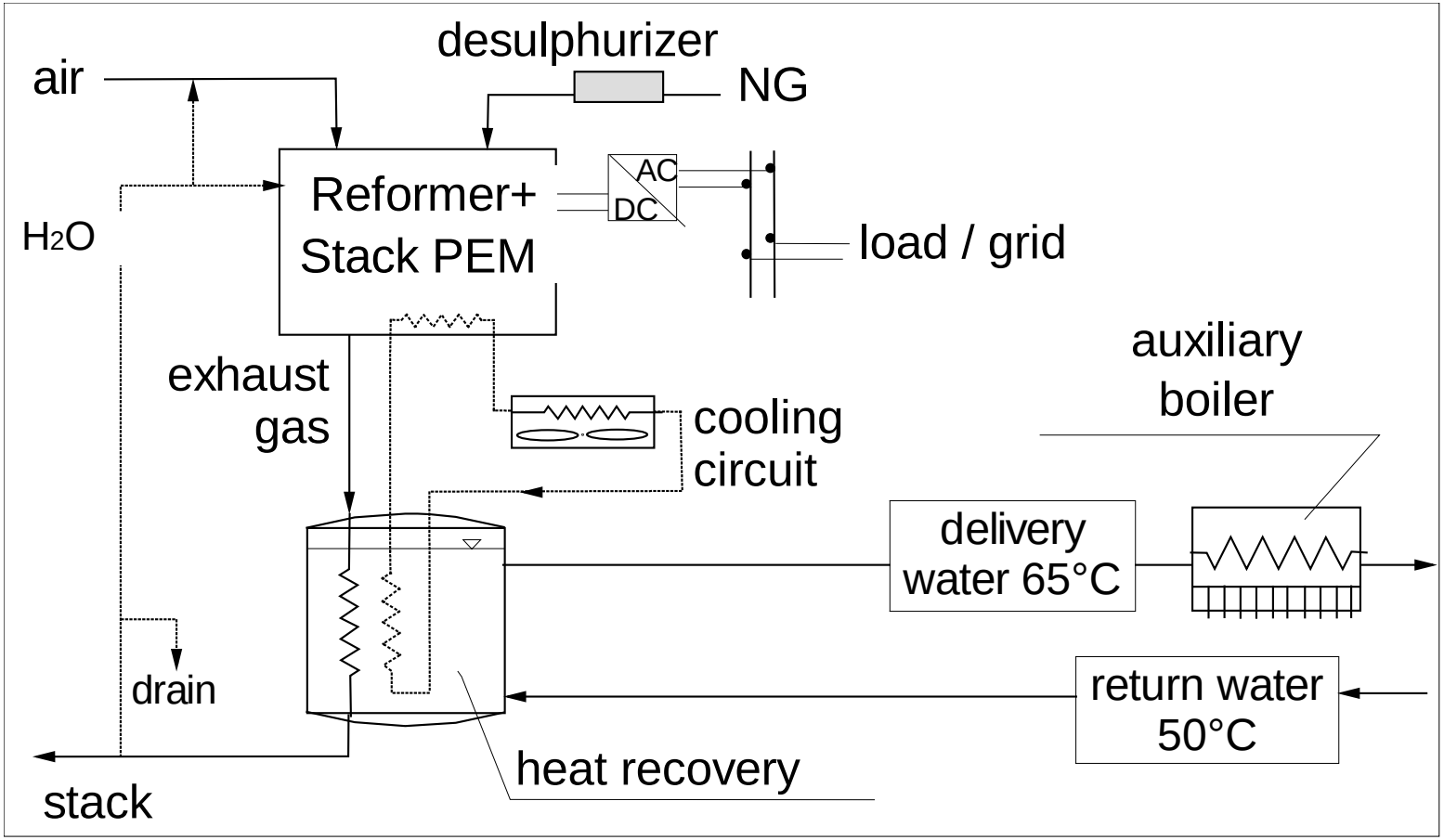

Example of PEM application on submarines

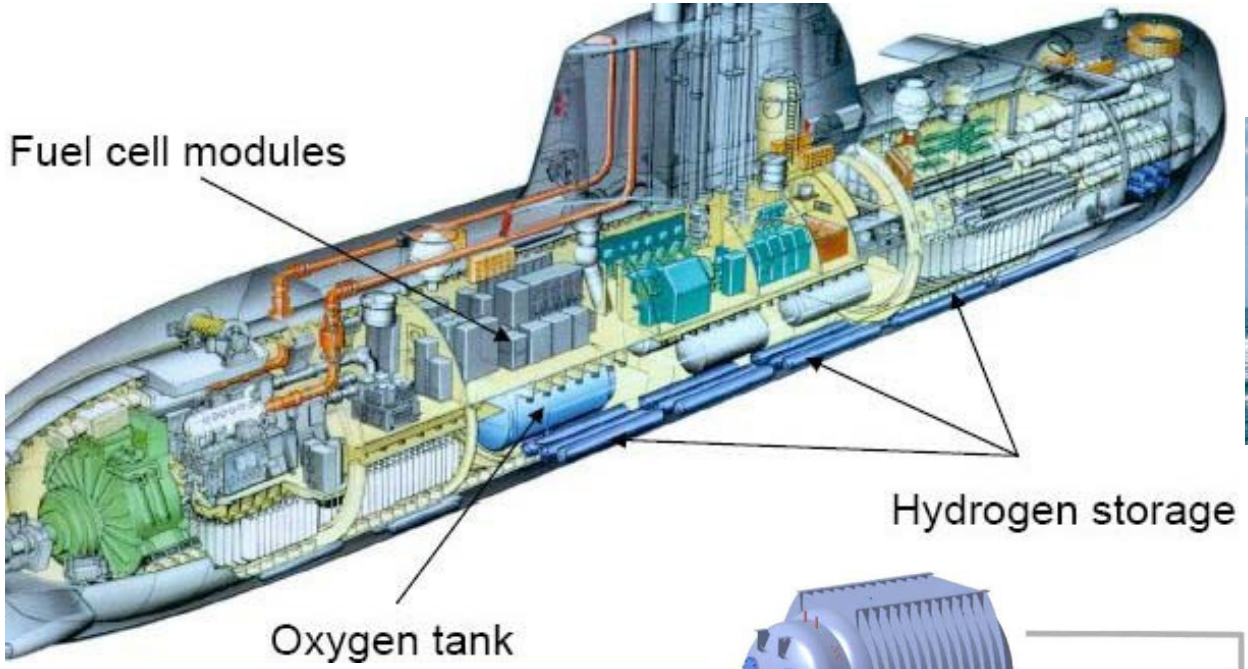

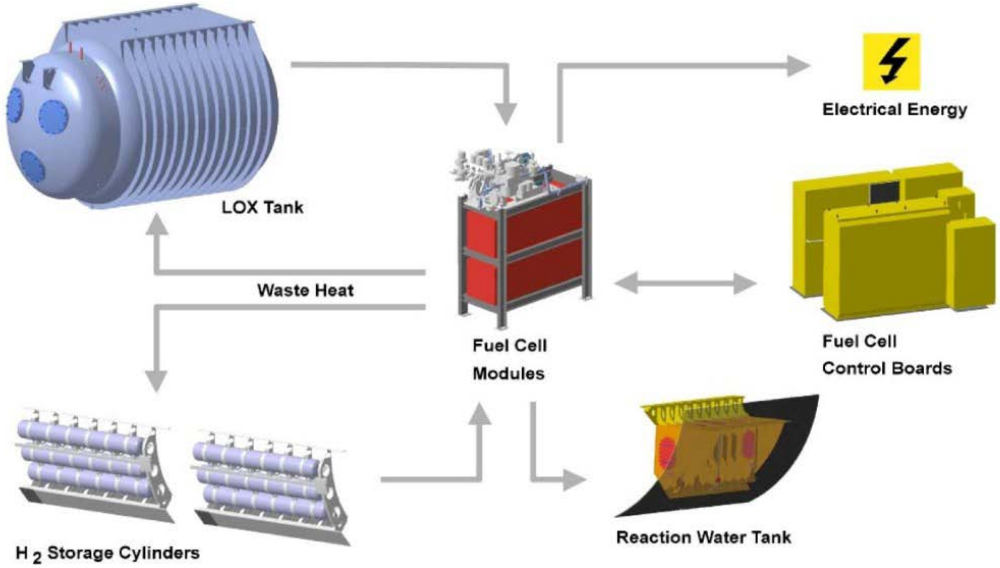

Applied on recent submarines classes U212A (Germany) and Todaro (Italy);
PEM power 300 kW, rated for AIP propulsion up to 14 days.
Reactants H_2-O_2, electrical efficiency ≅70%

LT fuel cells: polymeric type DMFC

- DMFC with direct feeding of methanol (CH3OH; ***Direct Methanol FC)***

At the anode is fed a mixture of water and methanol (generally diluted at 5-10% methanol) which reacts generating CO_2 and protons H+; the latter, permeating the mambrane, react at the cathode with oxygen yielding water. The unreacted fuel and part of water are recycled.

$$\text{Anode: } CH_3OH(l) + H_2O(l) \rightarrow CO_2(g) + 6H^+(g) + 6e^-$$

$$\text{Cathode: } 6H^+(g) + 6e- + 3/2O_2(g) \rightarrow 3H_2O(l)$$

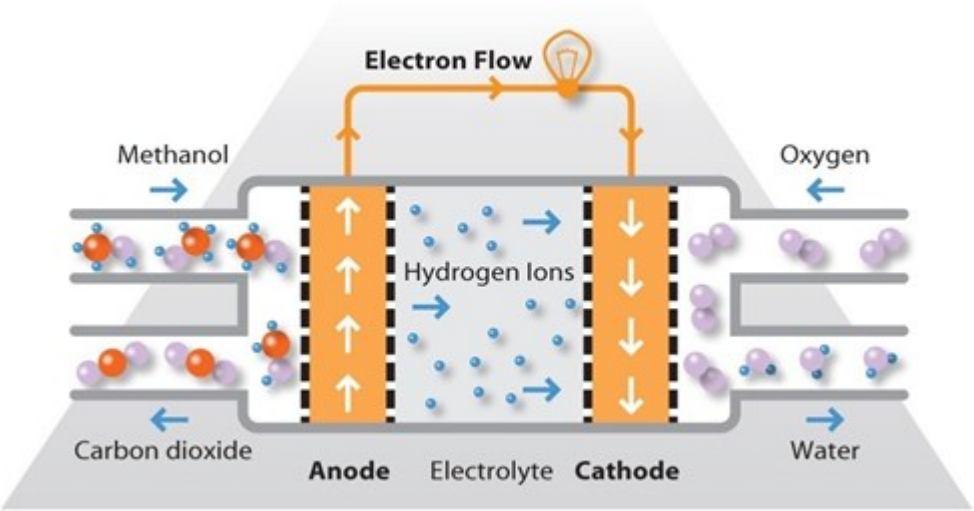

LT fuel cells: polymeric type DMFC

- limited efficiency (V_{max}=0.3-0.4V @ 200 mA/cm^2; η_{el} < 20-25%)
- portable applications (consumer electronics); future applications for vehicles?

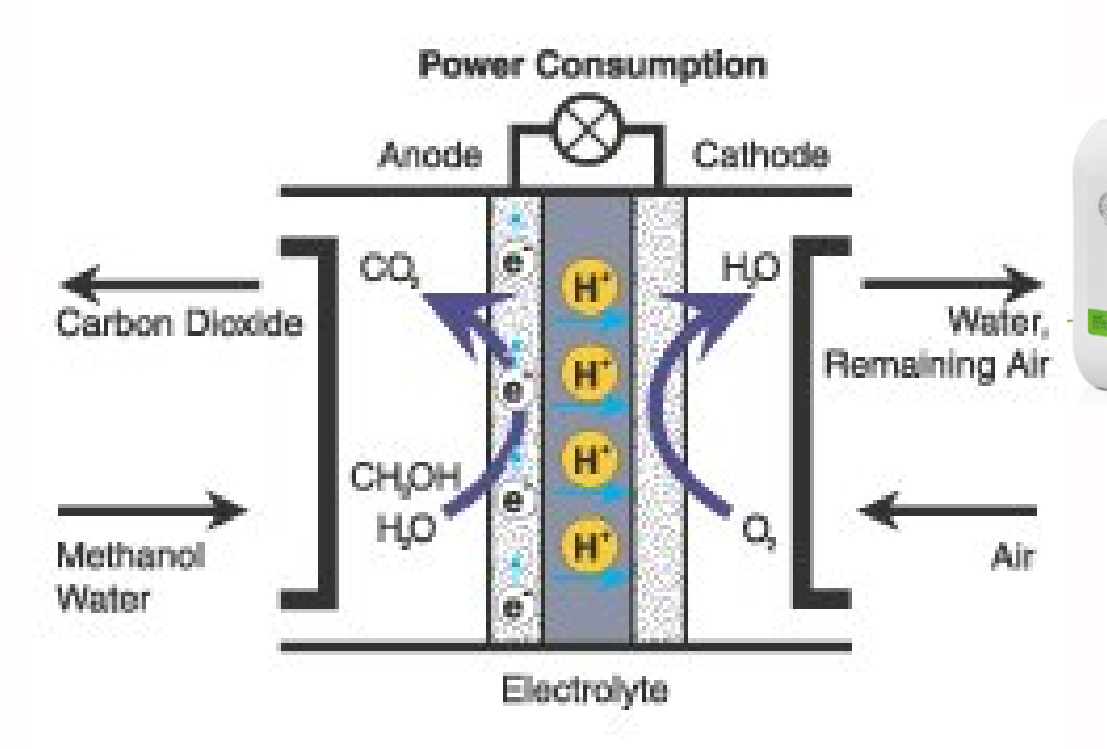

Portable applications (SFC Efoy, 105W @ 12 V , fuel consumption 0.9 l/kWh; prototypes from Toshiba and (below) Samsung @1800W, 3.5 kg).

LT fuel cells: polymeric type DMFC

- Despite recent development and still open critical issues, DMFCs are close to commercial application , especially for feeding portable electronic devices (1-50 W ; cell phones, PDA, cameras, laptop PCs,..).

- Performances and costs (about 40 €/W) suggest a possible market entry with future target costs at 3-5 €/W.

- Other possible market are UPS systems (Uninterruptible Power Supply unit), in the 500 W-5 kW range, in competition with PEM FCs and conventional batteries.

LT fuel cells: high temperature PEM (HT-PEMFC)

The **HT-PEMFC** (120 °C–200 °C) is a variant of PEM, using polybenzimidazole (PBI) doped polymeric membranes with phosphoric acid (PBI/H_3PO_4) as electrolyte and efficient proton conducting membrane. The conduction mechanism is similar to the case of PAFC (see in the following)

The HT-PEM is able to overcome some of the issues affecting PEM:

- systems are able to operate without humidification
- work with lower Pt catalyst loading
- tolerate impure fuel streams (at operating temperatures above 150 °C, the affinity of Pt for CO is reduced → CO tolerance up to 1-3%)
- the higher temperature waste heat can be easily utilised for other processes (e.g. CHP)

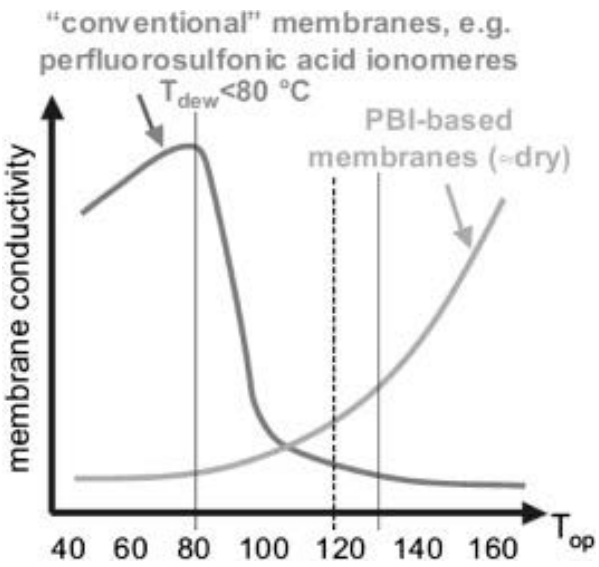

Main drawback with respect to LT-PEM is the operation with lower current densities (lower power density), in addition to issues with durability and degradation (R&D ongoing).

LT FCs: AFC (Alkaline Fuel Cell)

KOH	$2e^- + 2H_2O \leftarrow H_2 + 2(OH)^-$	$\longleftarrow OH^-$	$2(OH)^- \leftarrow H_2O + 1/2\ O_2 + 2e^-$	<120°C

•The electrolyte is a water solution of KOH, acting as conductor of ions OH- , with typical concentration 35-50% for cells operating below 120°C.

• Anode and cathode are made of a porous Nickel or carbon base coated with different possible electrocatalysts (Ag, Pt, Au, Pd). Reactions:

$$\begin{cases} O_2 + 2H_2O + 4e^- \rightarrow 4OH^- & \text{(cathode)} \\ H_2 + 2OH^- \rightarrow 2H_2O + 2e^- & \text{(anode)} \end{cases}$$

• Fuel is pure hydrogen (CO acts as a poison). Moreover, alkaline electrolytes (such as NaOH, KOH) easily combine with CO_2:

$$CO_2 + 2OH^- \rightarrow CO_3^{=} + H_2O$$

$\rightarrow$ to avoid carbonizing and blocking the cell, it works preferably with pure O_2 as oxydant.

Invented around 1930, later developed for USA space programs Apollo and Space Shuttle; actually subject of limited R&D activities (reduced calatyst loading; incresased tolerance to CO_2) and few 1-100 kW-scale installations.

LT FCs: phosporic acid (PAFC)

PAFC	$H_2 \rightarrow 2e^- + 2H^+$	$H^+ \longrightarrow$	$2H^+ + 1/2\ O_2 + 2e^- \rightarrow H_2O$	**200°C**

•The electrolyte is a concentrated solution of phosporic acid (H_3PO_4) which acts as conductor of H+ ions (coming from the dissociation H+ / OH- promoted by the acid), for operating temperatures of 150-220°C, resulting also stable.

Component	1965	Current
Anode	Pt/C with bonded PTFE, 9 mg/cm2	Pt/C with bonded e PTFE, 0.25 mg Pt/cm2
Cathode	Pt/C with bonded PTFE, 9 mg/cm2	Pt/C with bonded PTFE, 0.5 mg/cm2
Electrode support	Tantalium, coated with gold	Porous carbon paper
Electrolyte support	glass fiber paper	SiC with bonded PTFE
Electrolyte	85% H3PO4	100% H3PO4

- Limited CO tolerance (adsorbed on anode catalysts), concentration <1-2% in the fuel
- Sulphur compounds (H2S, COS) < 50 ppm in the fuel

LT FCs: phosporic acid (PAFC)

- The only commercial type for a long period (cost of 400 kW modules ≈2000 €/kW)
- Over 350 installed plants (200 kW ÷ 11 MW, total > 60MW), some over 60.000 h of operation
- Efficiency 40% from natural gas; possibility of cogeneration (exhaust gas at 200°C).
- NG feeding, with steam reformer and shift reactors integrated in the package

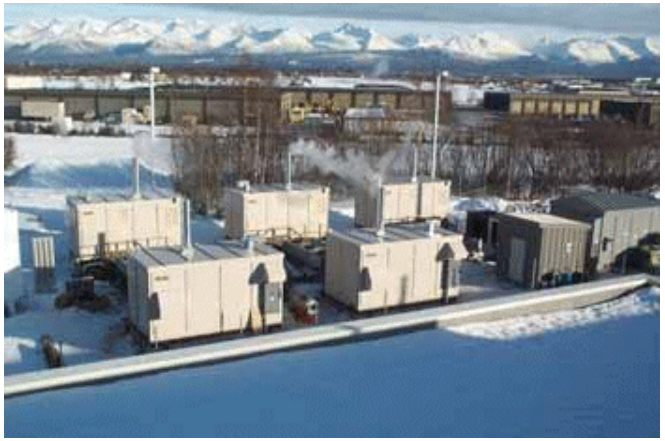

Early PAFC modules by Fuji Electric, UTC power (ONSI / International Fuel Cell, IFC) 100-400 kW (Japan / USA)

PAFC Module by Doosan , 440 kW (Korea-USA)

Example of performances - PAFC

	UTC PC-25
Net electric AC efficiency (LHV)	40%
Power, AC	200 kW_{el} /235 kVA
Nominal power, AC	200 kW_{el}
Thermal power recovered	264 kW @ / 132 kW @120°C
Total efficiency (I law, ref. LHV)	≅87% PCI
Dimensions (LxWxH)	5.4x3.0x3.0 m
Mass	17000 kg
Noise	60 dBA @
Installation	Indoor / outdoor

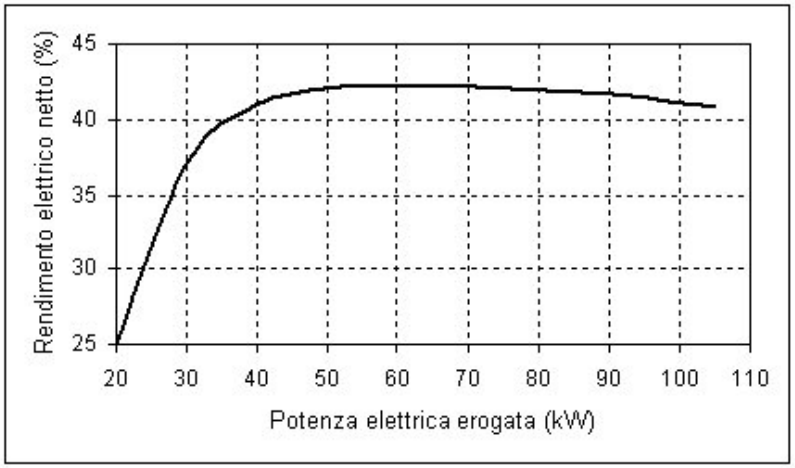

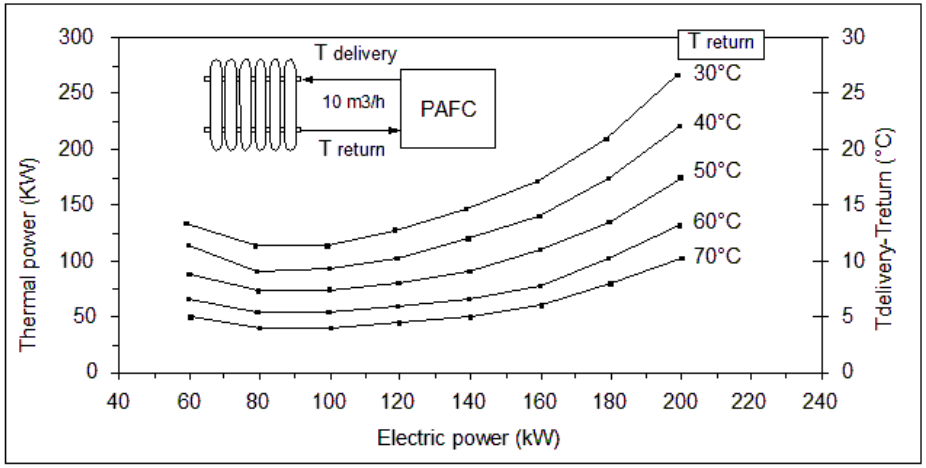

Example of plant functional layout

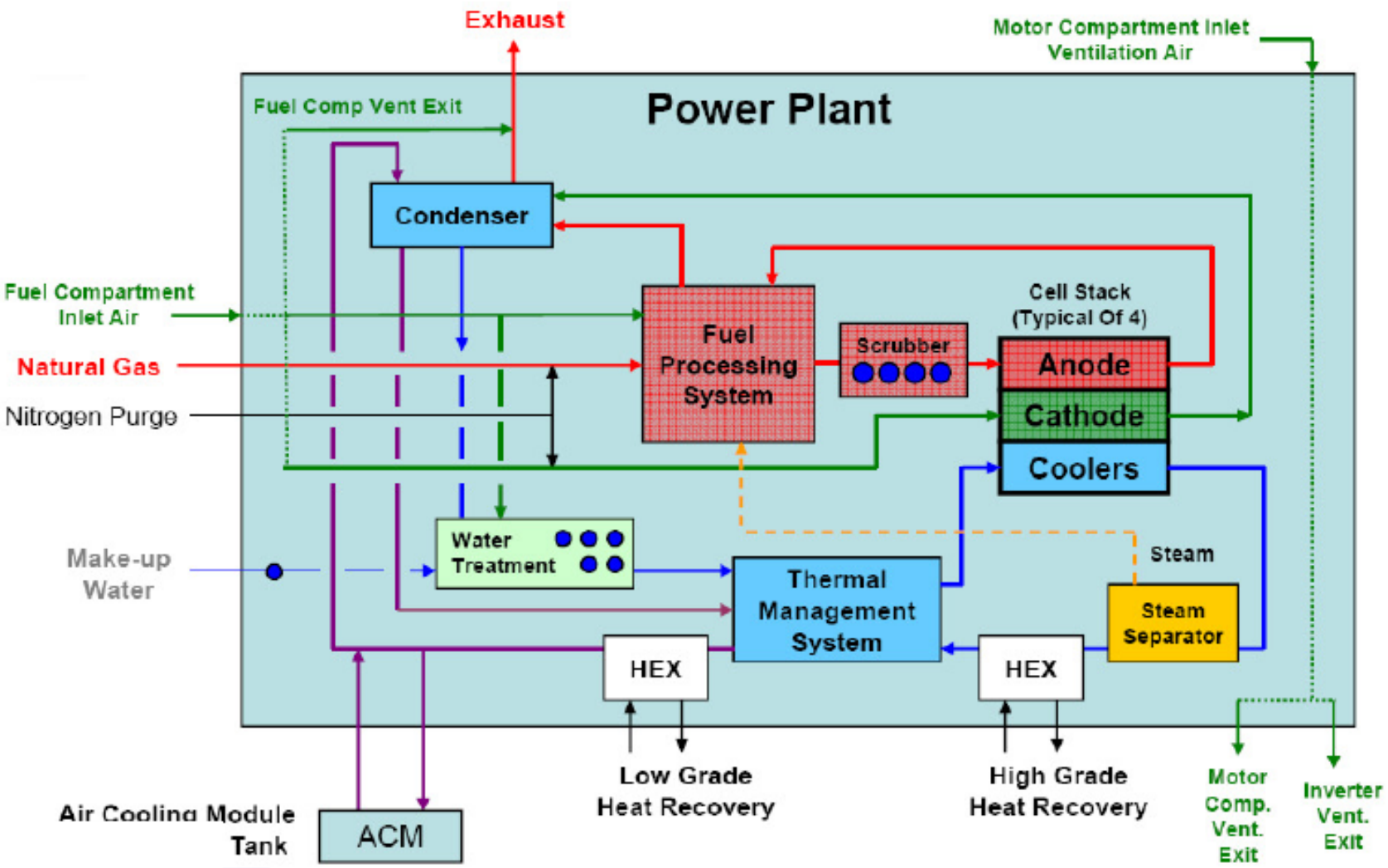

Internal view of a PAFC 400 kW module

Internal view of a PAFC module - II

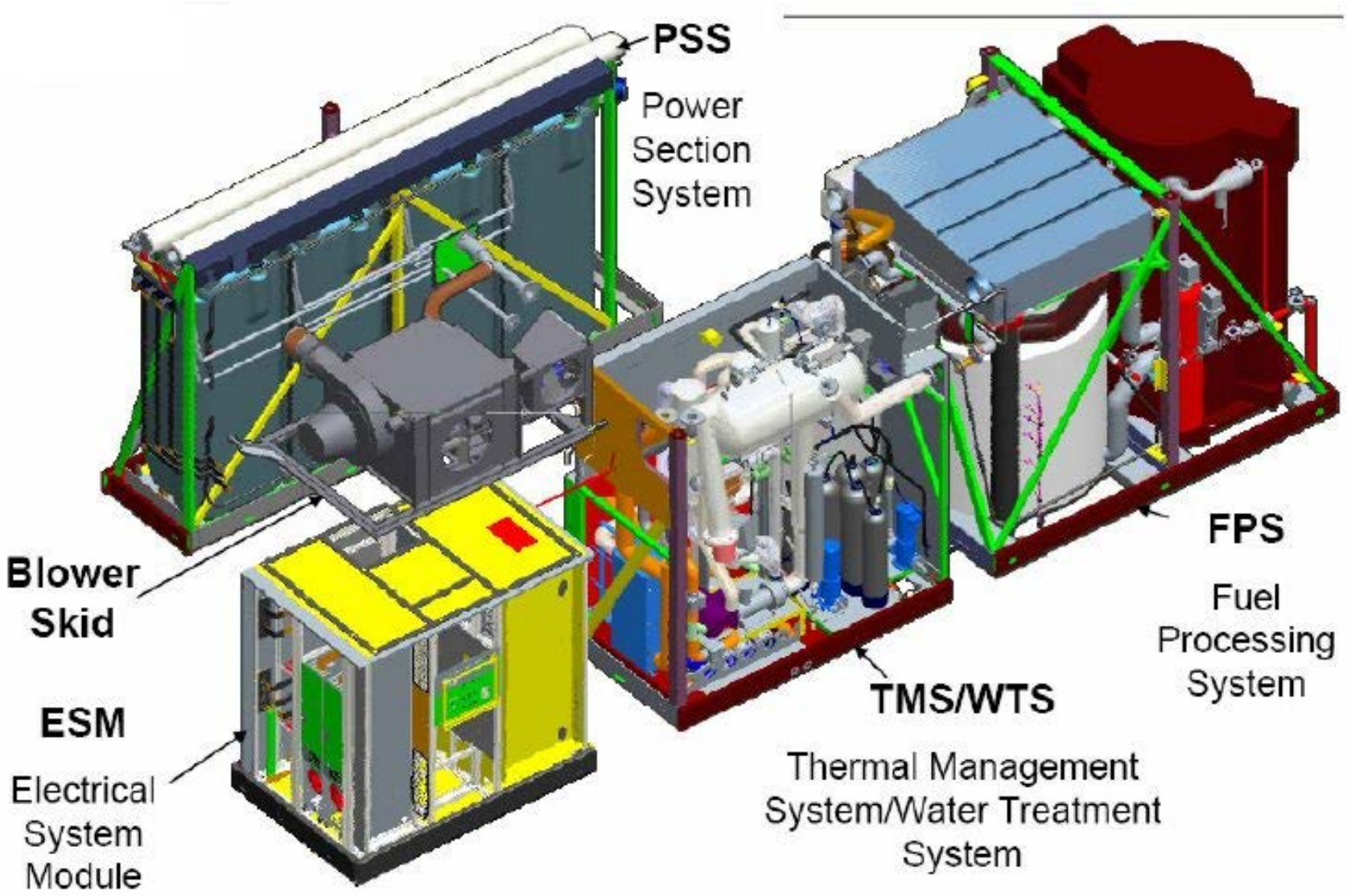

PAFC module typical features

Dimensions	≈1 m^2
Voltage @ atmospheric conditions	P=1 atm 0.75 V a 240 mA/cm^2
Voltage @ pressurized conditions	P=8.2 bar 0.75 V a 430 mA/cm^2
Max power per cell	3.2 kW_{el} (pressurized)
Fuel utilization	85%
Air utilization	50÷70%
Life demonstrated:	65.000 h
Degradation:	2 mV/1000h
Operating pressure:	1÷10 bar

- Availability (~98%) and life extension (over 60.000h in fleet leaders) have reached satisfactory values
- Emissions are extremely low, average NOx < 0.5 ppmvd on existing fleet
- Costs acceptable for niche markets

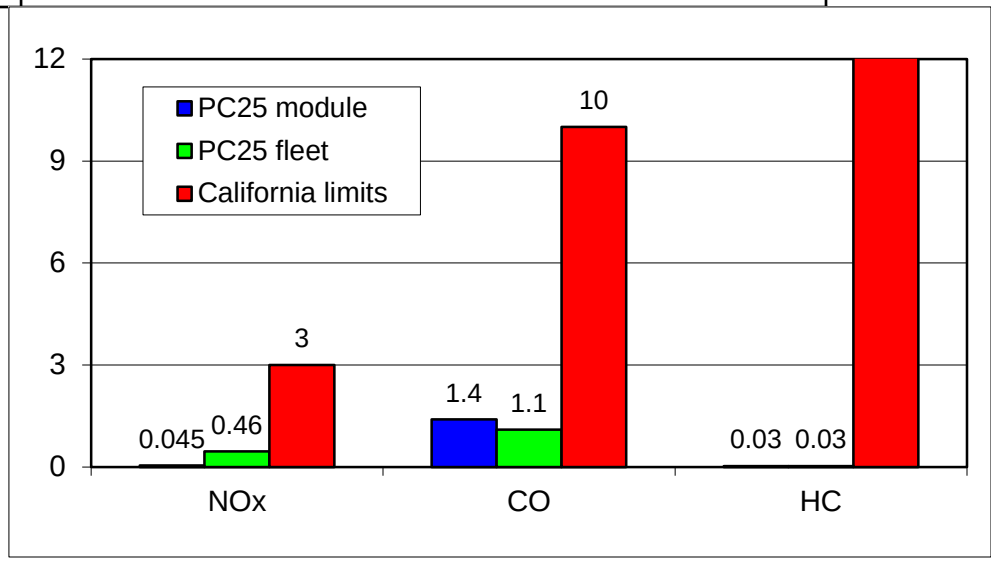

High temperature fuel cells - introduction

Operating at high temperature yields counteracting effects:

(-) lower hydrogen oxidation potential (lower E_{Nernst} for H_2 oxidation)

(+) lower activation losses-electrolyte resistance losses (depending on materials…)

In addition, the high temperature fuel cells offer certain advantages over lower temperature fuel cells, notably:

- the ability to use carbon monoxide as a fuel rather than being poisoned by it
- the ability to “directly” use methane, in particular through internal reforming processes
- the availability of high-grade exhaust heat for combined heat and power (CHP) or combined cycle gas-turbine applications

Molten carbonate FCs (MCFC)

CARBONATE $2e^- + H_2O + CO_2 \leftarrow H_2 + CO_3^=$ | $\longleftarrow CO_3^=$ | $CO_3^= \leftarrow 1/2\ O_2 + CO_2 + 2e^-$ **650°C**

The electrolyte is a mixture of alkaline carbonates (Li,Na,K) entrained in a ceramic matrix in $LiAlO_2$. The cell operates at 600-700°C, where the carbonates are molten in a highly conductive salt, with carbonate ions $CO_3^=$. Global reactions:

$$\begin{cases} H_2 + CO_3^= \rightarrow H_2O + CO_2 + 2e^- & \text{(anode)} \\ 1/2\,O_2 + CO_2 + 2e^- \rightarrow CO_3^= & \text{(cathode)} \end{cases}$$

•The electrochemical reactions taking place in a MCFC yield a CO_2 transport through ions from the oxidant stream to the anode fuel stream.

• It is therefore a common practice to recycle CO_2 from the anode, where it is generated, to the cathode, where it is consumed.

MCFC principles

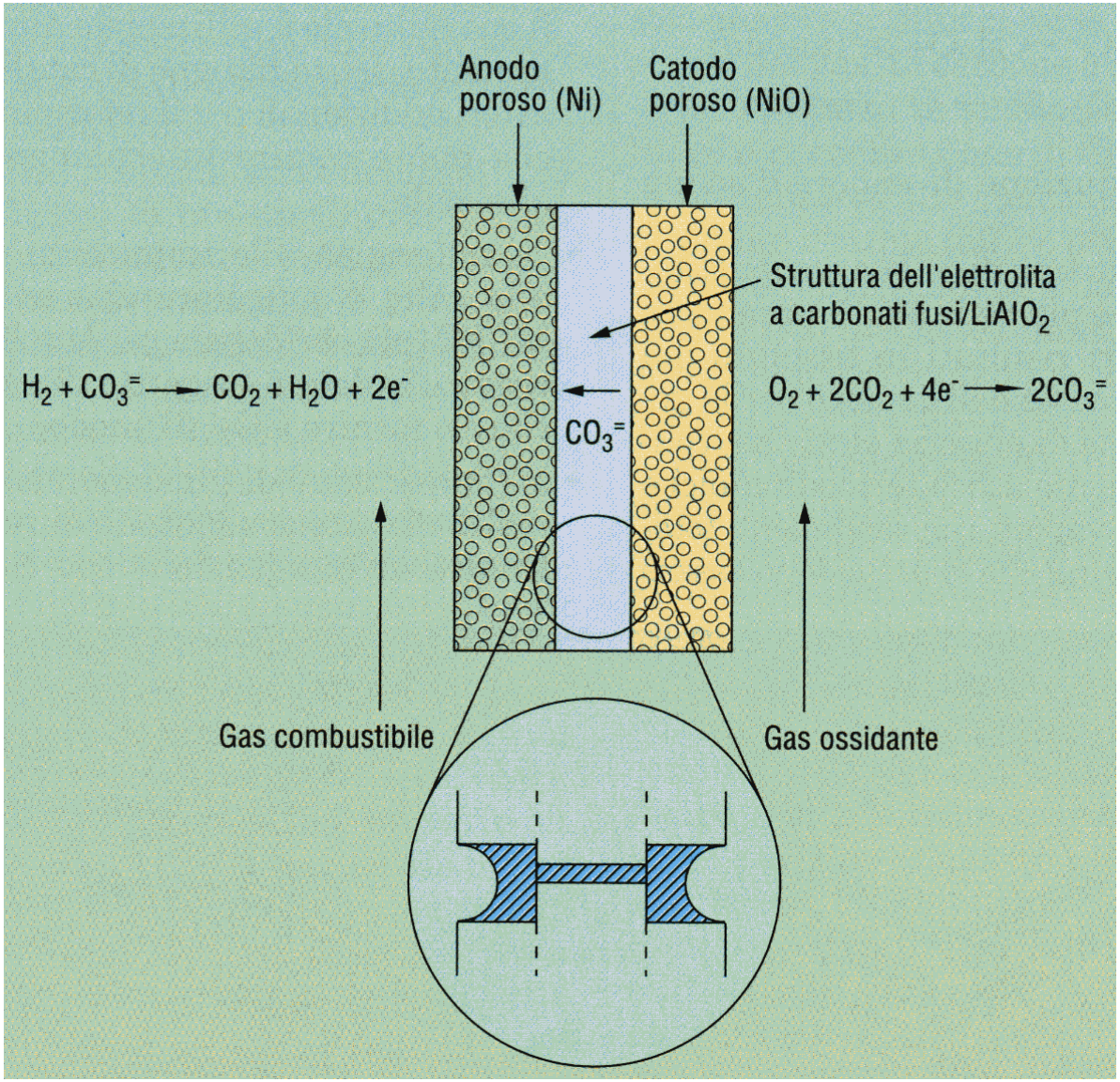

Molten carbonate FCs (MCFC)

Materials used for the manufacture of MCFC components		
Component	1965	Current
anode	Pt, Pd o Ni	Ni-Cr 10% / Ni-Al 0.2-1.5 mm
cathode	Ag2O o NiO+litio	NiO / MgO +Li 0.5-1 mm
Electrolyte support	MgO	γ-$LiAlO_2$ 0.5-1 mm
Electrolyte	52% Li -48% Na 43.5% Li – 31.5% Na – 25% K	62% Li- 38% K o 60% Li- 40% Na 0.5-1 mm

Component	Materials
Anode	Alloy Ni-Cr 10% or Ni-Al, thickness <0.2-1.5 mm
Cathode	NiO / MgO +Li , thickness 0.5-1 mm,
Electrolyte support	γ-$LiAlO_2$, thickness 0.5-1 mm
Electrolyte	Li_2CO_3-K_2CO_3 62%-38%, thickness 0.5-1 mm
Interconnection	Metallic (e.g. Incoloy 825, AISI 316 or 310S) with protective coating

•Typical anode and cathode have a porous structure with 3-6 μm pores (anode) or 7-15 μm pores (cathode).

MCFC - features

Dimensions of a single cell	Up to ≈1 m2
Cell voltage (p atm)	0.75 V @ 200 mA/cm2
Max cell power	1.5 kWel
Fuel utilization	75-85%
CO2 utilization	50%
Experimented life	≈ 40.000 h
Decay	5 mV/1000h
Experimented pressures	1÷10 bar

• Pressurization is beneficial for cell efficiency but reduces the cell life due to cathode corrosion (mainly Ni precipitation). Max current demo plant pressure about 4 bar.

• Sulphur tolerance below 0.5 ppmv (reversible poisoning effects up to 5-10 ppmv at ambient pressure).

MCFC: reforming principles

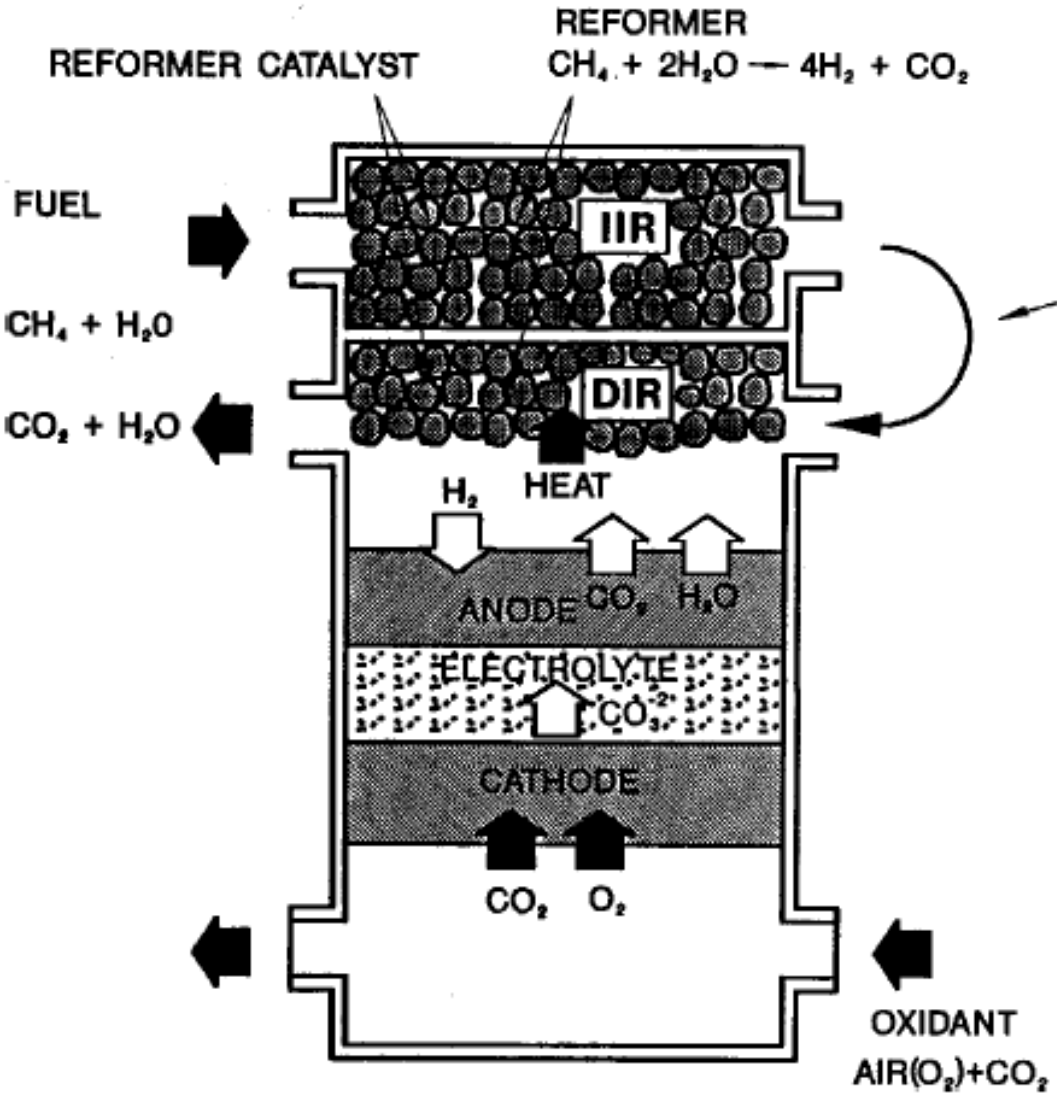

- The FC module is fed with a steam + NG mixture (steam-to-carbon ratio 2.5-4:1, depending on temperature)

- Within the module (in some cases within the stack) it is carried out the refoming reaction (generally IIR) with hydrogen production
- The reaction exploits waste heat from the FC, converted into fuel chemical energy, later converted into electricity, with advantages for the efficiency
- Internal reforming significantly reduce plant complexity avoiding an external fuel processor

Reforming and CH4 conversion

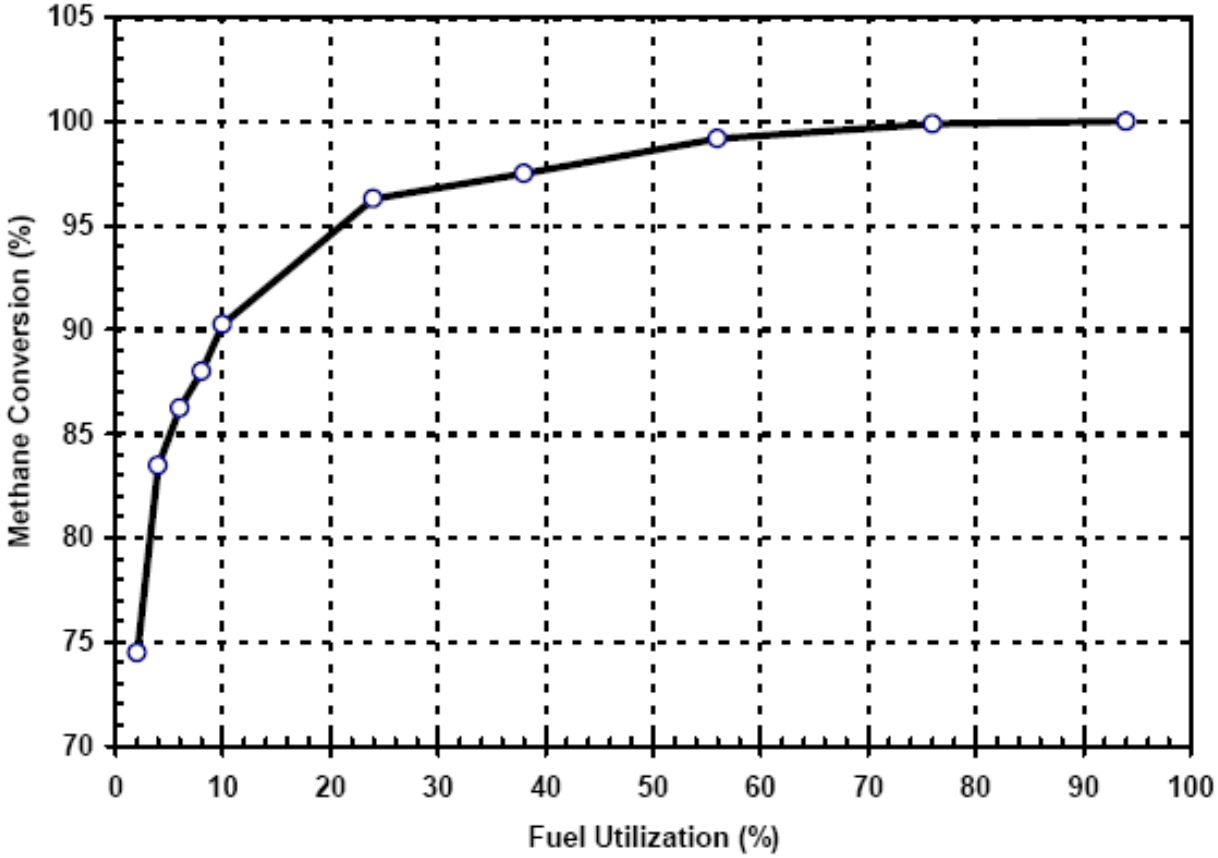

Figure 6-12 CH4 Conversion as a Function of Fuel Utilization in a DIR Fuel Cell (MCFC at 650°C and 1 atm, steam/carbon ratio = 2.0, >99% methane conversion achieved with fuel utilization > 65% (92))

MCFC: examples

- Stationary applications 250 kW ÷ 10 MW
- Possibility of internal reforming and use of NG or hydrogen;
- Efficiency 45 ÷ 50%; possibility of integrated cycles with gas / steam turbines

Demo plants by Fuel Cell Energy, 300 kW-1 MW (USA).

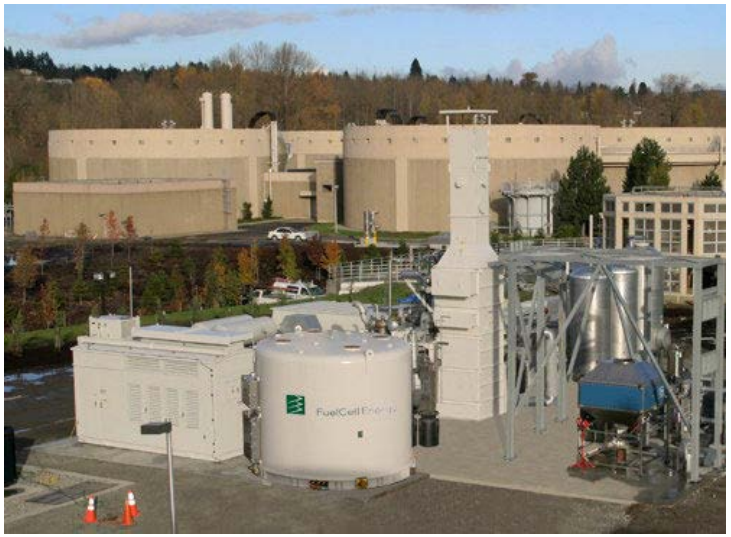

	FCE “DFC300”
Electric efficiency (AC, LHV)	>47%
Electric power, AC	250 kWel
Thermal power recovered	170 kW
Exhaust gas temperature	≈400°C
Total efficiency (LHV)	80%
Package dimensions (WxLxH)	8.5x2.7x3.0 m

- >200 MW (cumulative) “FCE” plants, some applications with biogas from anaerobic digesters (1 MW-class plants)
- Demonstrated availability >96%
- Largest plant @ 60 MW, South Korea

Example of MCFC demo plants

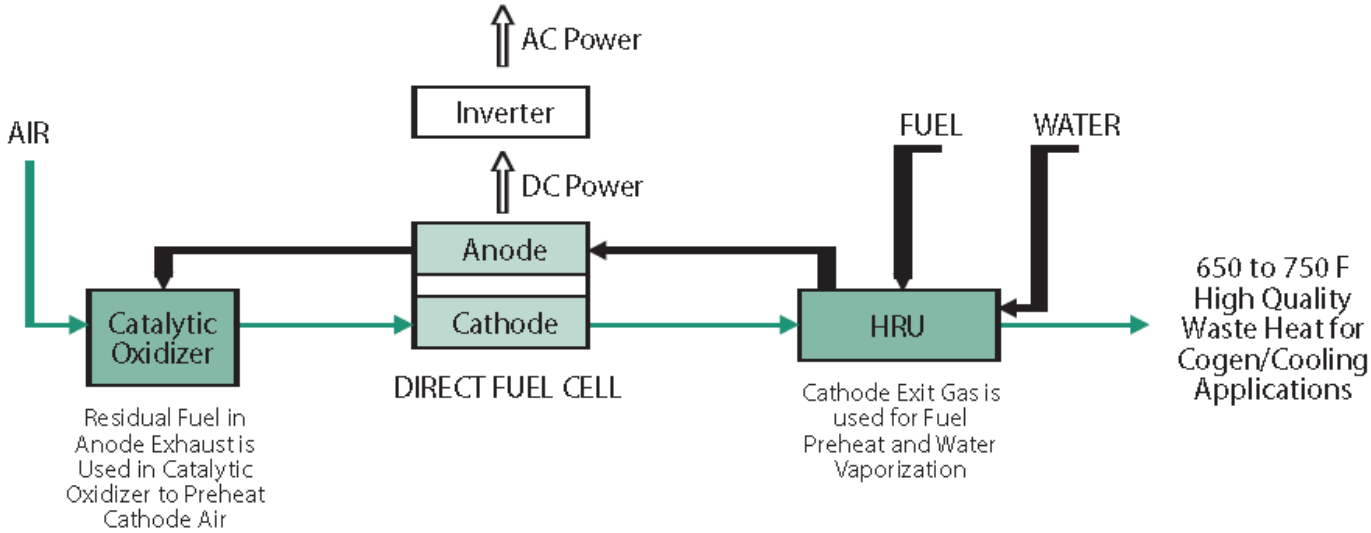

Fuel Cell Energy demo plants 300 kW-1 MW (USA)

MCFC multi-MW power plants

14.9 MW plant, North America

11.2 MW plant,South Korea

58.8 MW plant, Whasung City, Gyeonggi Province,South Korea

Examples of MCFCs - III

- Costs are decreasing, close to 3500 $/kW for best cases (2013-2016).

Santa Rita, 1500 kW

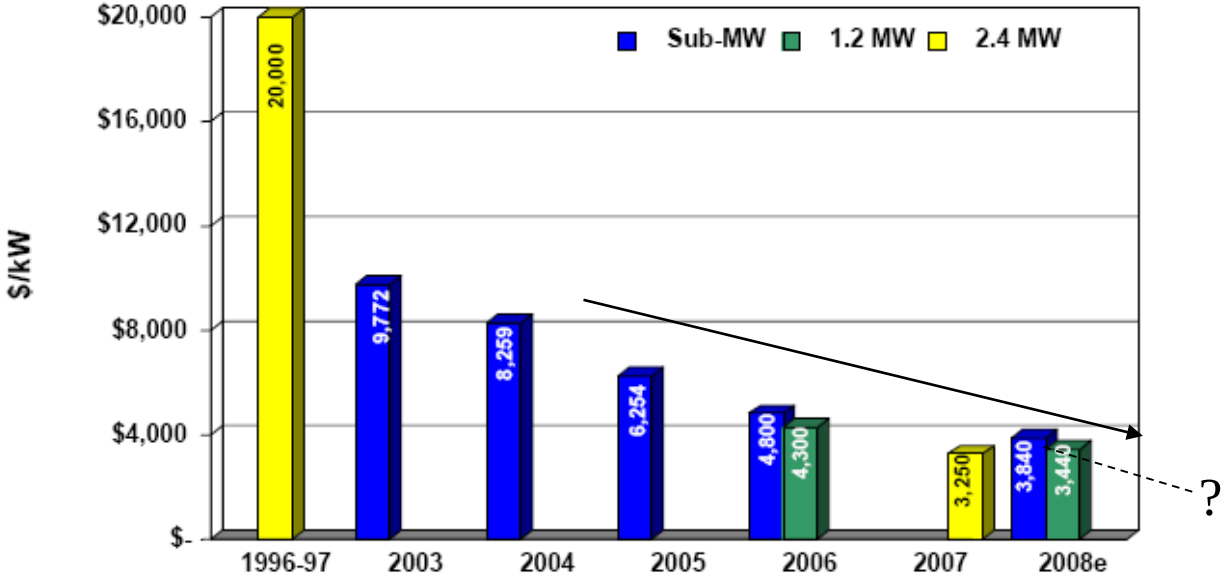

Brewery, CT, 300 kW

San Diego, Hotel, 4x300 kW

New York, Hotel, 300 kW

Danbury, 1500 kW

MCFC: costs and emissions

	Current	Mid-term perspective
Investment cost	3500 €/kW_{el}	< 1000 €/kW_{el}
O&M cost (incl. cell subst)	2.5-4 c€/kWh	1.5 c€/kWh
Life extension	<30.000 h	> 50.000 h
Emissions (@15% O2)	<2 ppmv CO and NO_x	

O&M is inclusive of periodical cell substitution costs. SOx emissions are negligible.

Solid Oxide Fuel Cells

SOFC	$2e^- + H_2O \leftarrow H_2 + O^=$	$\longleftarrow O^=$	$O^= \leftarrow 1/2\ O_2 + 2e^-$	**600-1000°C**

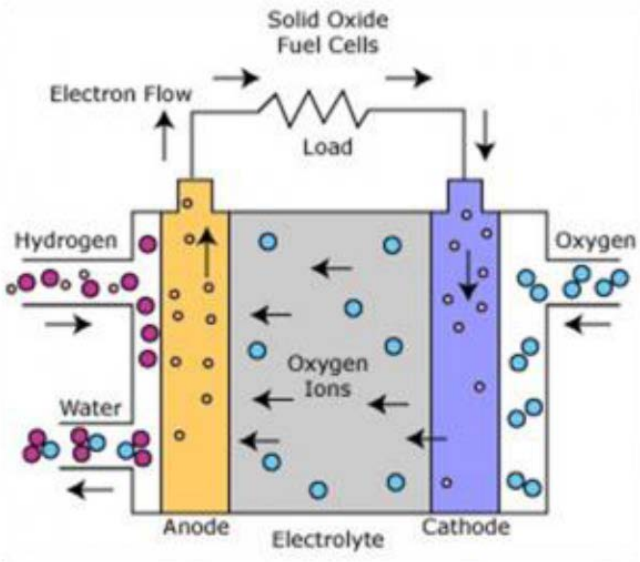

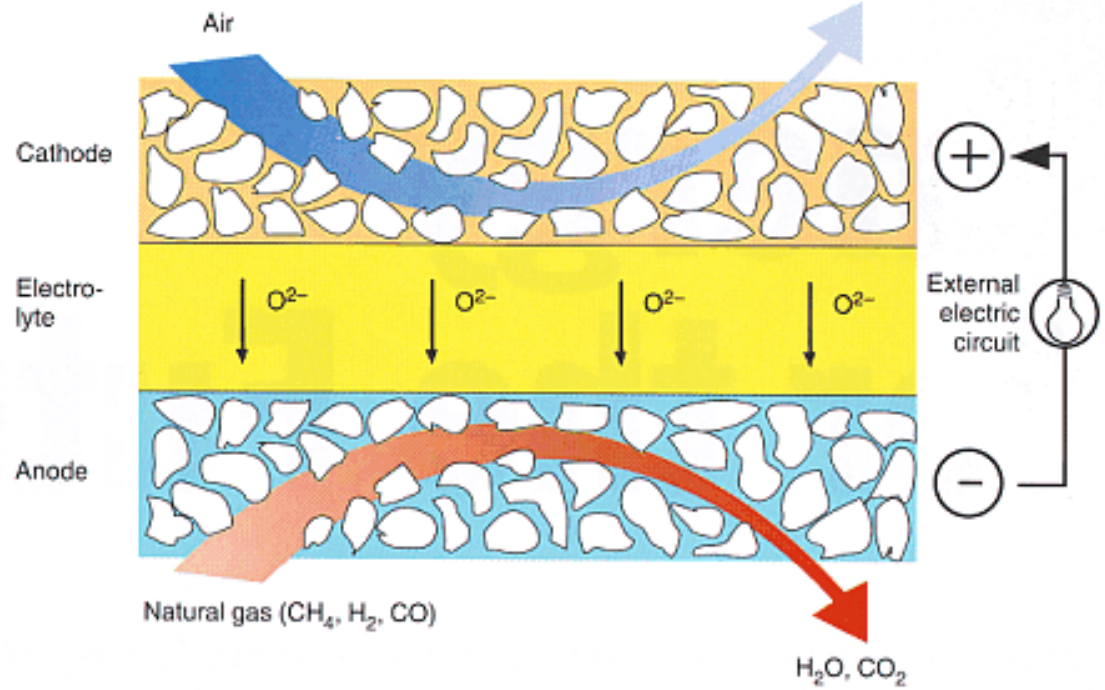

Solid Oxide Fuel Cells

SOFC | $O^{=} \leftarrow 1/2\ O_2 + 2e^-$ | $\longrightarrow O^{=}$ | $2e^- + H_2O \leftarrow H_2 + O^{=}$ | **600-1000°C**

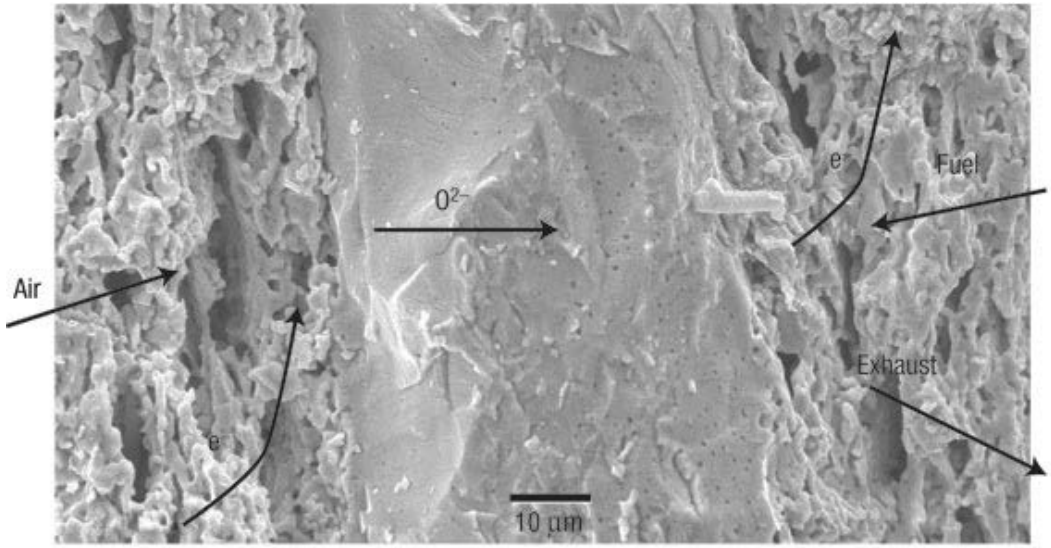

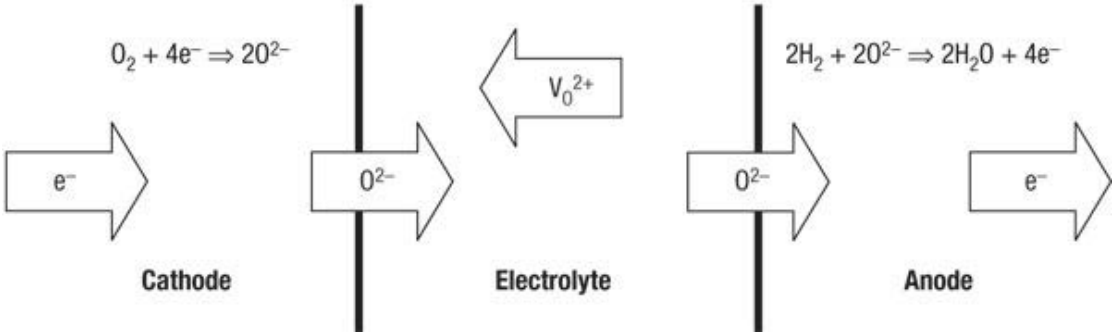

From : Advanced anodes for high-temperature fuel cells, A. Atkinson, S. Barnett, R. J. Gorte, J. T. S. Irvine, A. J. McEvoy, M. Mogensen, S. C. Singhal & J. Vohs, Nature Materials 3, 17 - 27 (2004)

Solid Oxide Fuel Cells principles

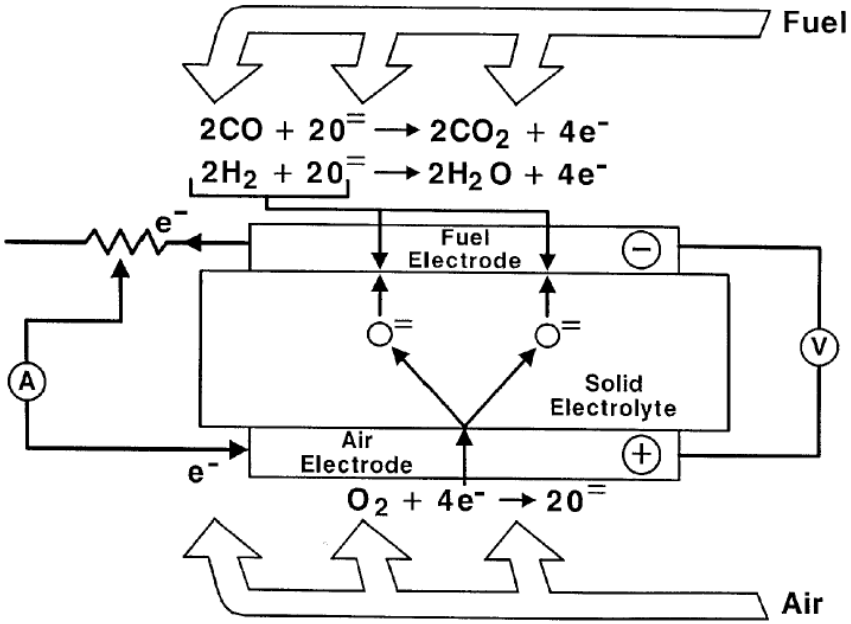

Overall reaction:

$$\begin{cases} H_2 + O^{=} \rightarrow H_2O + 2e^- & \text{(anode)} \\ 1/2\,O_2 + 2e^- \rightarrow O^{=} & \text{(cathode)} \end{cases}$$

Other reactions:

$$\begin{cases} CO + O^{=} \rightarrow CO_2 + 2e^- & \text{(anode)} \\ 1/2\,O_2 + 2e^- \rightarrow O^{=} & \text{(cathode)} \end{cases}$$

Consumption of CO, methane and hydrocarbons:

$CO + H_2O \rightarrow H_2 + CO_2$ (shift; mildly exothermal)

$CH_4 + H_2O \rightarrow 3H_2 + CO$

$C_nH_m + nH_2O \rightarrow (m/2 + n)H_2 + nCO$

(steam reforming, highly endothermal)

- fast reaction kinetics, no requirement of noble material catalysts
- pressurized operation without cell degradation issues

Direct CO / CH4 oxidation vs. WGS/SR conversion

Direct CO / CH4 oxidation is not favored with respect to WGS conversion and H2 oxidation due to several reasons:

- the **driving force** for anodic oxidation of CO and CH4 is lower than that for the oxidation of hydrogen, as reflected in the higher open circuit voltage of the H2 oxidation.
- the **kinetics** of H2 oxidation on the anode are faster than that of CO or CH4 oxidation
- there is vastly more **surface area available** for catalytic reforming and WGS throughout the anode than there is surface area in the three-phase boundary for electrochemical oxidation
- **mass-transfer** of CO, CH4, and even more so of higher hydrocarbons, to the three-phase boundary and through the porous anode is much slower than that of H2, leading to a more significant impact of concentration polarization.

Nevertheless, direct oxidation can be important under certain conditions, such as at the entrance of a cell. The degree to which an anode supports direct oxidation will impact the degree of pre-reforming of the fuel that is required, which typically impacts balance of plant complexity and cost ⇒ strong interest in the development of direct oxidation anodes.

SOFC materials

Operating temperature: 800-1000°C (550÷800°C in IT-SOFC)

Classic materials (T=800-1000°C):

- Electrolyte: ZrO_2 stabilized with Yttrium (8% mol Y_2O_3)
- Air Electrode: Manganite of Ln + Sr (10% mol Sr)
- Fuel Electrode: ZrO_2 / Y_2O_3 + Ni / Co (e.g. 30% mol Ni) "cermet"
- Interconnectons: Chromite of Ln + Mg (10% mol Mg)

✓ The ceramic electrolyte (ZrO_2+ Y_2O_3) transports $O^=$ ions

(lattice structure with doped-induced defects; mechanism similar to semiconductor junctions)

✓ The fuel electrode has:

- mixed electronic (Ni) and oxygen ion (ZrO_2+ Y_2O_3) conduction; a minimum metal proportion in the cermet is necessary for continuity of electronic conduction, whereas the zirconia particles may be non-continuous. $O^=$ mobility enhances the TPB size
- porosity (20-40%)

✓ The air electrode has:

- electronic conduction
- porosity (20-40%)

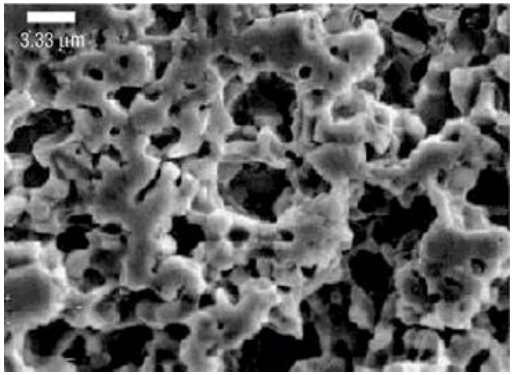

SEM after etching showing zirconia structural skeleton

The concept of reforming, WGS and H2 oxidation

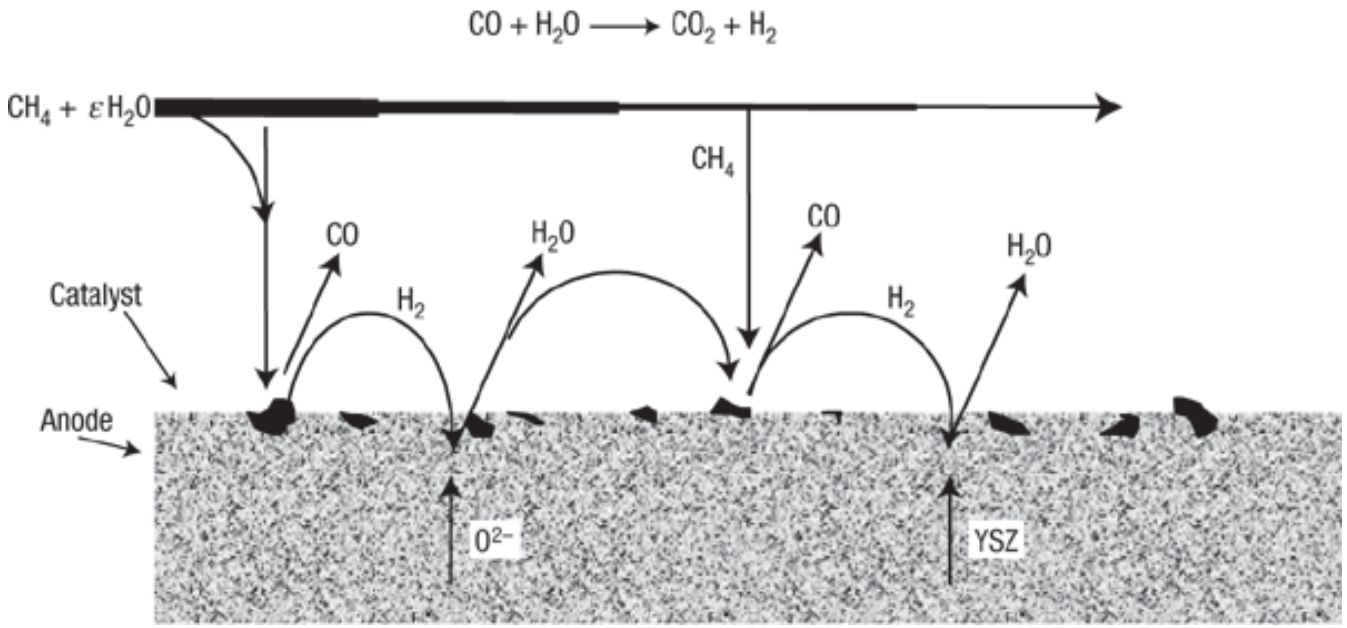

In the commonly used Ni/YSZ cermet anode, nickel has the dual roles of catalyst for hydrogen oxidation and electrical current conductor. In addition, nickel is highly active for the steam-reforming of methane.

This catalytic property is exploited in internal reforming SOFCs that can operate on fuels composed of a CH_4/H_2O mixture, which reacts on the nickel anode producing a hydrogen-rich synthesis gas, which then undergoes electrochemical oxidation at the three-phase boundary.

SOFC Ni-anodes and hydrocarbons

The major disadvantage of the nickel-cermet anode electrode arises from the **promotion of catalytic cracking of hydrocarbon**. Nickel catalyses the formation of carbon filaments from hydrocarbons under reducing conditions. Unless sufficient amounts of **steam** are present along with the hydrocarbon to remove carbon from the nickel surface at a rate faster than that of carbon dissolution and precipitation, the anode will be destroyed.

- The rapid deposition of carbon at nickel cermets means that *direct oxidation of methane is not technically viable in Nickel-containing SOFCs*; for natural gas to be used as fuel, it needs to be reformed with steam.

Impurities in the fuel stream, particularly sulphur, also inhibit Ni-anode functionality.

- ✓ One approach to overcoming the limitations of Ni anodes is to augment the oxidation activity of Ni/YSZ cermets through the addition of an oxidation catalyst, such as Ceria (cerium oxide)

Example of microstructure

Example of microstructure for “anode-supported” SOFC

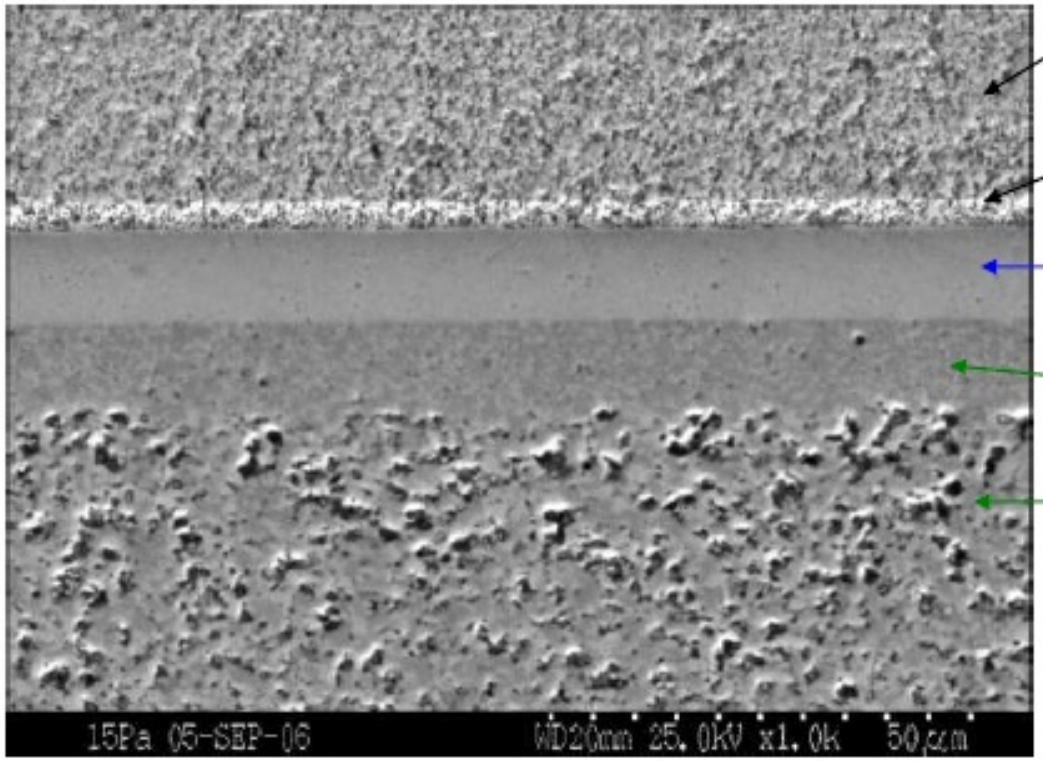

Cathode: LSCF (~30 μm)

Interlayer: Ceria Based Layer (~4 μm)

Electrolyte: 8 mol. YSZ (~10 μm)

Active Anode: NiO – YSZ (~10 μm)

Bulk Anode: NiO – YSZ (~500 μm)

Within the anode, the provision of oxide-ion mobility complementary to the electronic conductivity and electrocatalytic action of the metal is a very important secondary role of the ceramic, enhancing the electrochemical performance by the delocalization of the electrochemically active TPB zone

- The solid electrolyte eliminates the problems related to:
  - management and equilibrium of three phase gas-liquid-solid boundaries
  - gas solubility and leakages across the electrolyte

SOFC layers and reactions

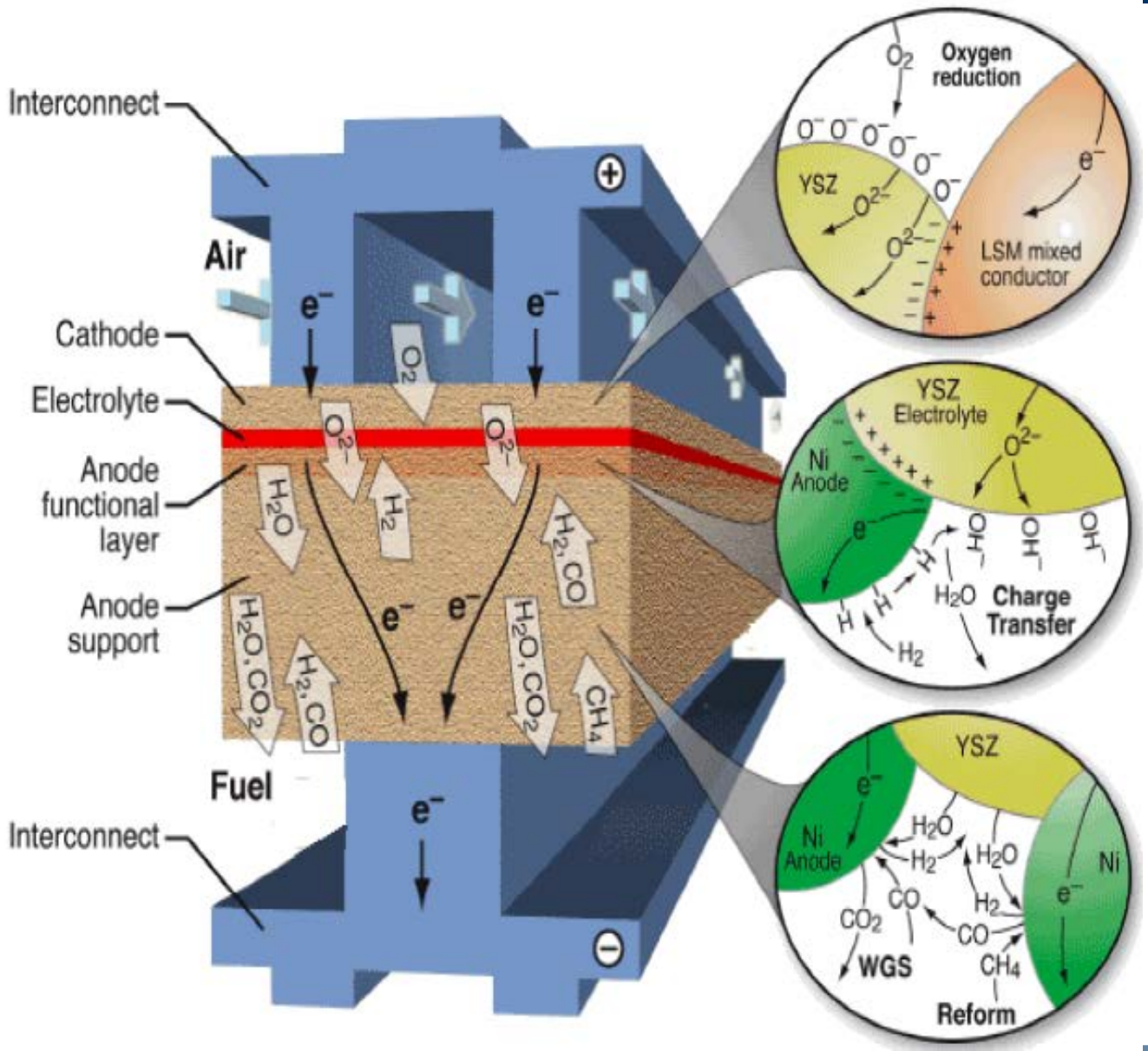

Reactions occur at the triple «phase» (electrode-electrolyte-gas) boundary TPB

- geometrical flexibility (tubular, planar, monolytical cells)
- possible integration with advanced gas-steam cycles

Examples of SOFCs

- Stationary applications: residential 1 ÷ 5 kW and larger DG 100 kW ÷ 4.5 MW
- Internal reforming; cogeneration at high temperture; geometrical flexibility (tubular, planar, monolytical cells)
- Efficiency up to 45 ÷ 60%; possible integration with advanced gas-steam cycles hybrid cycles up to 60 ÷ 75%(studies)

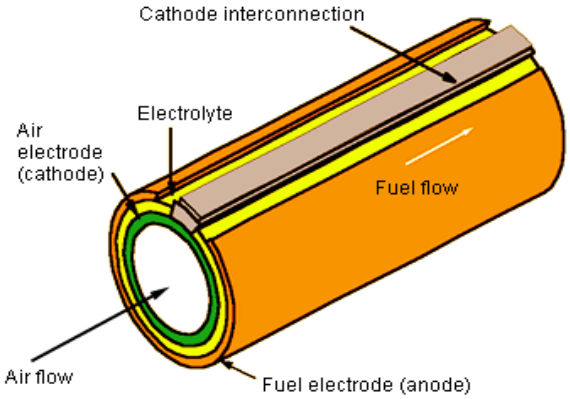

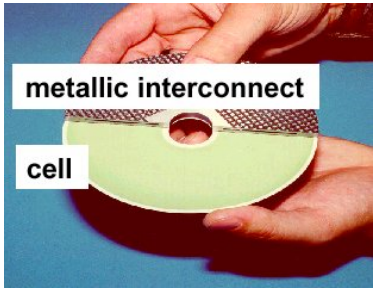

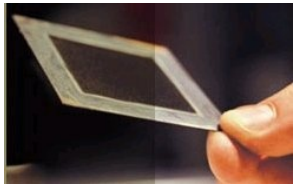

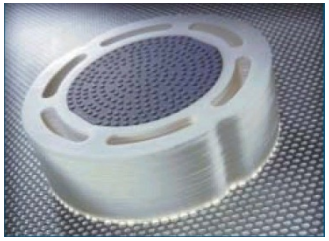

Above: Siemens-Westinghouse tubular SOFC, circular-planar Hexis SOFC, Ceres and CFCL SOFC; below: 100 kW plant from BloomEnergy; 1 kW Hexis; Rolls-Royce and FCE cells.

SOFC: planar shape (or flat plate type)

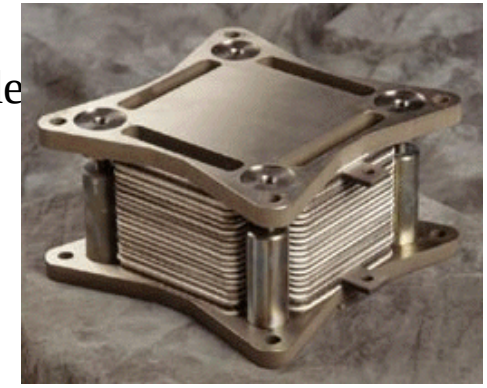

- Active components are shaped in planar layers
- Bipolar interconnections (ceramc or metallic) are shaped on their side to create reactant paths
- Advantages:

✓ easy serial connection of stacked cells

✓ short current path (perpendicular to the cell plane) and low losses

- **FLAT PLATE**

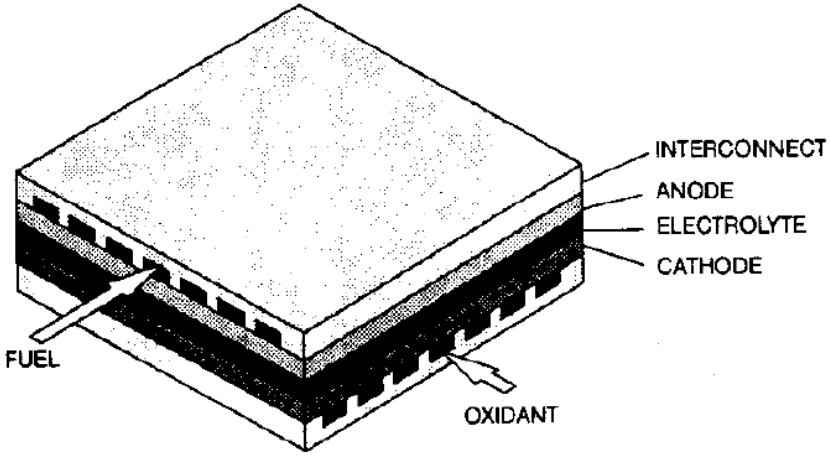

Disadvantages:

✓ necessity of peripheral seals to avoid leakage

✓ difficult manufacture of large surface cells (planarity tolerance, thermomechanic stresses)

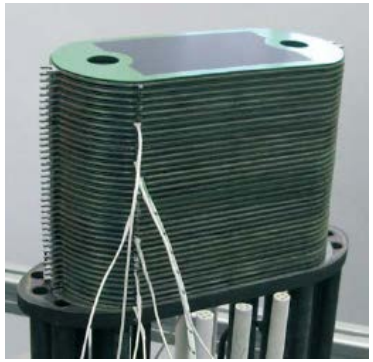

Manufacturers: Fuel Cell Energy – VPS ,Ceramic Fuel Cell, Wartsila, HT Ceramix - SOFC Power, Ceres power, Mitsubishi (MHI), SOFCo, Bloom Energy; with derived shapes: Fuji Electric, Ztek, Rolls-Royce ; Experimented within modules up to 20-100 kW

Example of life test (2000)

For all FC types, a crucial development issue is long-term stability

Test (**2000**) on Hexis cells **(- 4% in 1000 h**)

Longtime Tests

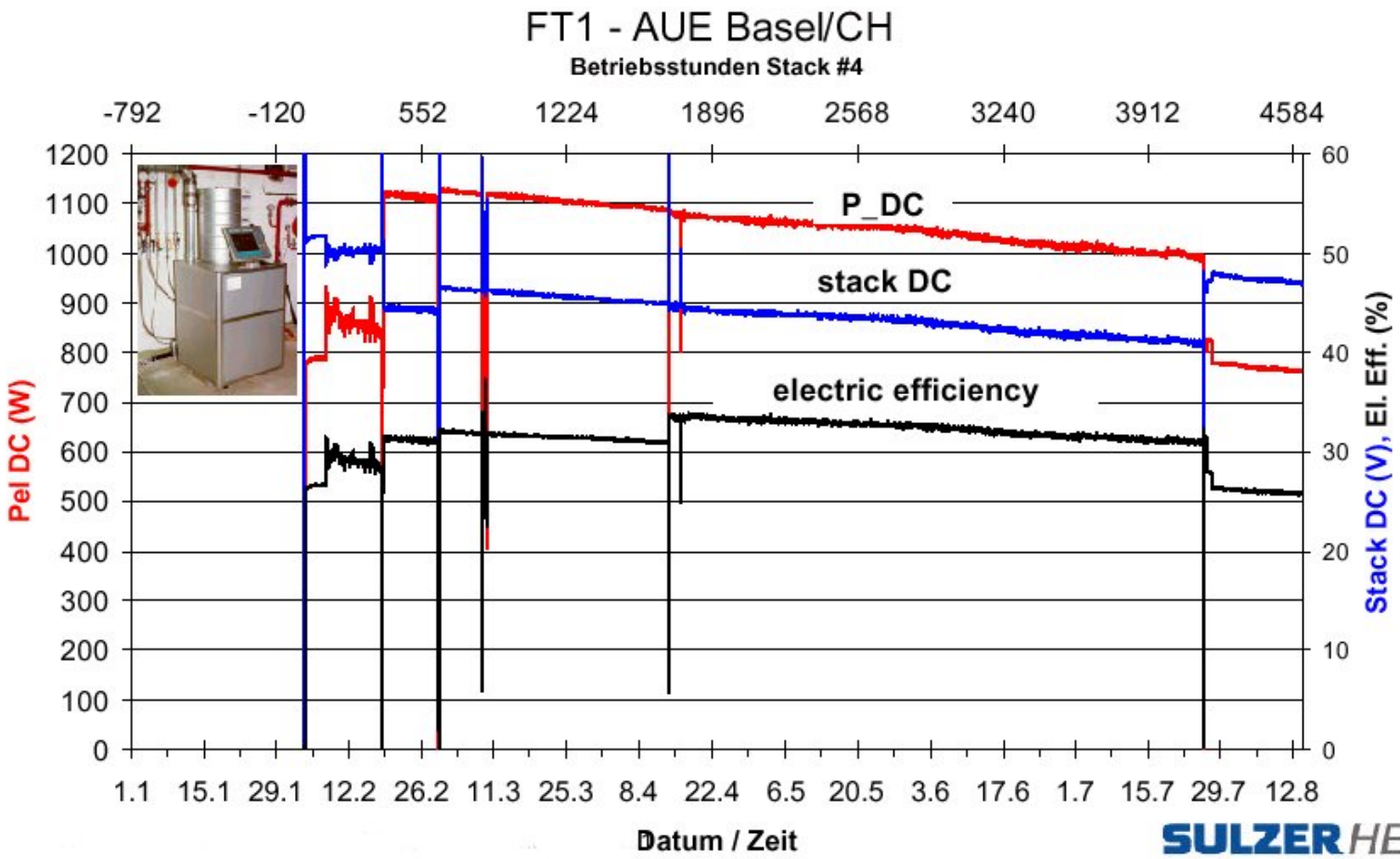

Example of life test (2007)

Example of test on a 5 kW stack, decay about **2% in 1000 h** (FCE, 2007)

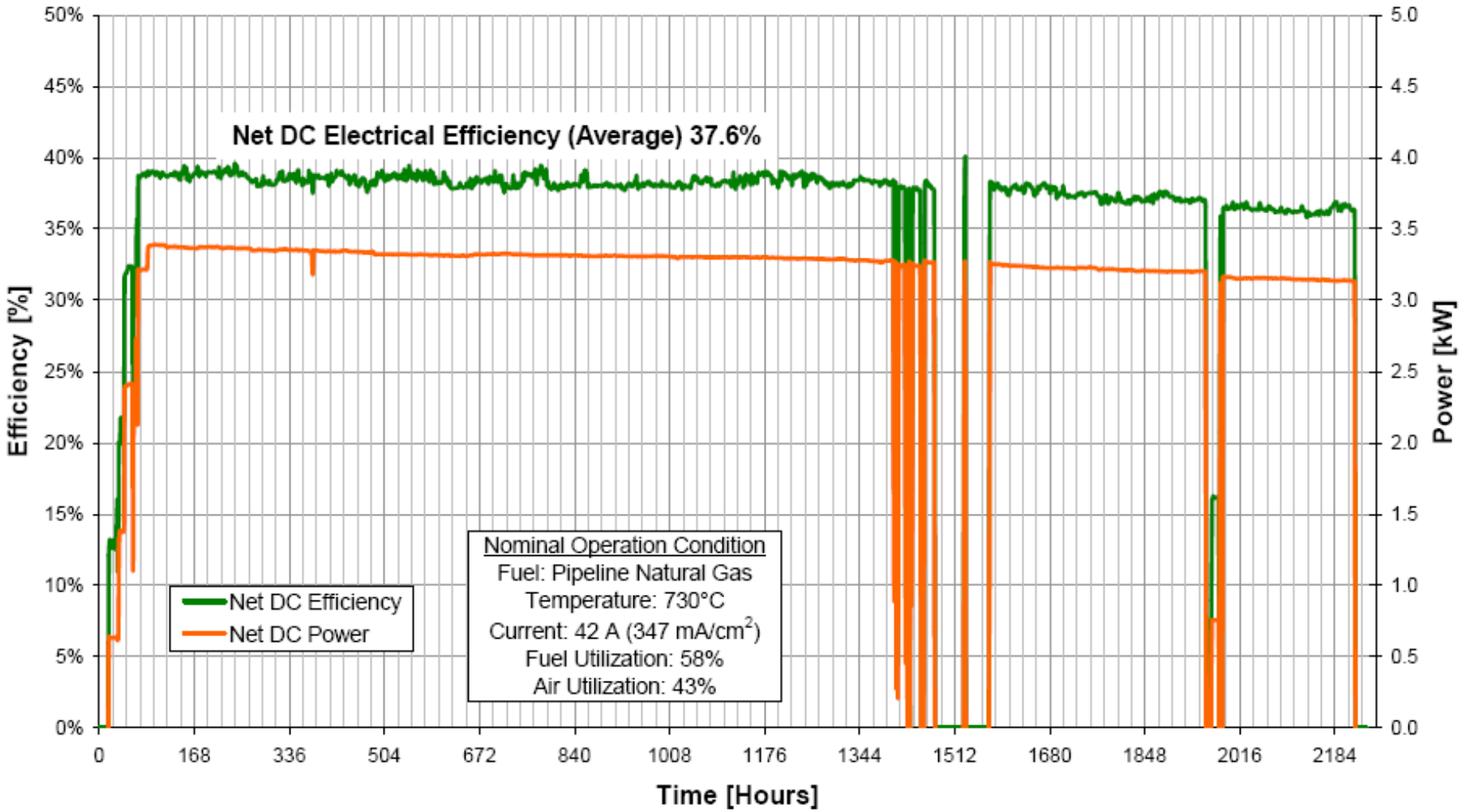

Example of life test (2011)

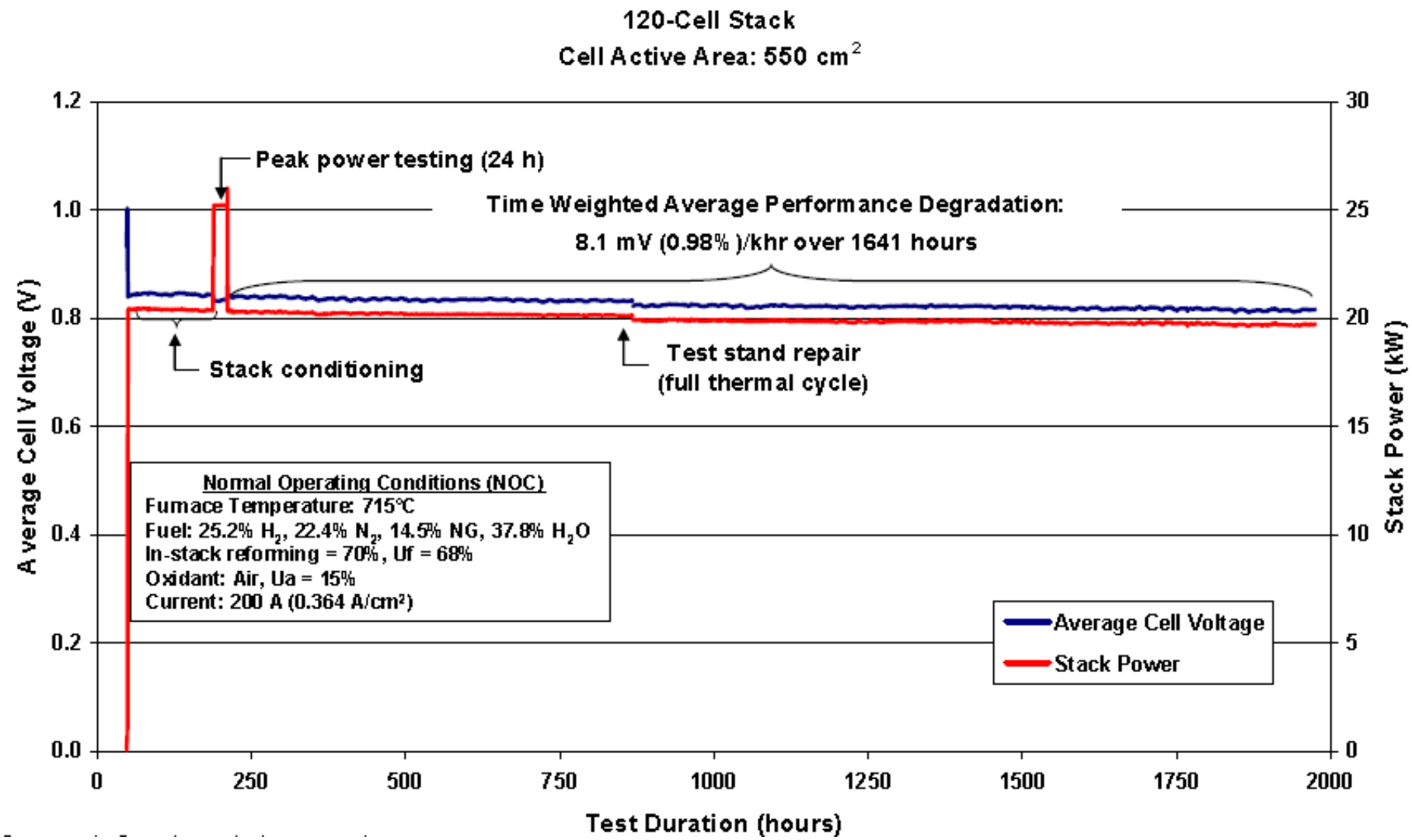

Example: CFCL prototypes (2010-today)

Prototypes SOFC CFCL (Australia)-Solid Power (Italy) , advanced R&D stage (still very expensive!):

- Planar cells, IT-SOFC (750°C) ; 2 kW_{el}, net electric efficiency 55-60% from NG, integrated reformer ;
- Thermal power: 300-1000 W (exhaust outlet @ 30°C)
- Total efficiency up to 85%

600x670x970 mm (h) , 200 kg

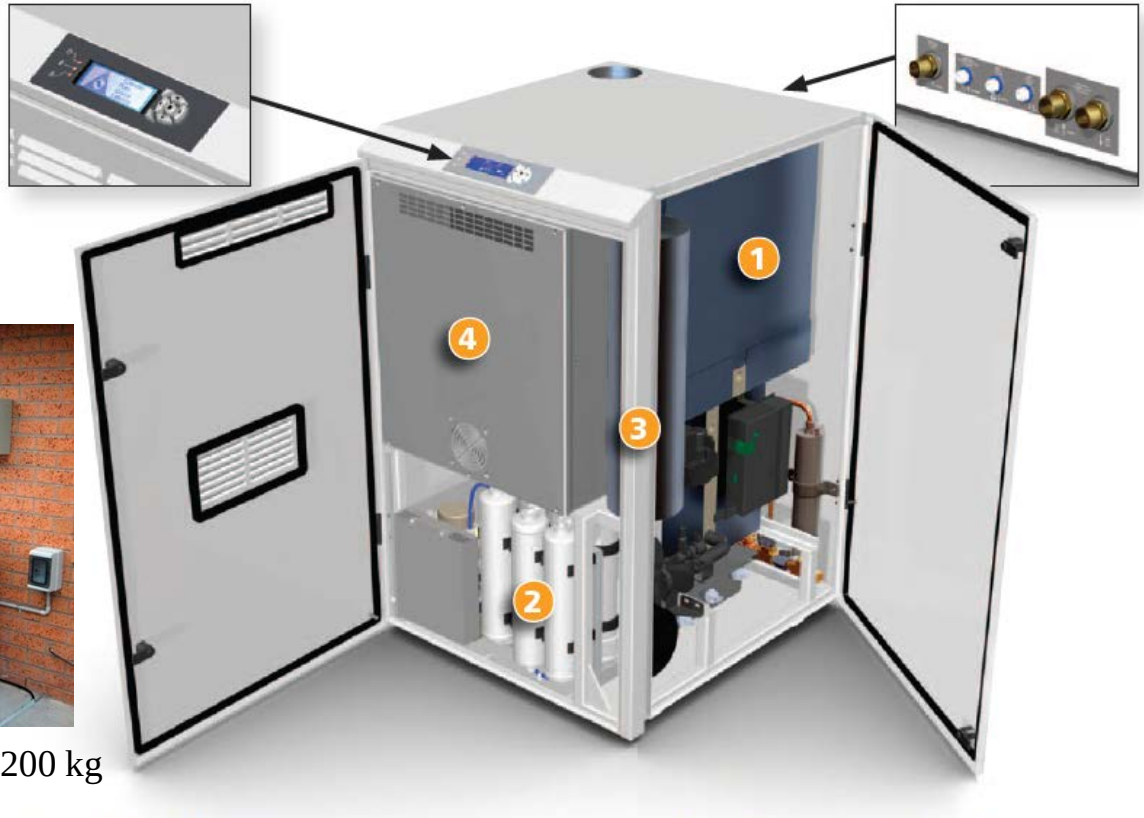

1 **Gennex™** Fuel Cell Module
2 Integrated water treatment system
3 Integrated gas cleaning system
4 Power management system, including grid connect inverter

1 Modulo a celle a combustibile **Gennex™**
2 Sistema integrato di trattamento acqua
3 Sistema integrato di lavaggio gas
4 Sistema di gestione alimentazione elettrica, comprensivo di invertitore connessione alla rete

Results of tests on cells / complete system

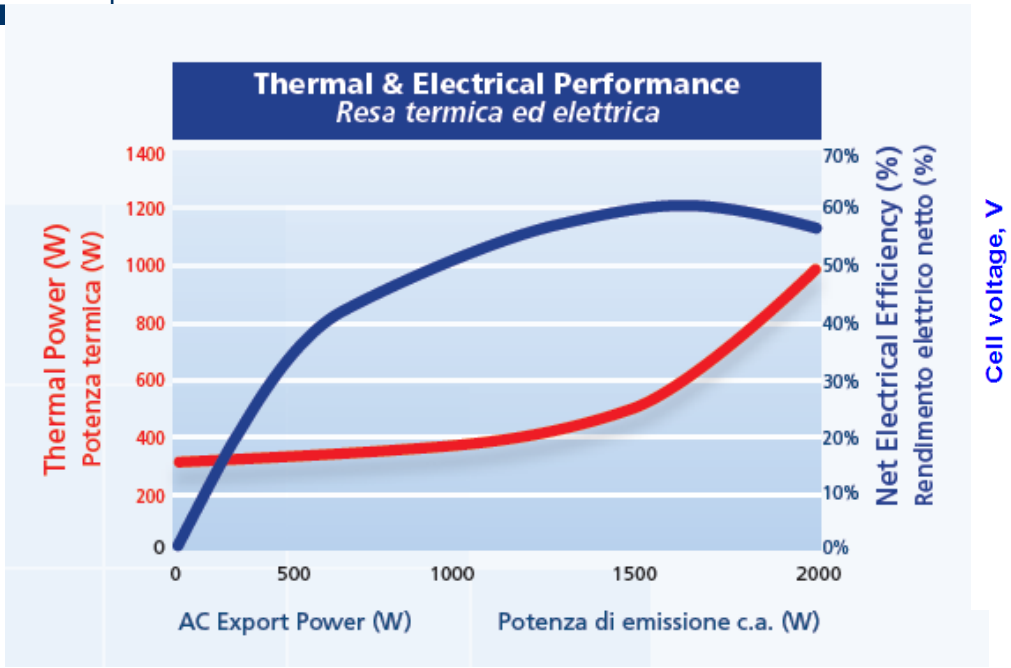

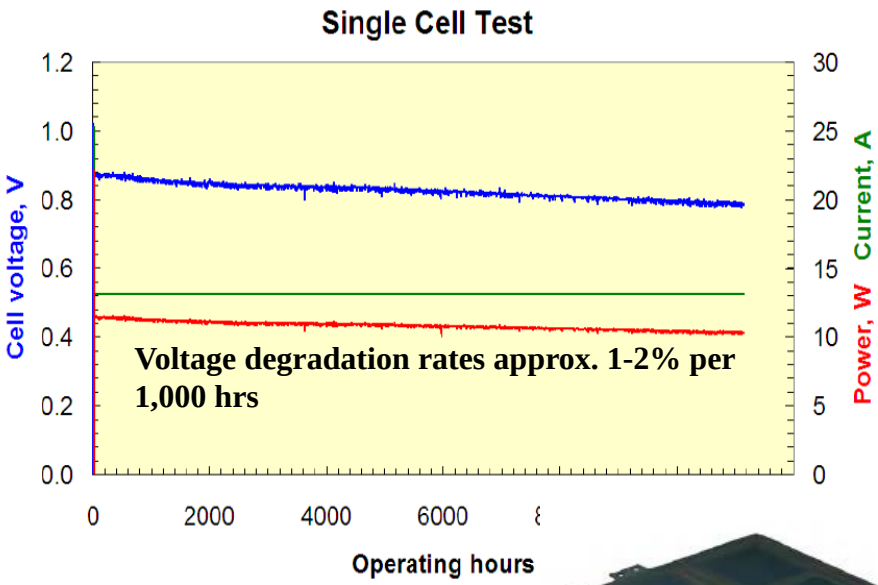

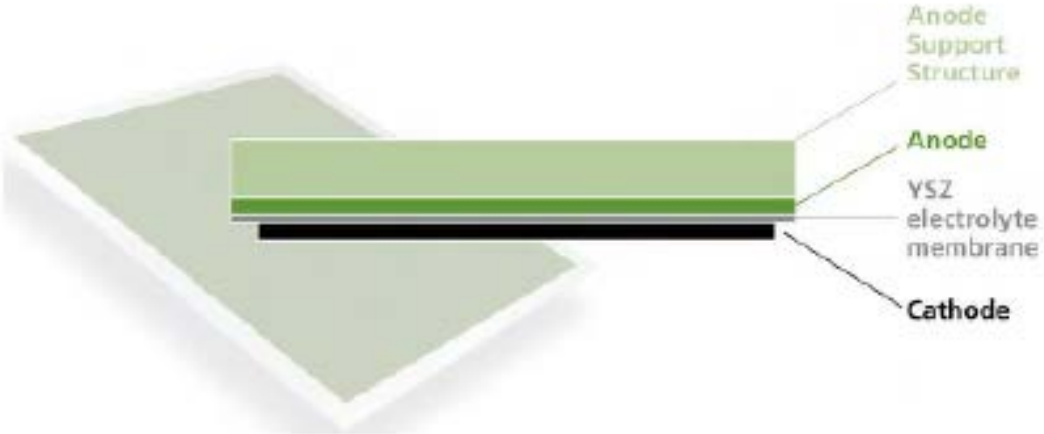

Long-term testing (>23,000 hrs)

Thin Cell (≈ 250 microns)

High Power Density (>600mW/cm^2)

Results of tests on CFCL cells / complete system

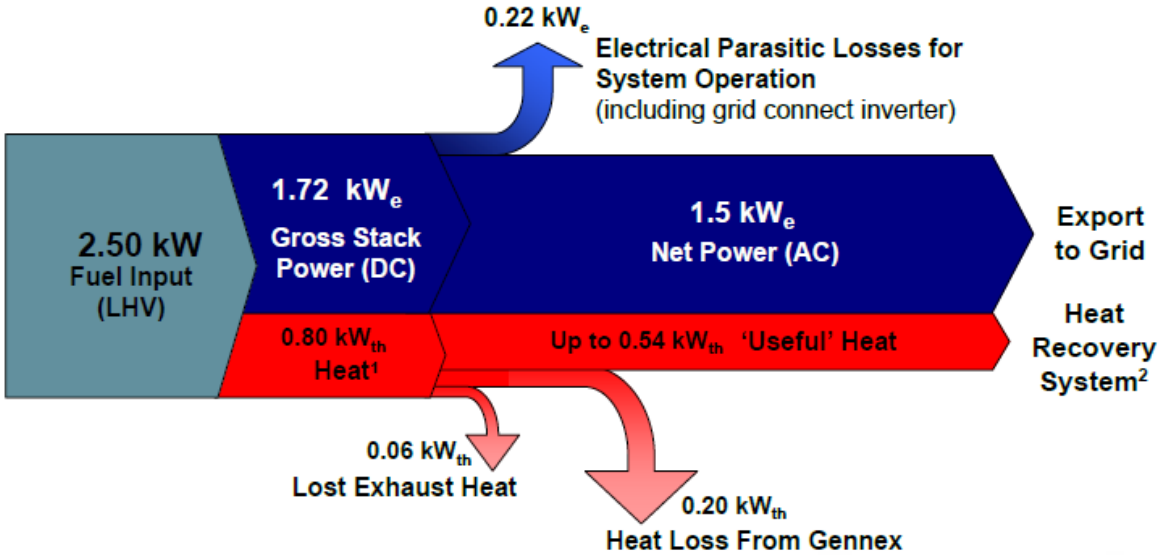

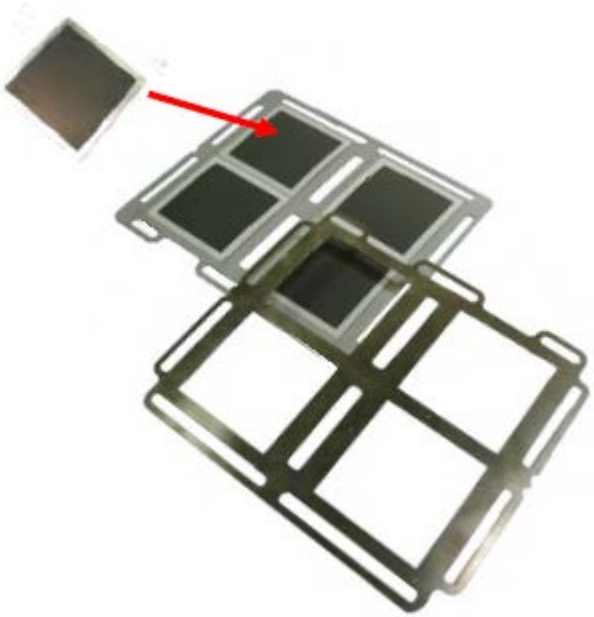

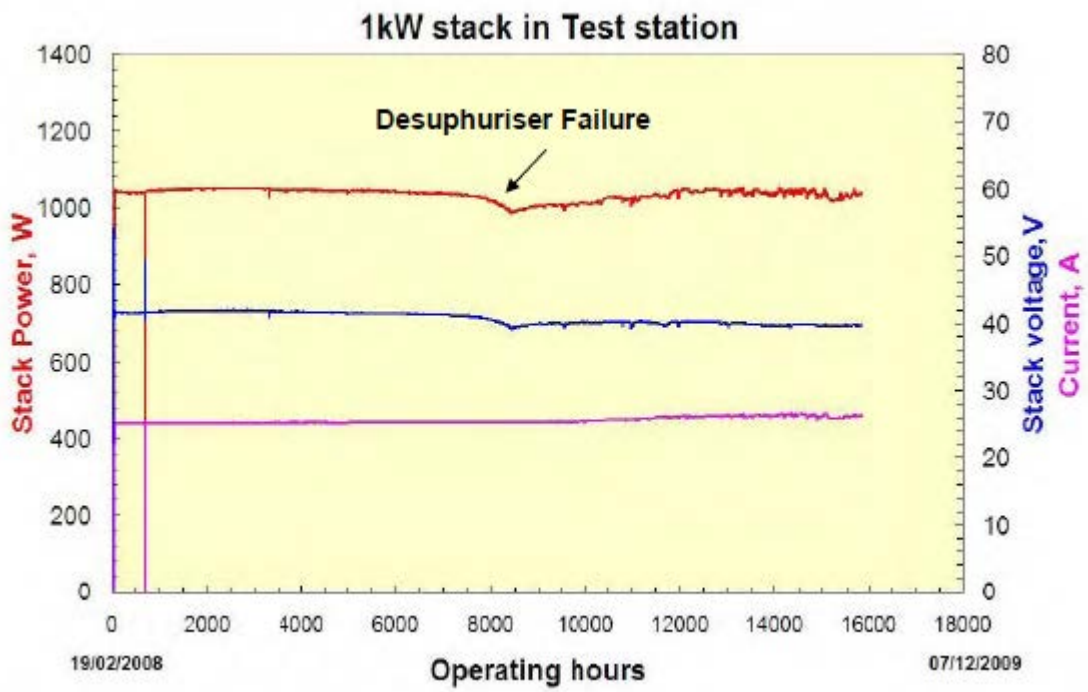

SOFC: other examples of R&D on CHP systems (2015)

- CHP unit @ 2.5 kWel from SolidPower (Ita), NG fuel, expected electrical efficiency 50% / total efficiency 90%

NOMINAL ELECTRIC POWER (NET AC)	2.0 – 2.5 kW
MODULATION RANGE	30% - 100%
ELECTRICAL EFFICIENCY (NET AC, LHV)	50 %
COGENERATION EFFICIENCY (LHV, WATER 30°C)	90%
FOOTPRINT (SPACE REQUIRED)	1.2 x 1.5 m
WEIGHT	approx 350 kg
ELECTRICAL CONNECTION	on grid
FUEL	grid gas, normal supply pressure
THERMAL CYCLES PER YEAR	~ 10
WATER STORAGE	> 300 l
WATER TEMPERATURE	30 - 70°C
NOISE LEVEL	< 50 dB(A)
MAINTENANCE INTERVAL	1 year

- Current cost ≅ 25.000 € (first units of EU Demo project EneField)

Two units under test at LMC lab @ Politecnico Milano

Other applications beyond stationary…

- Hydrogen SOFCs on vehicles for onboard high efficiency electricity generation, devoted to auxiliary loads (project by Delphi, 1.5 – 9 kW range).
- Higher efficiency than conventional engine+alternator.

Power:	5 kW
Voltage:	42 V
Efficiency:	45 %
Volume:	20 l (stack)
	48 l (system)
Weight:	22 kg (stack)
	45 kg (system)

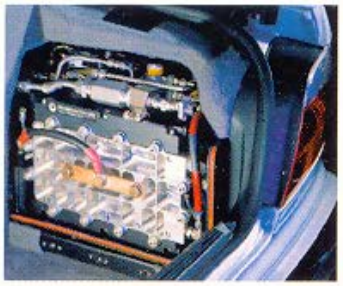

SOFC: costs and emissions

	Current	Mid-term perspective
Investment cost	4000-8000 €/kWe	< 1000 €/kW
O&M cost (incl. cell subst.)	2-2.5 c€/kWh	1-1.5 c€/kWh
Life extension	<40.000 h	> 60.000 h
Emissions (@15% O2)	<2 ppmv CO and NOx	

O&M is inclusive of periodical cell substitution costs. SOx emissions are negligible.

Example: BloomEnergy reports an investment costs of 700-800.000 $ for a complete 100 kW module, resulting in 7000-8000 $/kW (2012)

Cost projections: example

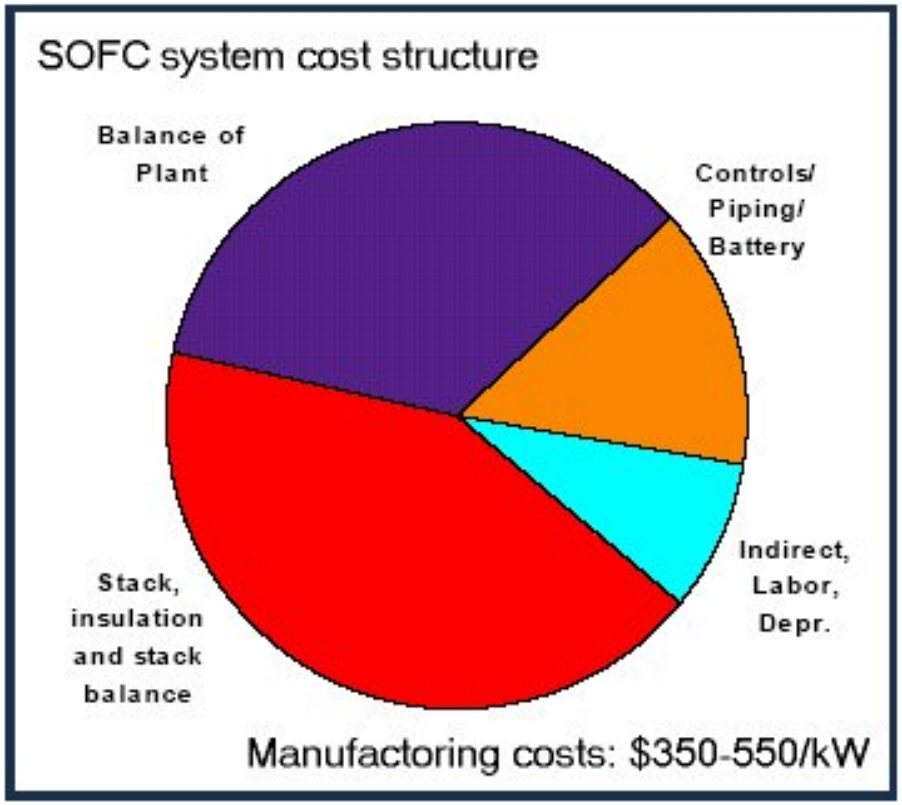

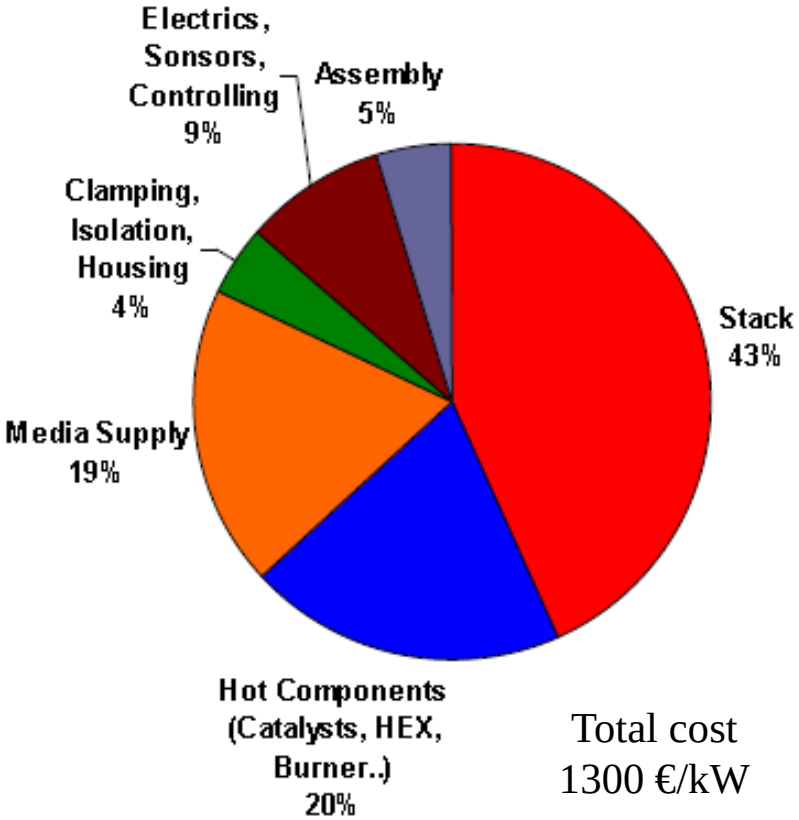

Total cost
1300 €/kW

Cost projection for a 5 kW APU SOFC (auxiliary power unit), fed with gasoline, with partial oxidation reformer (cell at 300mW/cm^2, 0.7 V, 90 % fuel utilization, hypothesis of production of **500,000 units/year -** DOE-NETL)

Cost projection for a 3 kW APU SOFC (auxiliary power unit), fed with gasoline, with partial oxidation reformer (hypothesis of production of **20,000 units/year –** FP7 Project METSOFC, 2012)

Example of cost analysis (RR, 2010)

Distribution of Production Costs

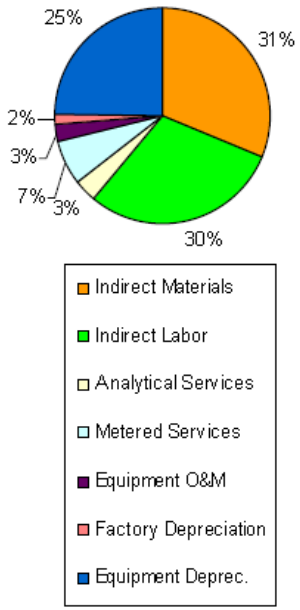

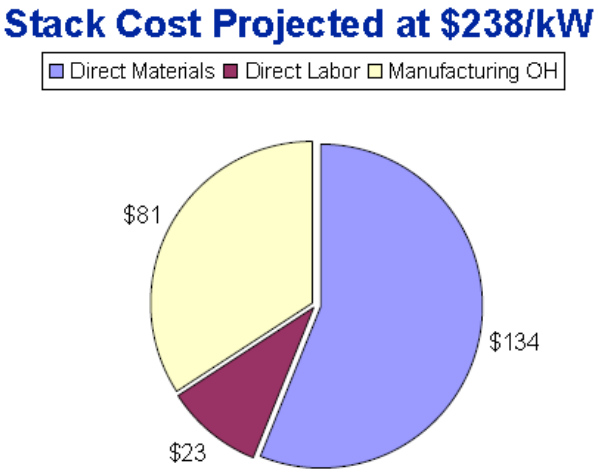

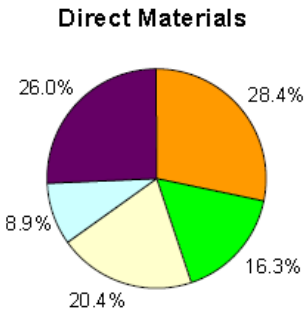

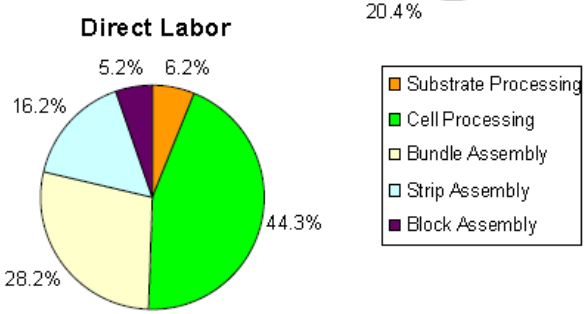

Metric	Value
Production Input (substrates/yr	5,168,095
Production Output (blocks/yr)	7,878
Production Line Yield	77%
Production Capacity (MW)	255

•Several niche markets or “early market applications” may appear at 1500-2000 €/kW

Market evolution in the last years

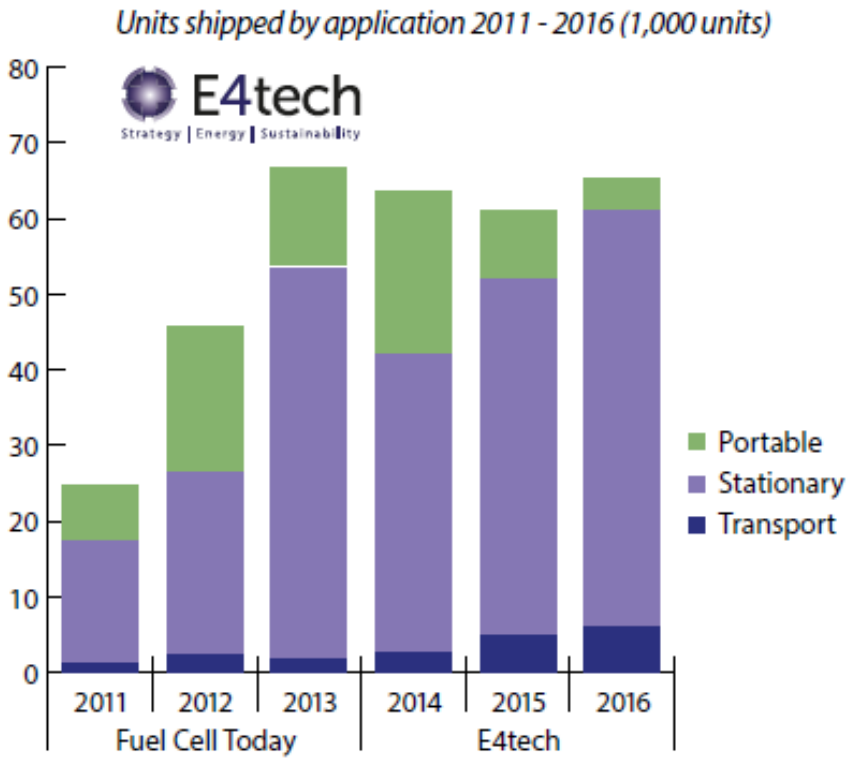

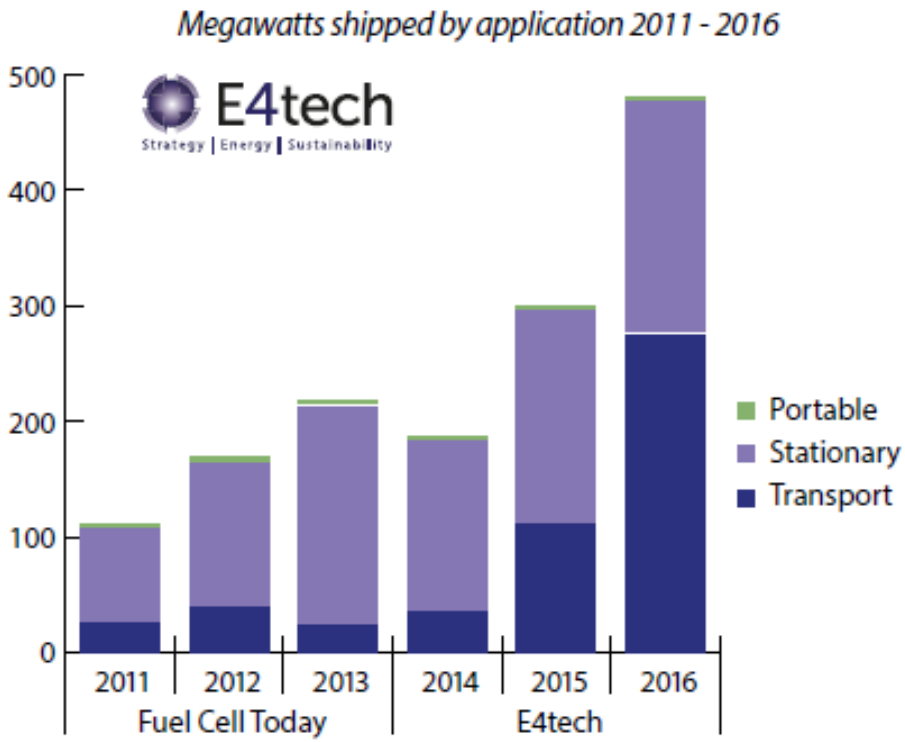

Market evolution in the last years

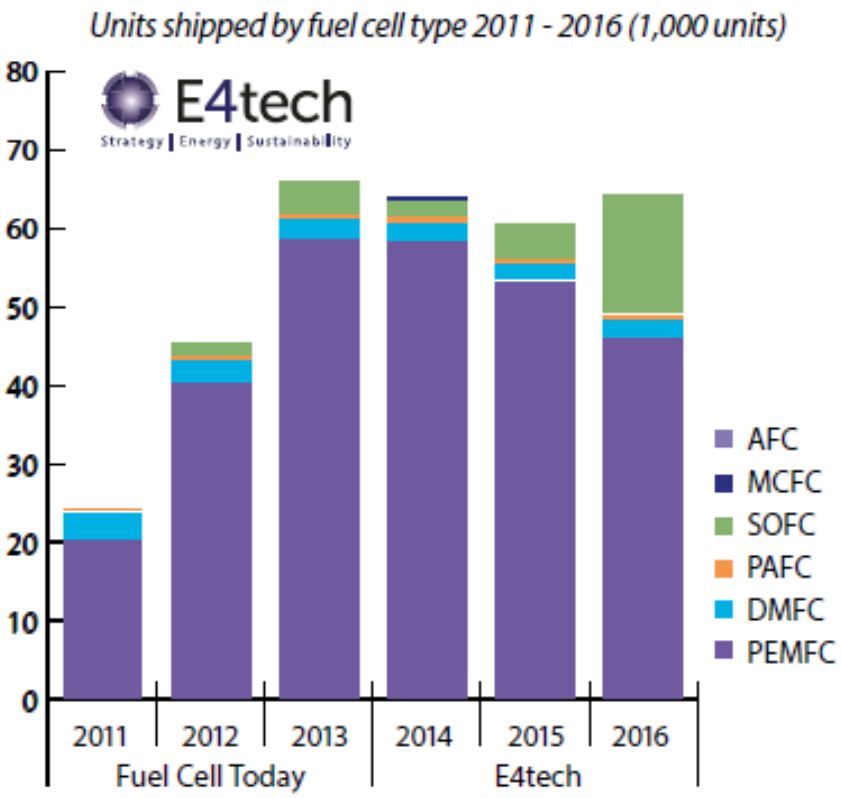

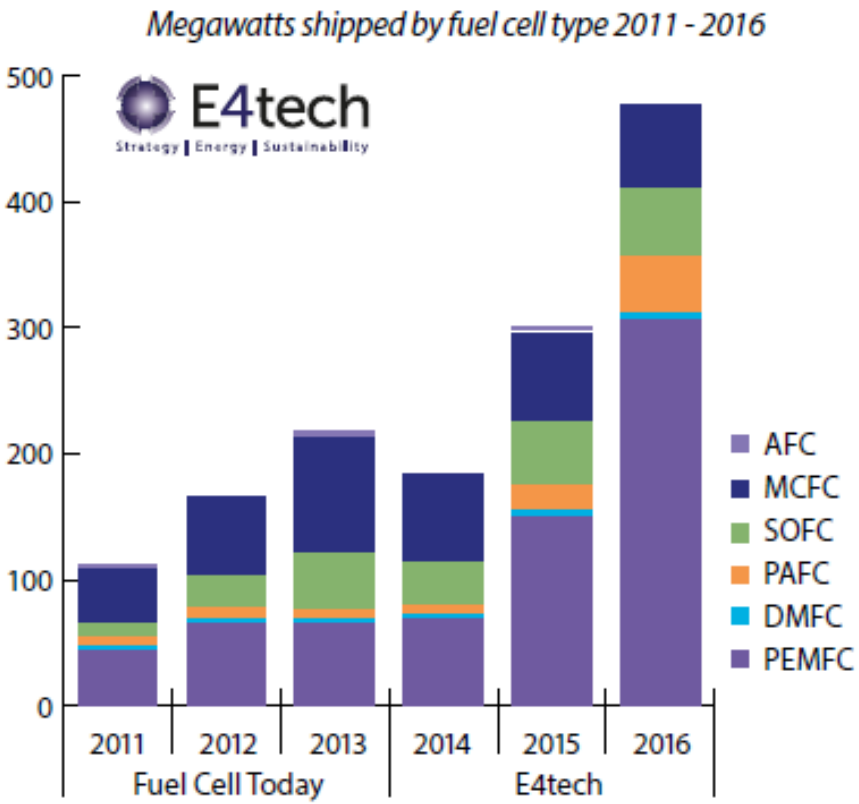

“Hybrid” cycles
or integrated Fuel Cell + Gas Turbine cycles

Basic layout of a hybrid cycle

- Hybrid cycles can be based on different possible gas turbine or steam cycles;
- One of the mostly considered layout is based on recuperated gas turbine cycles, where the FC "*substitutes the combustor*" of the conventional cycle, and oxidizes the fuel.
- In such a GT cycle, the FC can work under pressurized conditions, generating 1) electricity and 2) hot gases which are expanded by the gas turbine

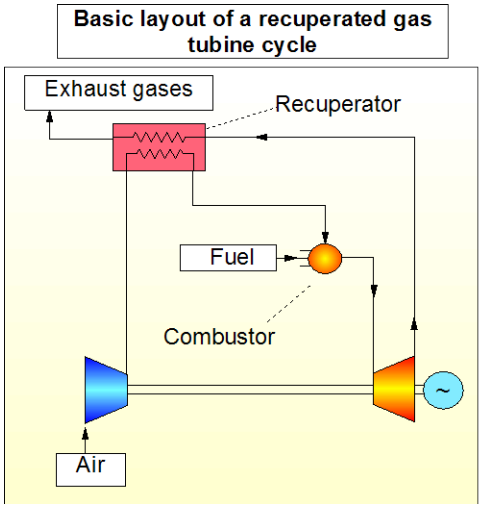

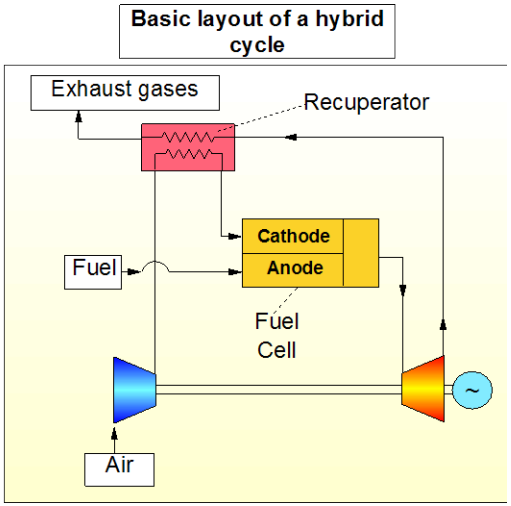

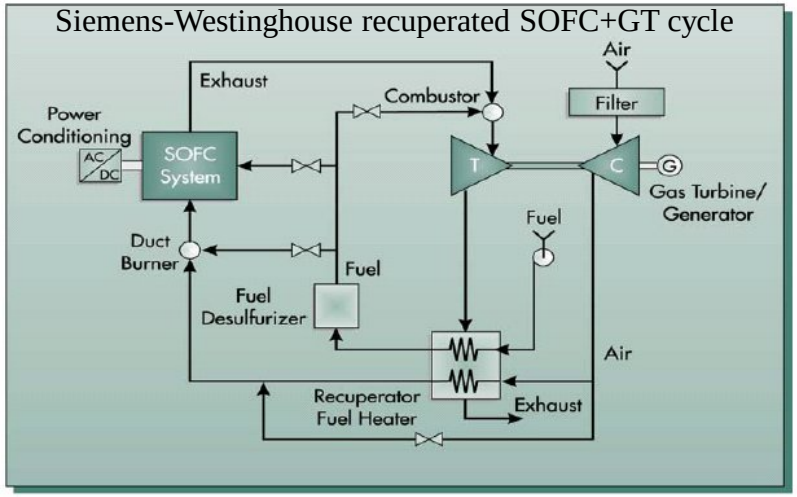

The layout was first experimented by Siemens-Westinghouse with a SOFC; auxiliary burners and bypass valves are required to control the system and to manage transient operation during start-up and shutdown.

• A wide variety of other plant layout are proposed (pressurized, recuperated or not, with anode and/or cathode recycle, atmospheric with "externally firing», with steam turbines...)

An example of simulated SOFC hybrid power plant

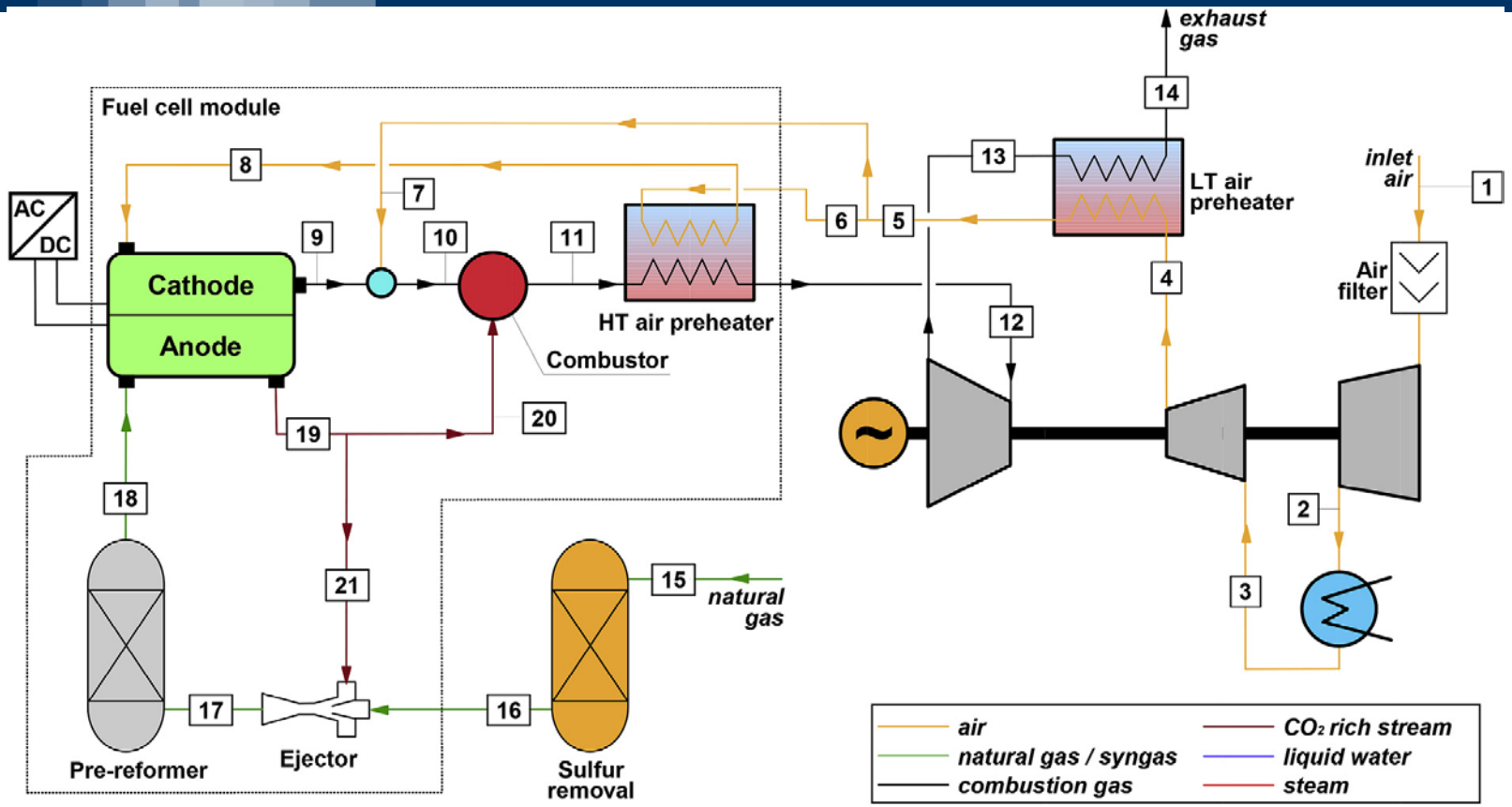

Details on:

Campanari, S., Mastropasqua, L., Gazzani, M., Chiesa, P., Romano, M.C. "*Predicting the ultimate potential of natural gas SOFC power cycles with CO_2 capture - Part A: Methodology and reference cases*", J. of Power Sources, vol. 325, pp. 598-614, 2016, http://dx.doi.org/10.1016/j.jpowsour.2016.05.104.

Plant Performance	SOFC+GT plant
Fuel Inlet (LHV) [MW]	100
Fuel Cell net AC power [MW]	68.06
GT net electric power [MW]	10.71
ST electric power [MW]	-
auxiliaries electric power [MW]	-0.03
net electric power [MW]	78.74
net electric efficiency LHV [%]	78.74

Experimental SOFC / hybrid plants – history (1)

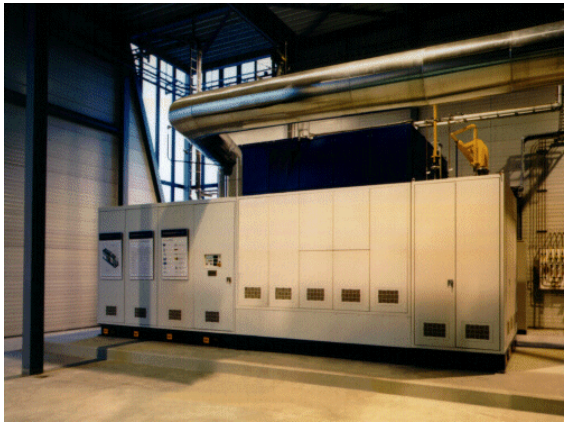

•100 kW SOFC and 220 kW hybrid by Siemens-Westinghouse (2000-2004), about 2000 h of operation, max efficiency about 55% ; about 30 kW from the MGT

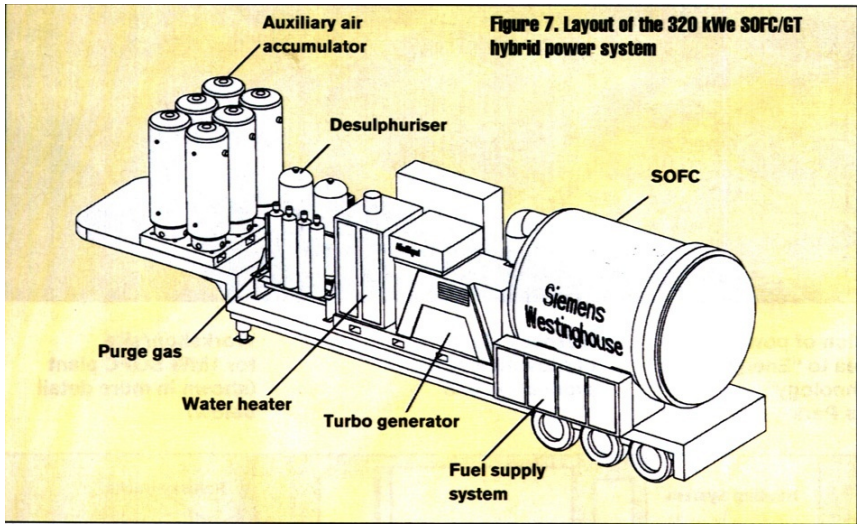

Experimental SOFC / hybrid plants – history (2)

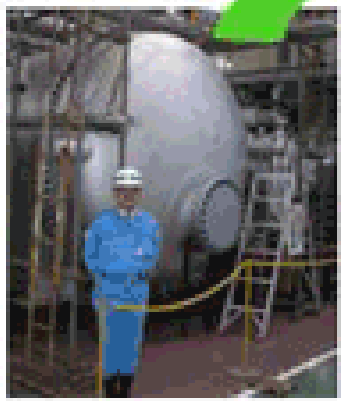

SOFC Module

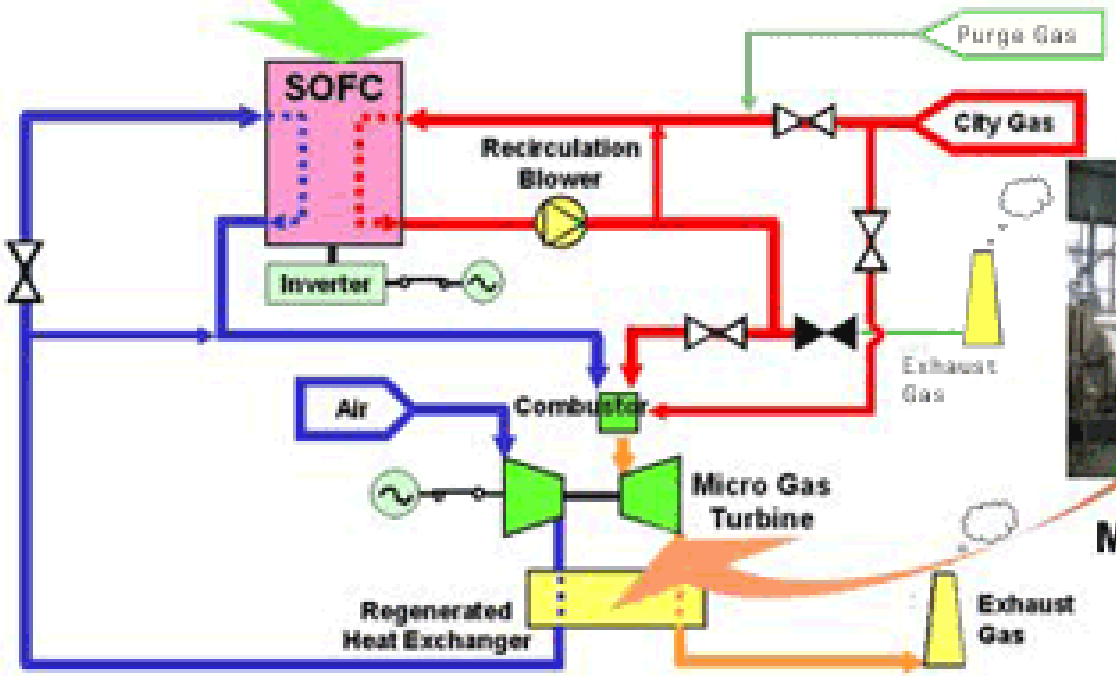

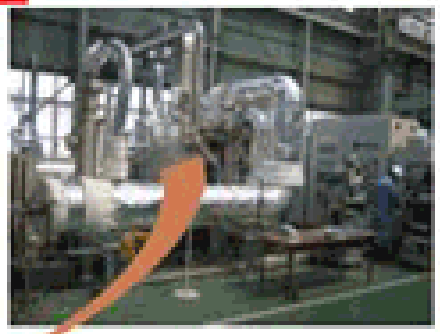

Micro Gas Turbine

200 kW hybrid by Mitsubishi Heavy Industries (MHI) (2007-2008)
about 3000 h of operation, max efficiency 52%, max power 229 kW

MCFC hybrid – Example I

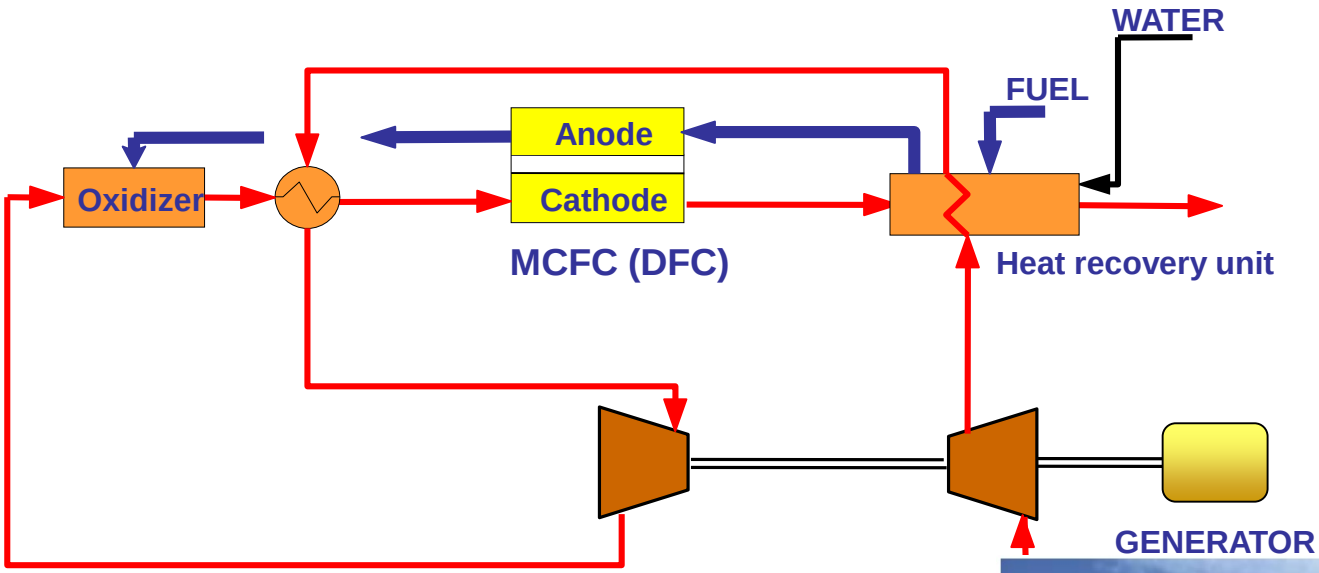

- "Externally fired" layout with atmospheric MCFC (FCE).
- Projected efficiency up to 65-70%, with competitive plant costs.

MCFC hybrid plant layout

POWER PLANT RATING	3.0 MW	CAPITAL COST	$1250/kW
NATURAL GAS COST	$2.5/MMBtu	COST OF ELECTRICITY	4.2 cents/kWh
NATURAL GAS COST	$4.0/MMBtu	COST OF ELECTRICITY	5.1 cents/kWh

STACK REPLACEMENT COST (every 5 years)	$380/kW
BALANCE OF PLANT LIFE	30 years
LOAD FACTOR	95%
O&M COST (Unmanned Plant)	
FIXED (Monitoring, etc.)	$21,000/yr
VARIABLE (Consumables	$89,000/yr
COGENERATION STEAM	NO CREDIT

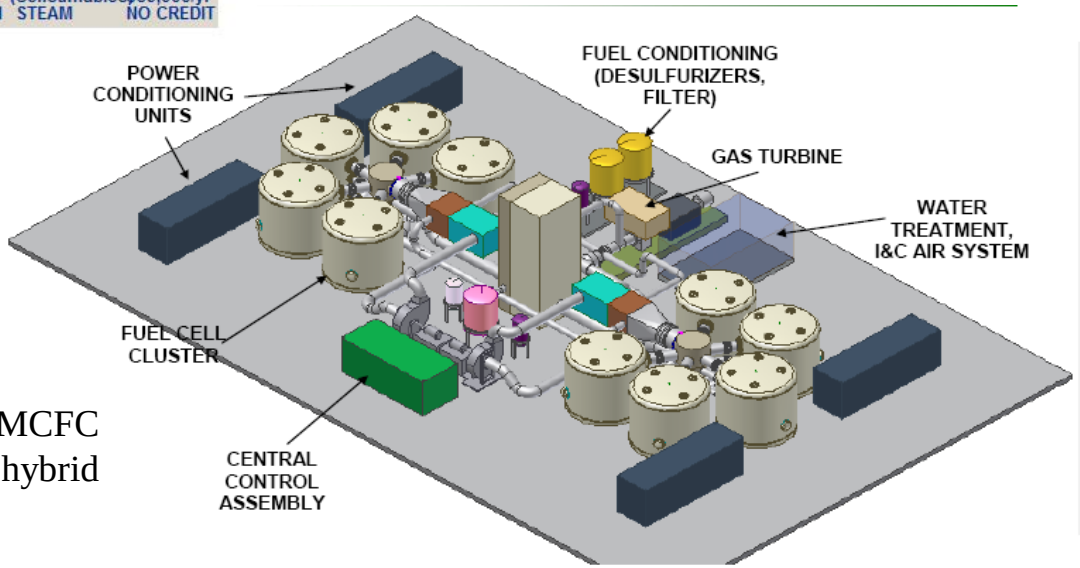

20 MW plant layout based on MCFC hybrid

Hybrid MCFC cycle – history (1)

- Prototype 350 kW plant (Toyota- IHI)
- About 5000 h of operation , efficiency 52%

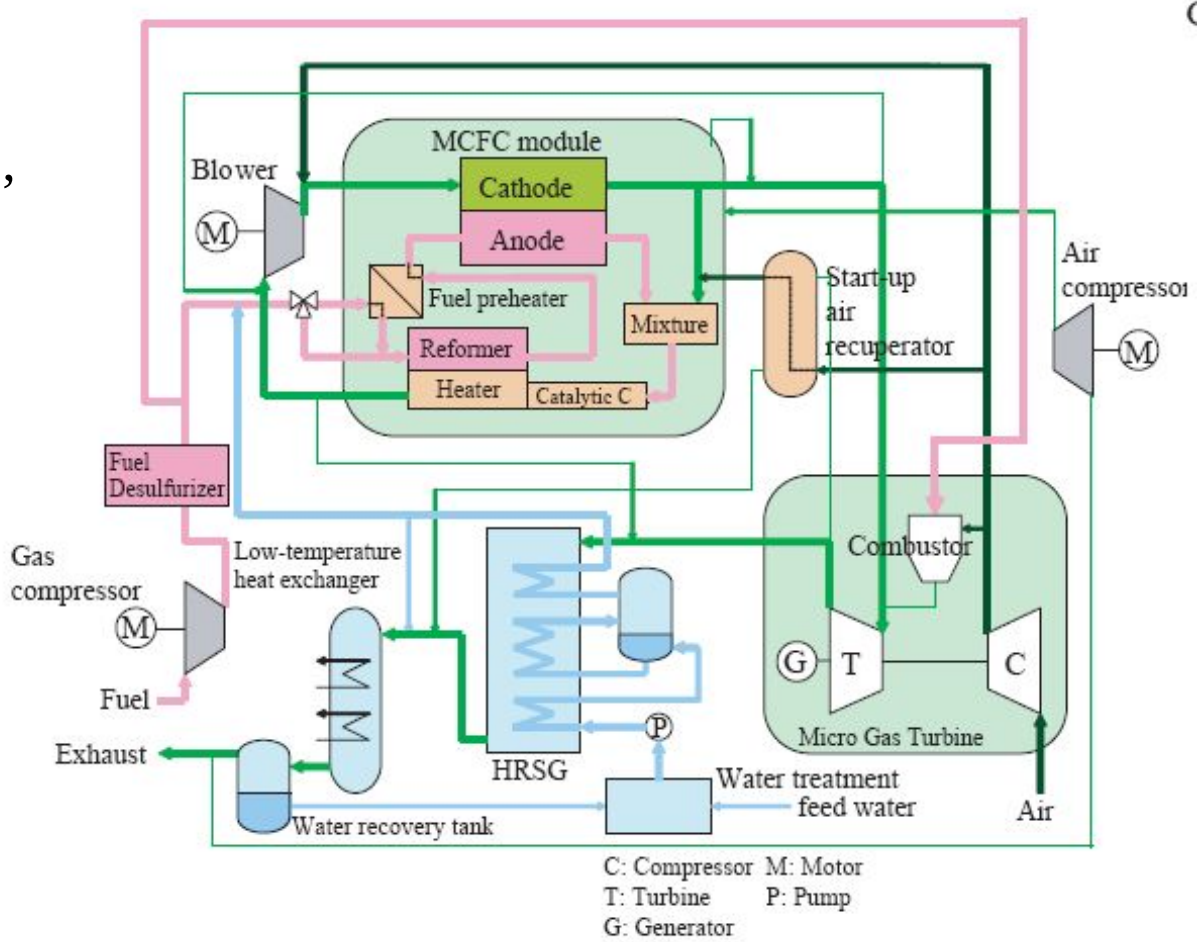

Plant experimented at EXPO 2005, Aichi, Japan

Comparisons among hybrid cycles - II

Comparison between SOFC and MCFC hybrid cycles shows the following results:

- Thermodynamic analysis is in favor of the SOFC cycle, with higher maximum efficiency and a simpler configuration (not influenced by the MCFC intrinsic requirements of CO_2 recirculation).
- The optimized pressure ratio of the more interesting solutions is similar (β=3-5).
- The MCFC cycle may reach higher specific work when operating at higher oxidant utilization.

➢ A critical point is that hybrid cycles, when using pressurized gas cycle configurations, generally require dedicated turbomachinery (in terms of optimized pressure ratio and operating temperature), different from commercially available GTs.

• *At any rate, the major issues which will influence the future deployment of MCFCs/SOFCs hybrid cycles, as well as the match of possible commercial success, are* ***cost, reliability and life extension*** *of the two fuel cell technology.*

..but long term predictions are difficult…

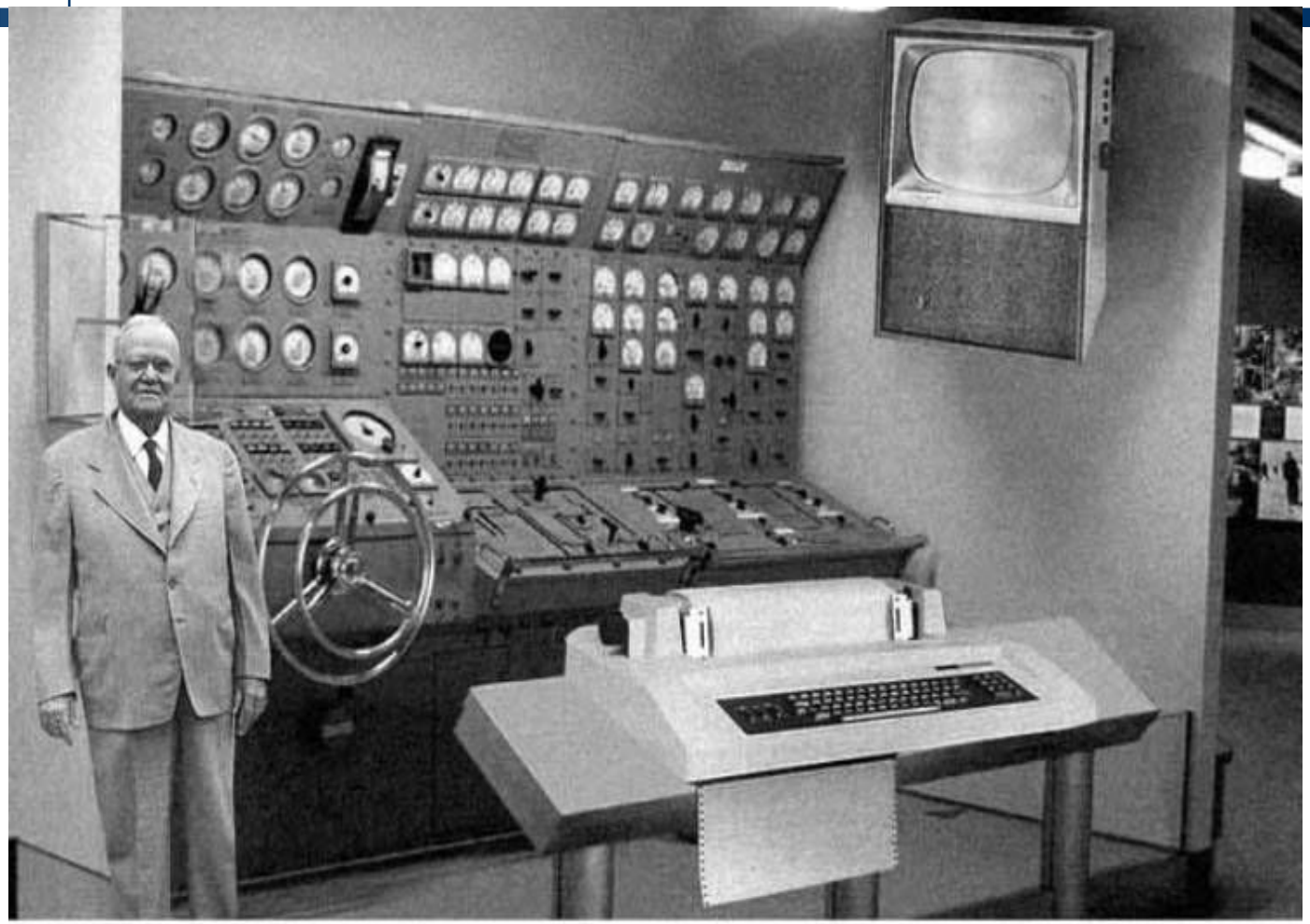

Taken from: TOTAL, Philippe Mulard, 2005

Scientists from the RAND Corp. have created in 1954 this model to illustrate how a „home computer“ could look like in the years 2004. The scientists readily admit that the computer will require not yet invented technology to actually work, but 50 years from now scientific progress was expected to solve these problems. With teletype interface and the FORTRAN language, the computer will be easy to use.

Additional material

FCs for transport and Well-to-wheel (W2W) balances

Well to wheel balances may be used to evaluate the efficiency of an energy system for transportation applications. They require an accurate analysis of all passages, and careful assumptions.

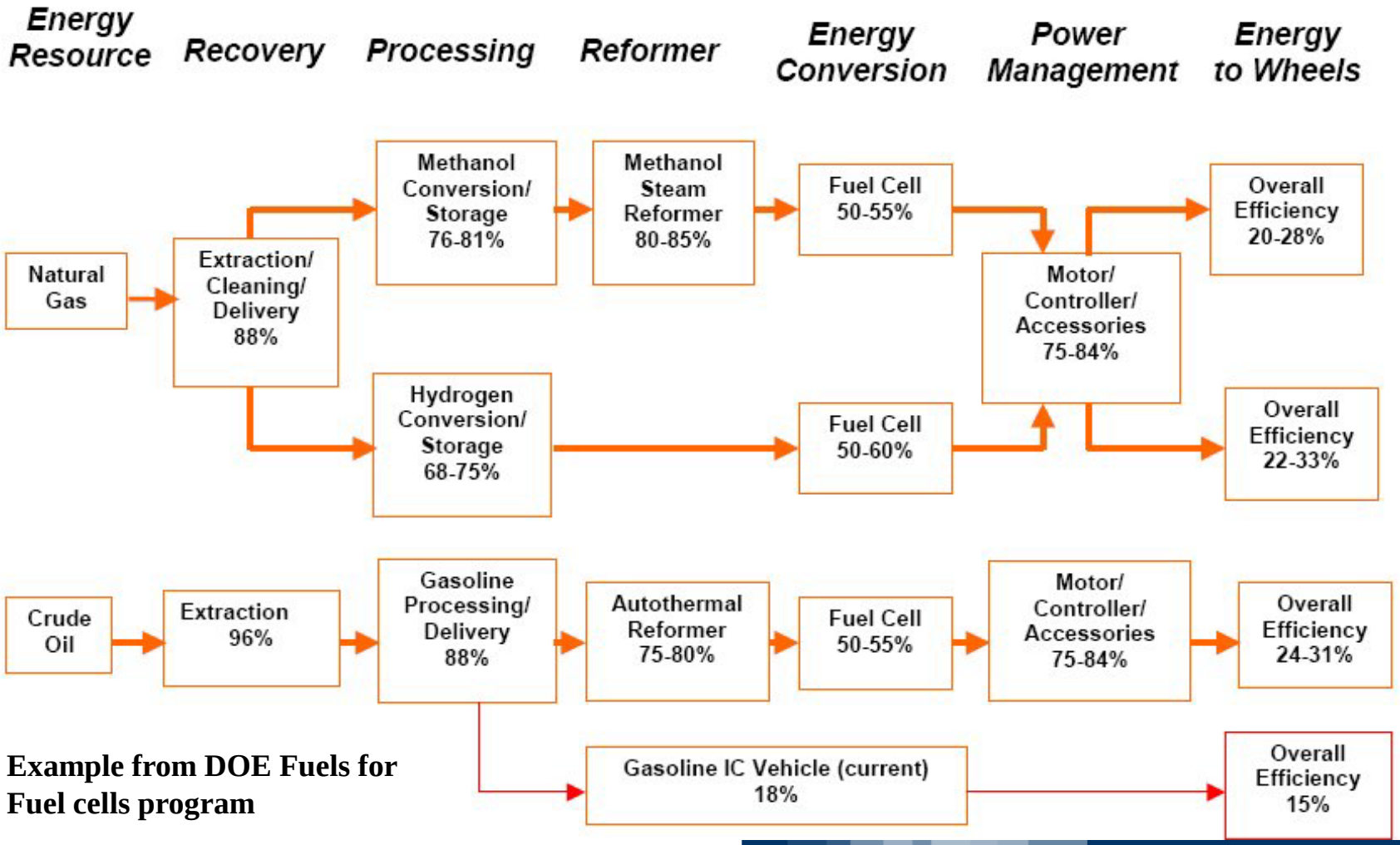

Example from DOE Fuels for Fuel cells program

Well-to-wheel (W2W) balances - II

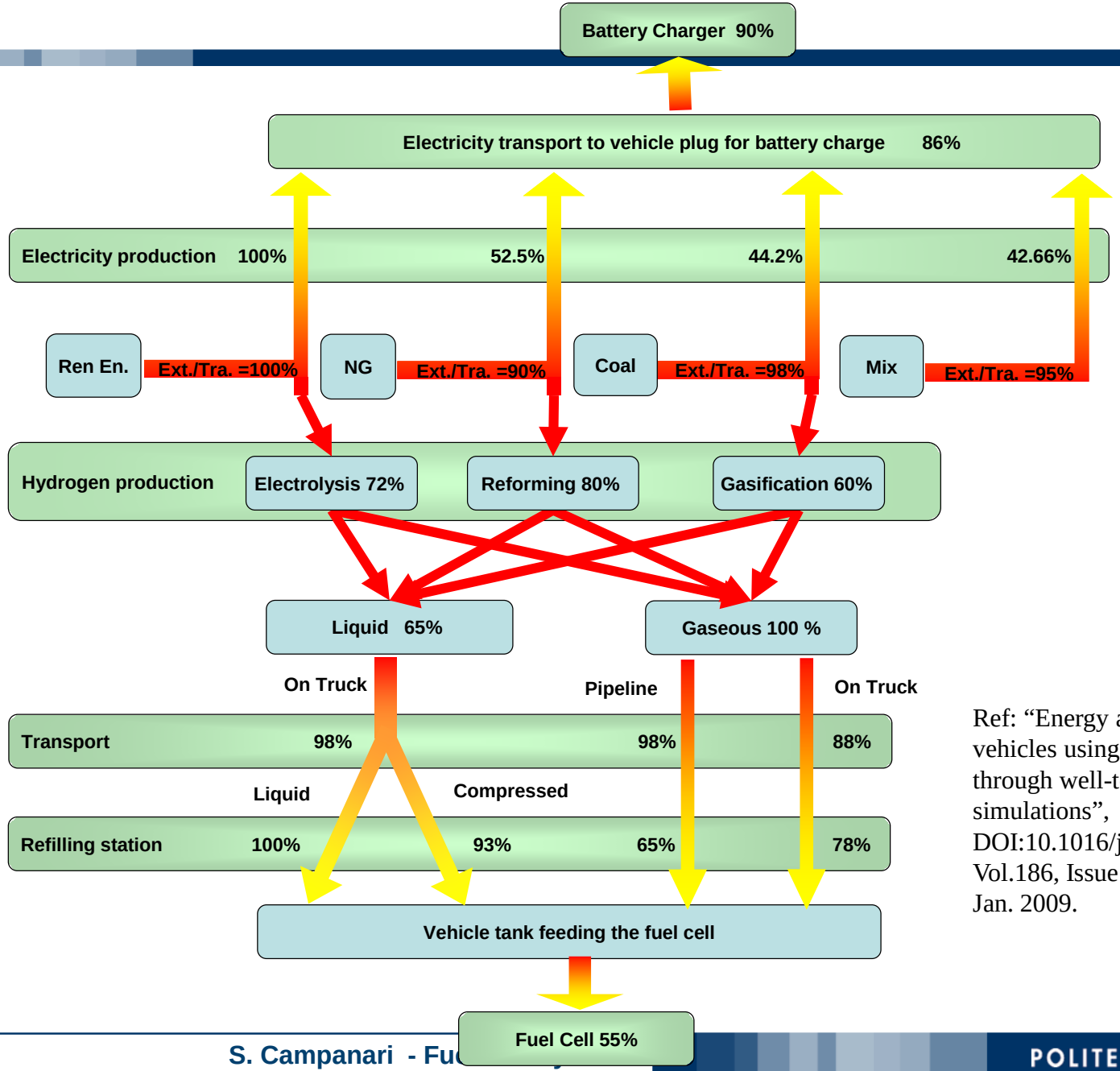

Ref: "Energy analysis of electric vehicles using batteries or fuel cells through well-to-wheel driving cycle simulations", J. of Power Sources, DOI:10.1016/j.jpowsour.2008.09.115, Vol.186, Issue 2, 15, pages 464-477, Jan. 2009.

Other kinds of fuel cells
(a short selection)

Direct carbonate fuel cells (DCFC)

- Using directly a heavy fuel like coal of heavy hydrocarbon mixtures

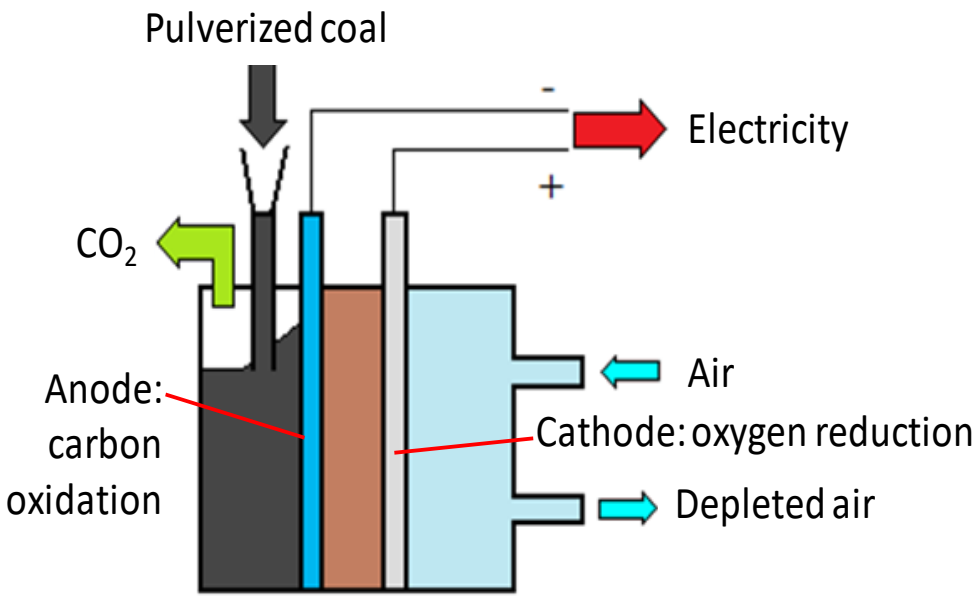

- based on the use, at the anode side (where the heavy fuel is fed), of a "*molten anode medium*" which allows the transport of oxygen from the electrolyte to the carbon-containing fuel, separating in some way the electrolyte surface from the direct contact with the fuel.

Two main categories:

- DCFC based on high temperature, SOFC type fuel cells, using a molten metal (tin) at the anode, also known as LTA-SOFC (liquid tin anode SOFC), performing a metal-based carbon oxidation process also defined "electrochemical looping".
- DCFC based on high temperature, solid oxide or molten carbonate type fuel cells (SOFC or MCFC), using a mixture of molten carbonates at the anode.

Liquid Tin Anode (LTA) - SOFC

- First prototypes at few kW scale for liquid fuels (portable miltary applications)
- Large tin mass flows required for high power plant concepts

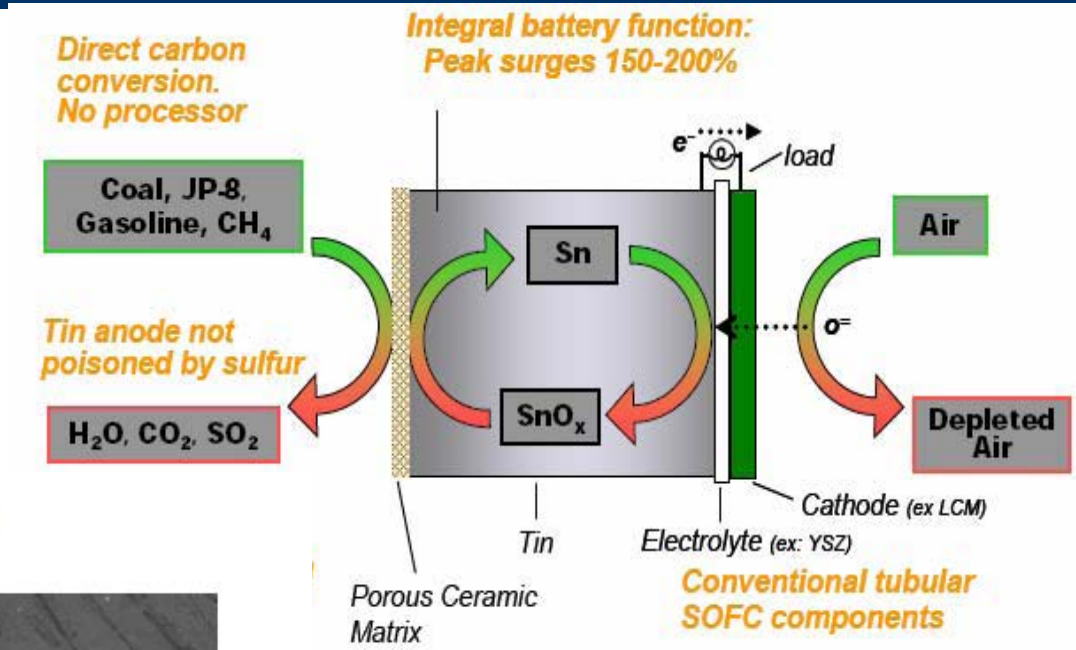

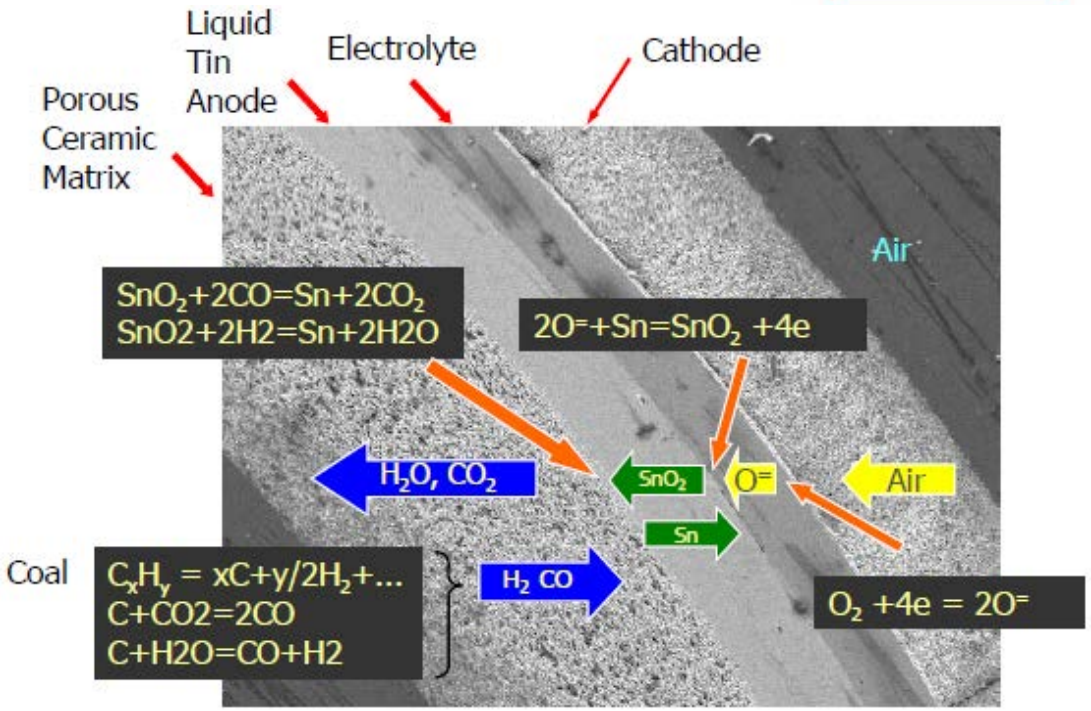

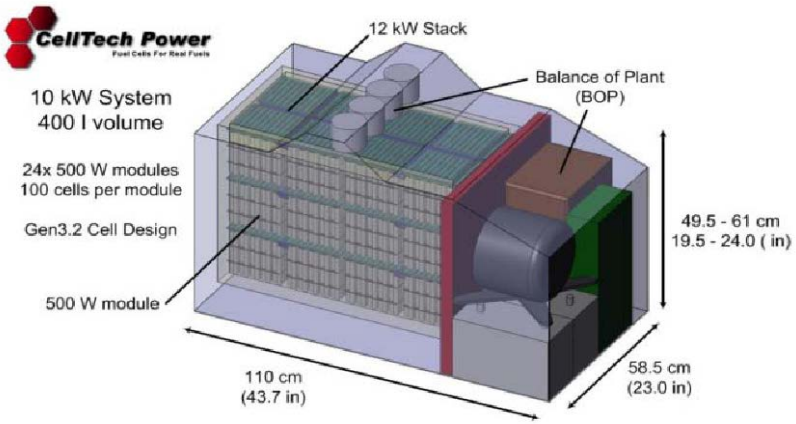

Sodium boro-hydride fuel cells (DBFC)

- Also called Direct borohydride fuel cells (DBFCs), similar to PEM fuel cells, fed with $NaBH_4$ (30-40% solution in water) and H_2O_2

$$\text{Anode}: \quad \tfrac{1}{8}NaBH_4 + \tfrac{1}{4}H_2O = \tfrac{1}{8}NaBO_2 + H^+ + e$$

$$\text{Cathode}: \quad \tfrac{1}{2}H_2O_2 + e^- \rightarrow OH^-; \qquad OH^- + H^+ = H_2O$$

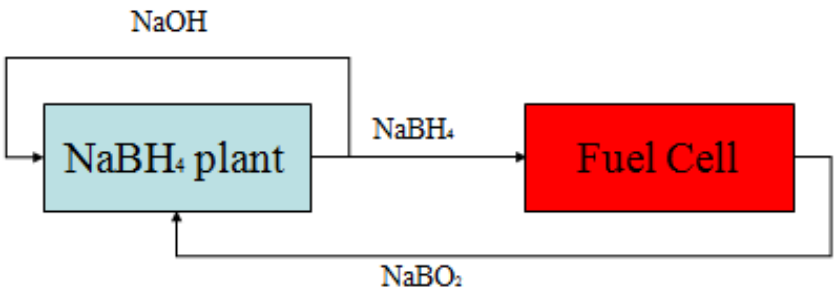

- **Highly promising for air independent operation** (e.g. subsea, space) and possibly for portable applications

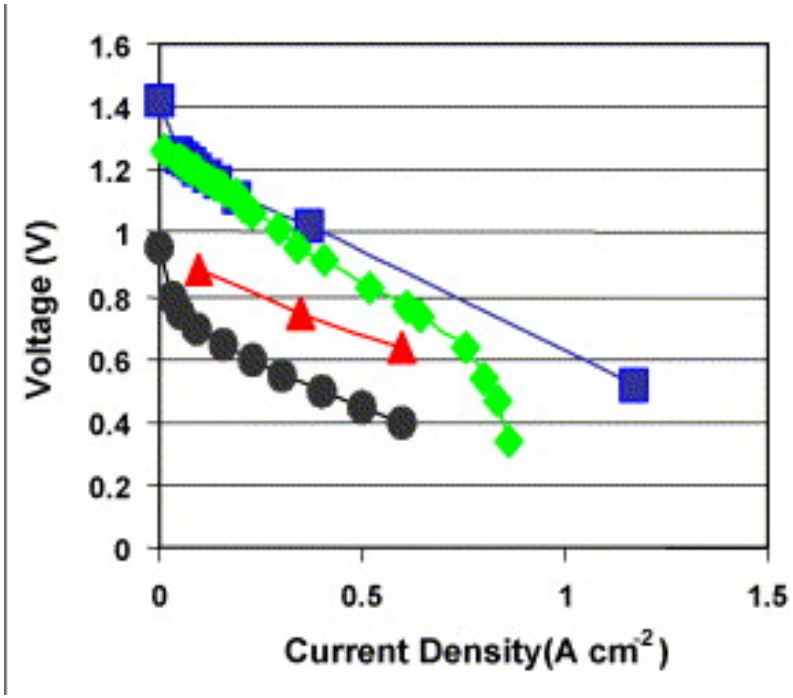

Blue line: $NaBH_4/H_2O_2$; green: H_2/H_2O_2; red: alkaline FC; black: PEM FC.

Direct Formic Acid Fuel Cells (DFAFC)

- Similar to PEM fuel cells, fed with liquid HCOOH (solution in water) and air
- Potential competitor of Direct Methanol Fuel Cell (exhibit higher power density and higher efficiency)

Anode: $HCOOH \rightarrow CO_2 + 2H^+ + 2e^-$ (1)

Cathode : $1/2O_2 + 2H^+ + 2e^- \rightarrow H_2O$

Overall : $HCOOH + 1/2O_2 \rightarrow CO_2 + H_2O$, OCV = 1.48V

Direct oxidation occurs via a dehydrogenation reaction (1), without forming CO as a reaction intermediate (desired reaction pathway, to enhance overall cell efficiency and avoid poisoning of the catalyst).

Another reaction pathway (not desired): formic acid first adsorbs onto the catalyst surface forming adsorbed carbon monoxide (CO) as a reaction intermediate by dehydration; CO is then oxidized to gaseous CO_2 end product. $HCOOH \rightarrow -CO_{ads} + H_2O \rightarrow CO_2 + 2H^+ + 2e^-$

- Fast degradation (poisoning from CO and fuel impurities) / possible need of periodical reverse polarization for electrode cleaning

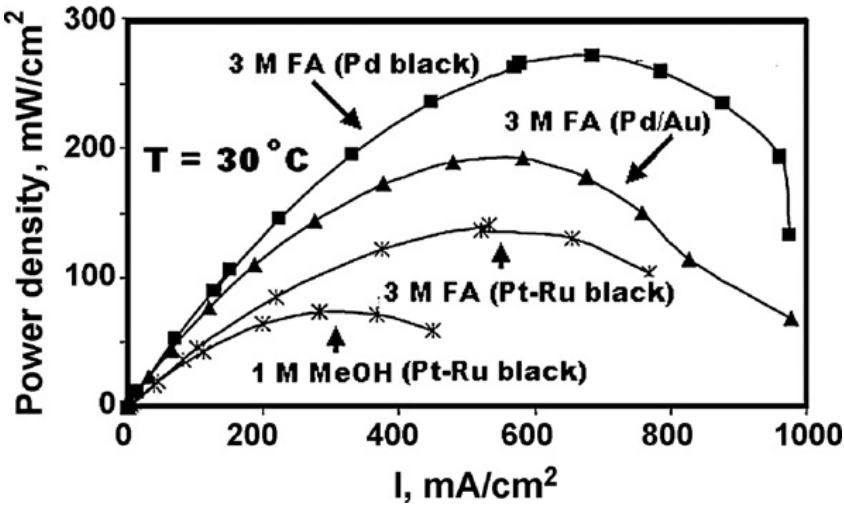

Proton-conductive solid oxide fuel cells (SOFC-H)

Proton conductive perovskites:
Barium cerate $BaCeO_3$ (high proton conductivity: $10^{-2}\ S \cdot cm^{-2}$) + Yr doping
Barium Zirconate $BaZrO_3$ (higher chemical stability) + Yr doping
Induced lattice defects promote H+ (proton) mobility

- R&D ongoing on manufacturing techniques (e.g. co-pressing, spray, PLD)
- Operation at 500-700°C
- Promising performances (e.g. equal or better than SOFC, despite low power density)

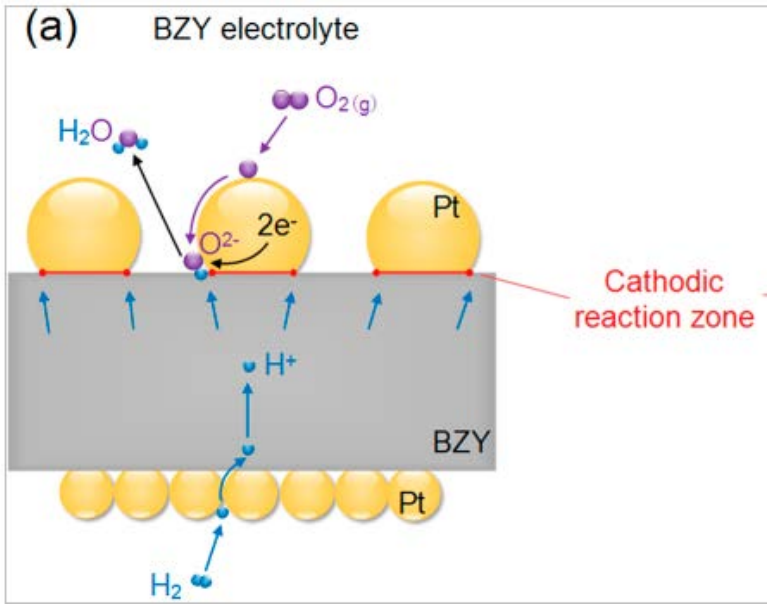

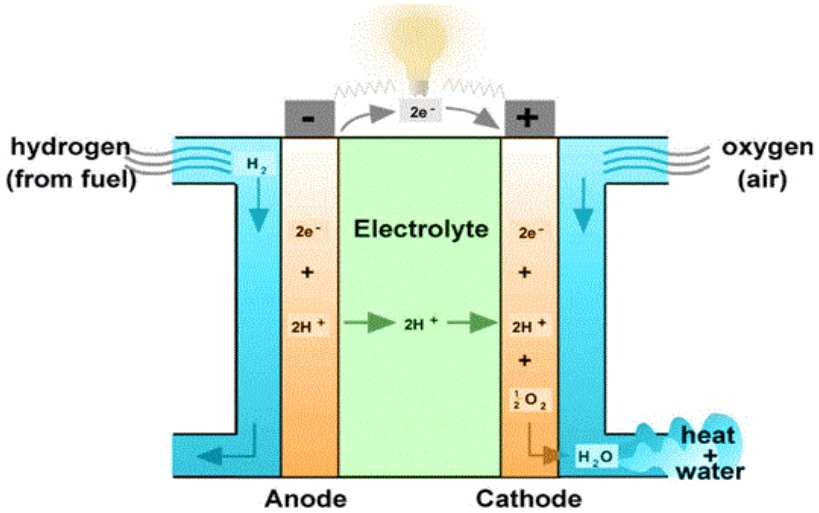

Other SOFCs and hybrid cycles

SOFC: tubular shape (history…)

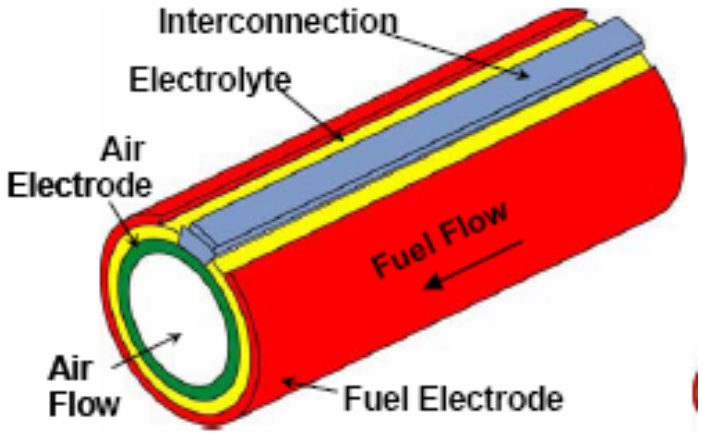

Air is introduced inside the tube, fuel flows externally

Advantages:

✓ seal-less configuration

Disadvantages:

✓ high losses in the circular path along the cathode

➢ *Evolution: development of flat tube shapes*

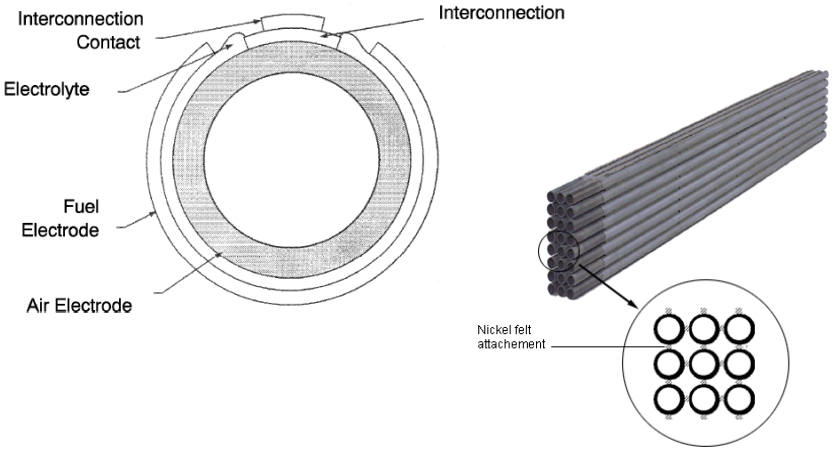

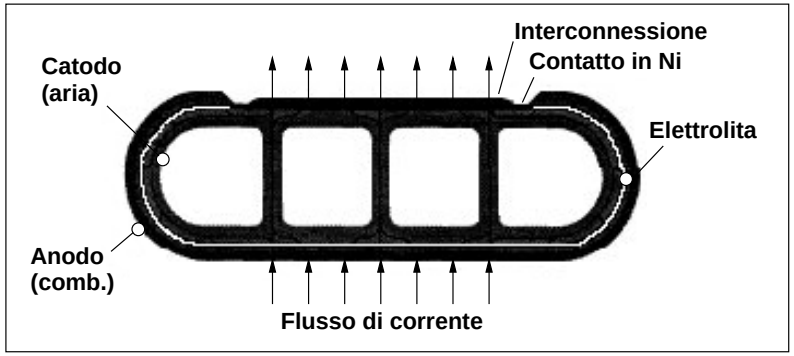

Manufacturers: Siemens-Westinghouse, Mitsubishi (MHI), Acumentrics;
Experimented up to 200 kW scale (S-W) since the late 90's.

Example of tubular SOFC plant (history..)

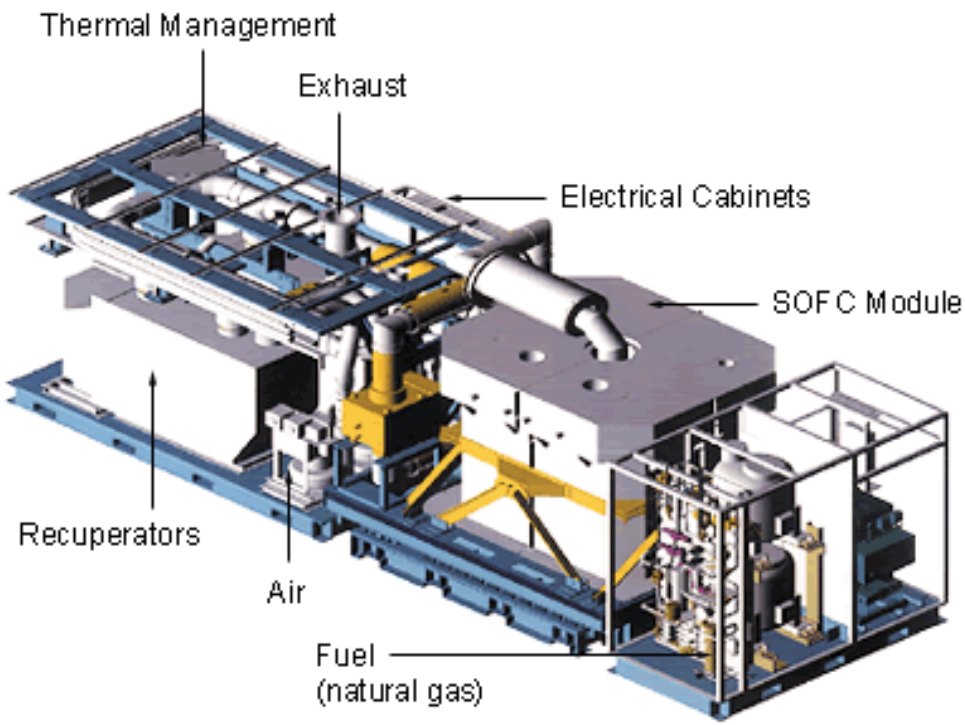

Demo plant by Siemens-Westinghouse, 100 kW (Netherlands, Germany, Italy; over 30000 h of cumulated operation, efficiency 46% with NG)

	Siemens CHP100	Siemens FCT 5
Electric efficiency (AC, LHV)	>46%	42% at 3 kW_{el}
Electric power, AC	110 kW_{el}	3-5 kW_{el}
Thermal power recovered	75 kW	3.1 kW
Total efficiency (LHV)	>80%	>80%
Package dimensions (WxLxH)	n.a.	1.2x0.8x2.1 m

SOFC: evolution of the tubular shape (history)

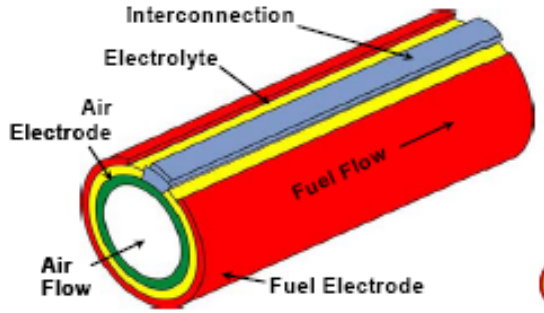

Cylindrical (Present)

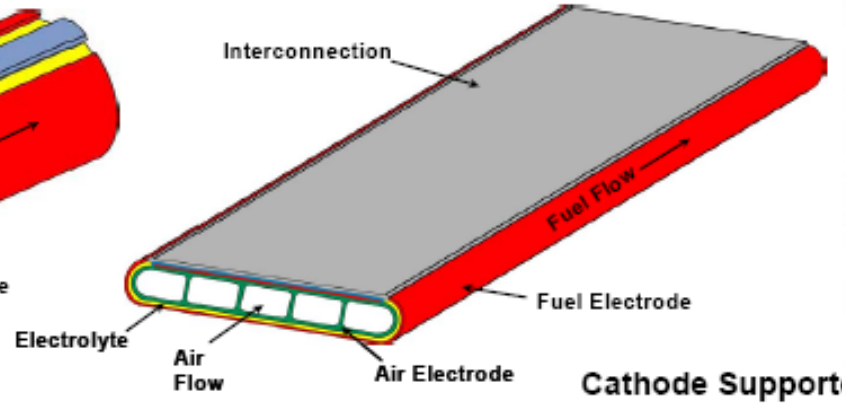

Cathode Support Seal-less Planar

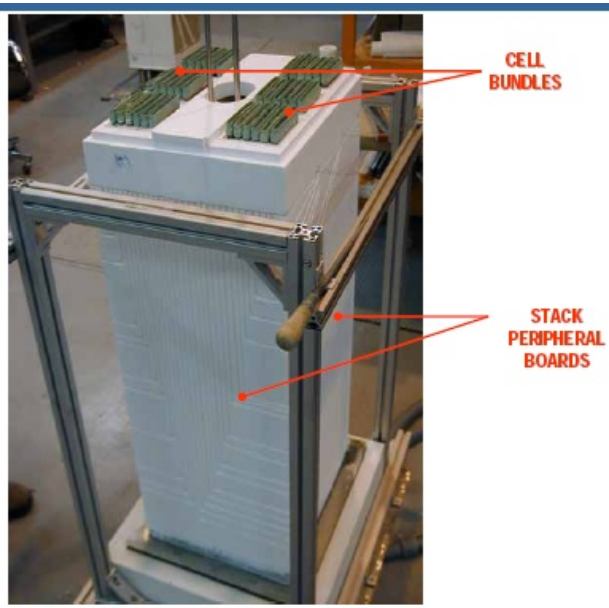

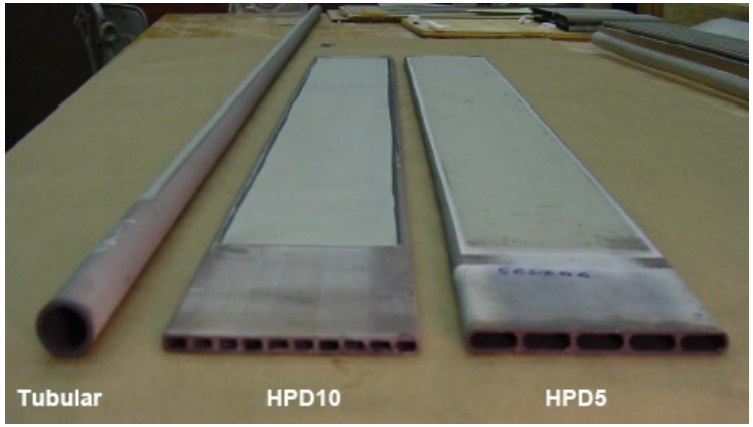

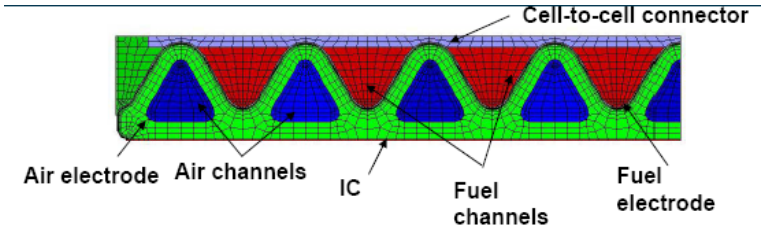

Other evolution of tubular SOFCs

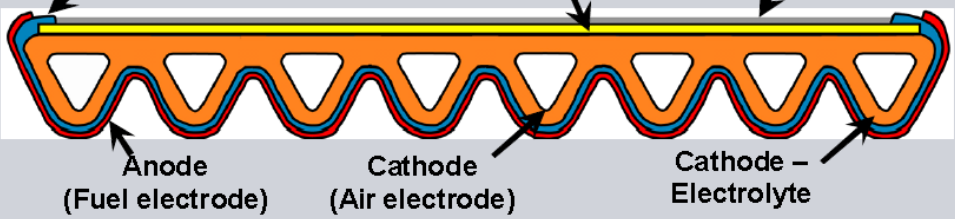

Delta 8 Cell Materials	
Component	**Material**
Cathode (Air Electrode)	Doped lanthanum manganite
Electrolyte	Scandia stabilized zirconium oxide
Interconnection	Doped lanthanum chromite
Anode (Fuel Electrode)	Nickel – zirconium oxide cermet
Plating	Nickel

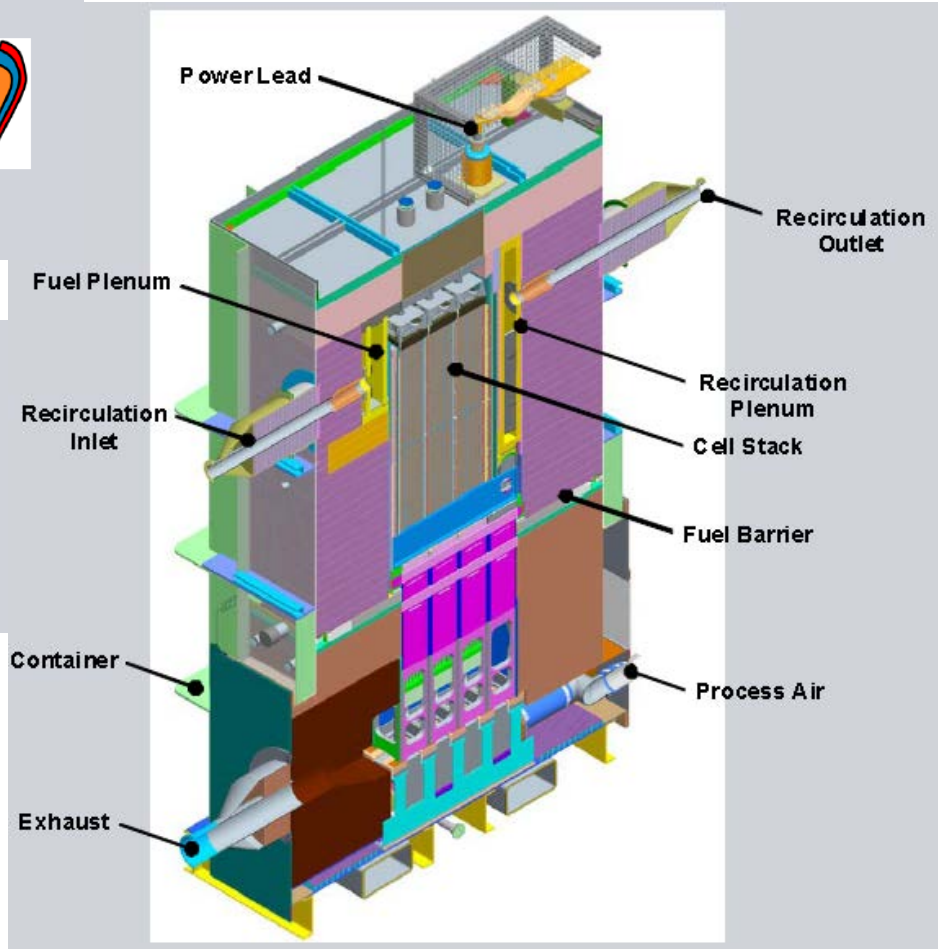

Other tubular shape for micro-CHP applications

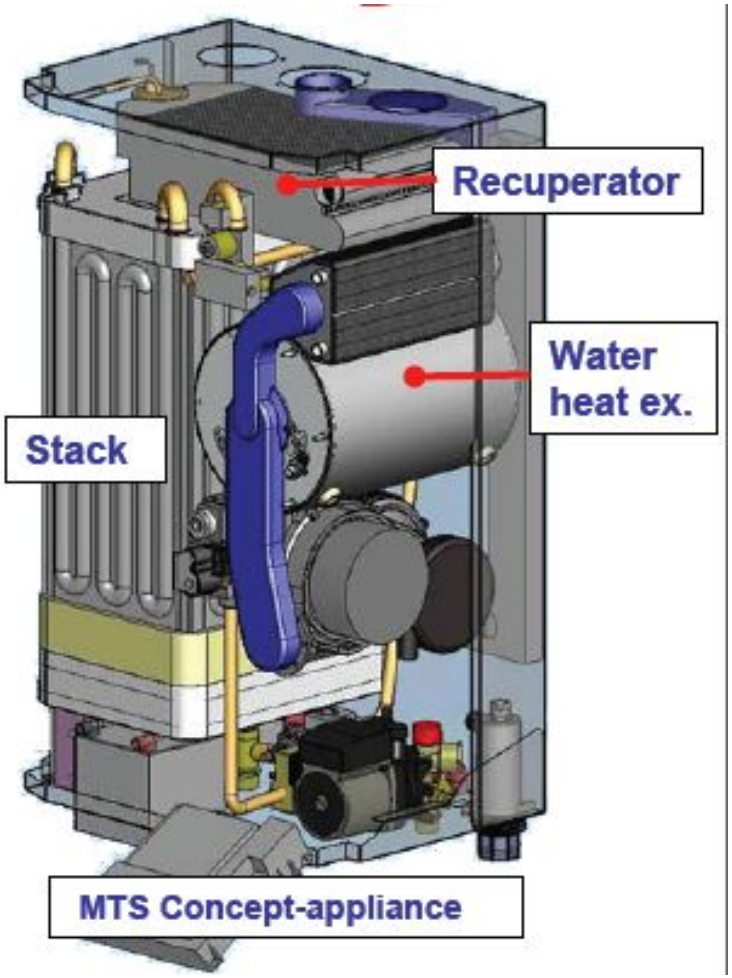

Micro-CHP 1 kW unit, based on tubular SOFC s from Acumentrics, assembled to substitute wall-hanging boilers (MTS);

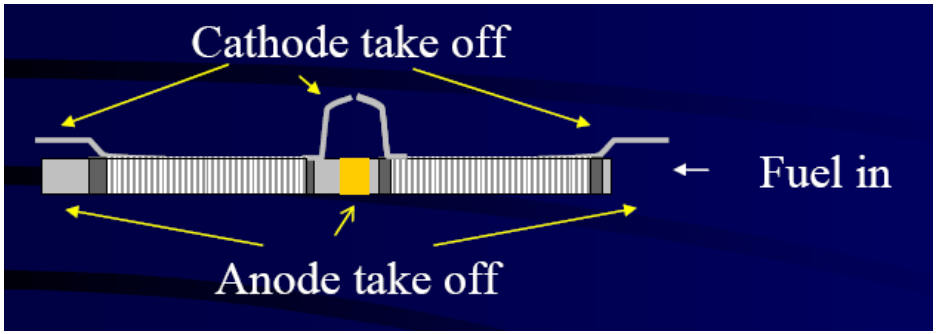

Example of tubular Acumentrics SOFC with single or multiple current take-off , anode supported

Ex. of production (Acumentrics, tub. anode supported)

Anode Tube Extrusion

Anode Tube Extrusion

Anode Tube Bisque Firing

Anode Tube Bisque Firing

Electrolyte Deposition

Cathode Coating Operation

Copyright 2005 Acumentrics Corporation

SOFC alternative shapes: monolithic

The active layers are corrugated in “honeycomb” style, creating channels for the reactant flowpath.

Advantage:

✓ higher mechanical strenght, built-in chann

Disavantage:

✓ necessity of peripheral sealing

✓ difficult manufacturing

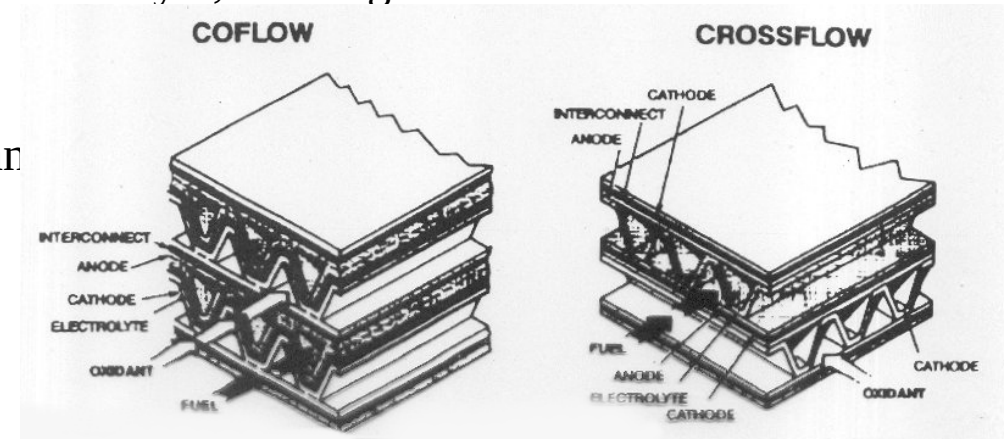

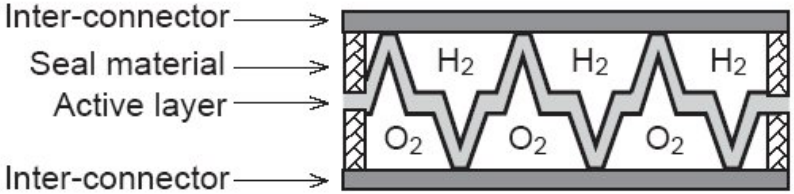

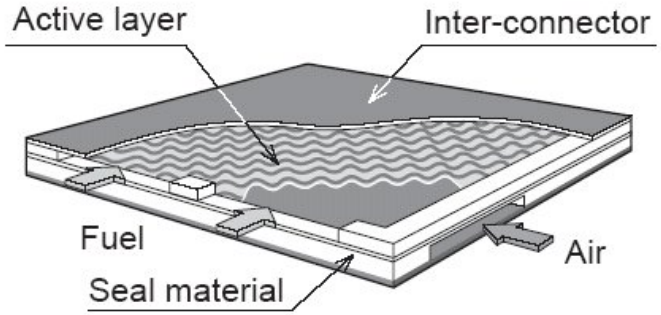

Fig. 9 Structure of MOLB Type SOFC

Indicates the appearance and sectional structure of MOLB type SOFC

Manufacturers: Allied-Signal Aerospace Company -Argonne National Laboratory, Mitsubishi; experimented up to kW scale.

SOFC alternative shape: “integrated planar”

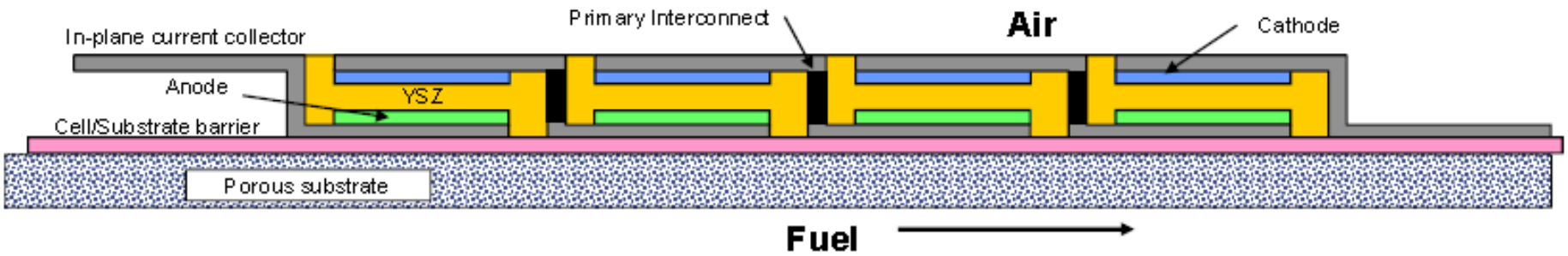

Integrated planar series arrangement: series connected cell design for high voltage and low current (cheaper power electronics to convert low current DC to AC).
Low currents give low Ohmic losses offering wider material options; use of thin layers to minimize cost. High fuel utilization can be applied without affecting all cells.

Ceramic support material $MgO+Al_2O_3$ powder + extrusion

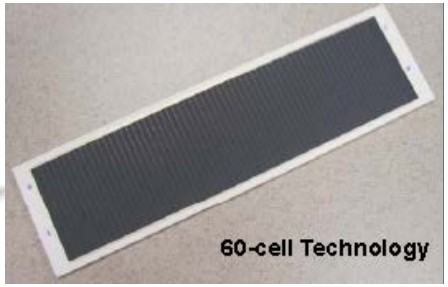

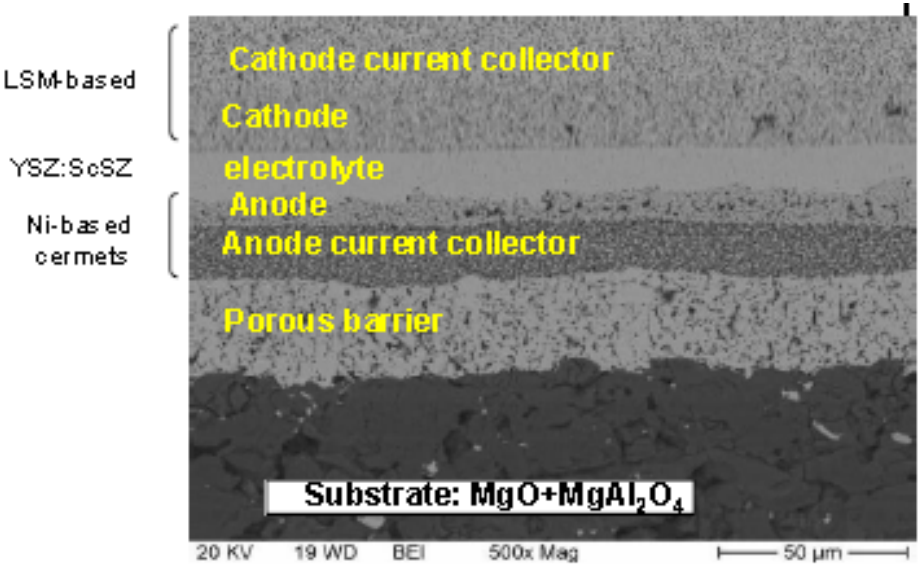

Manufacturers: Rolls-Royce, LG; experimented up to 125 kW

Ex. of production and assembling principles (Rolls Royce)

SOFC alternative shape: Hexis type

Circular-planar shape ("Heat Exchanger Integrated Stack") with:
- central fuel feeding
- external air feeding
- intermediate path for air preheating (promotes uniform temperature)

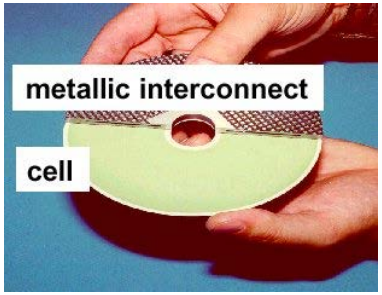

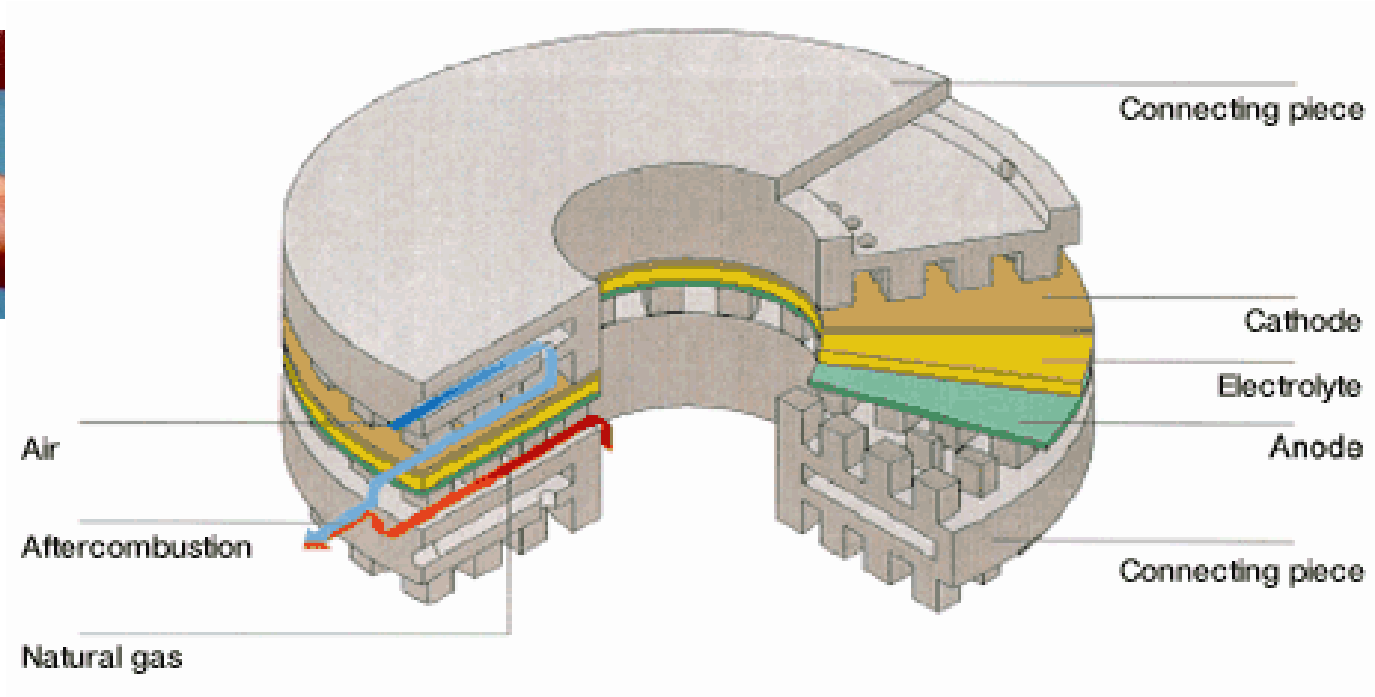

Manufacturer: Sulzer / Hexis; experimented on kW-scale modules

Type “Hexis” (Sulzer) for micro- CHP

Sulzer 1 kW module (33% efficiency)

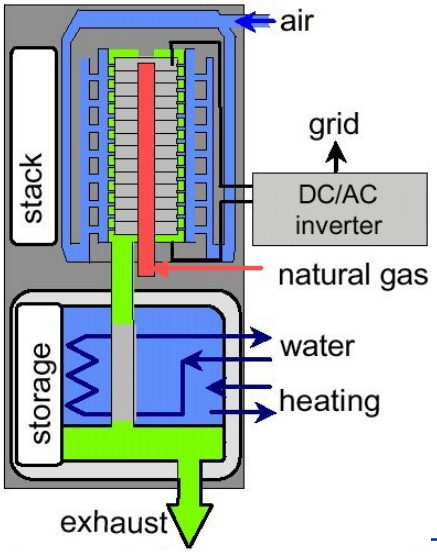

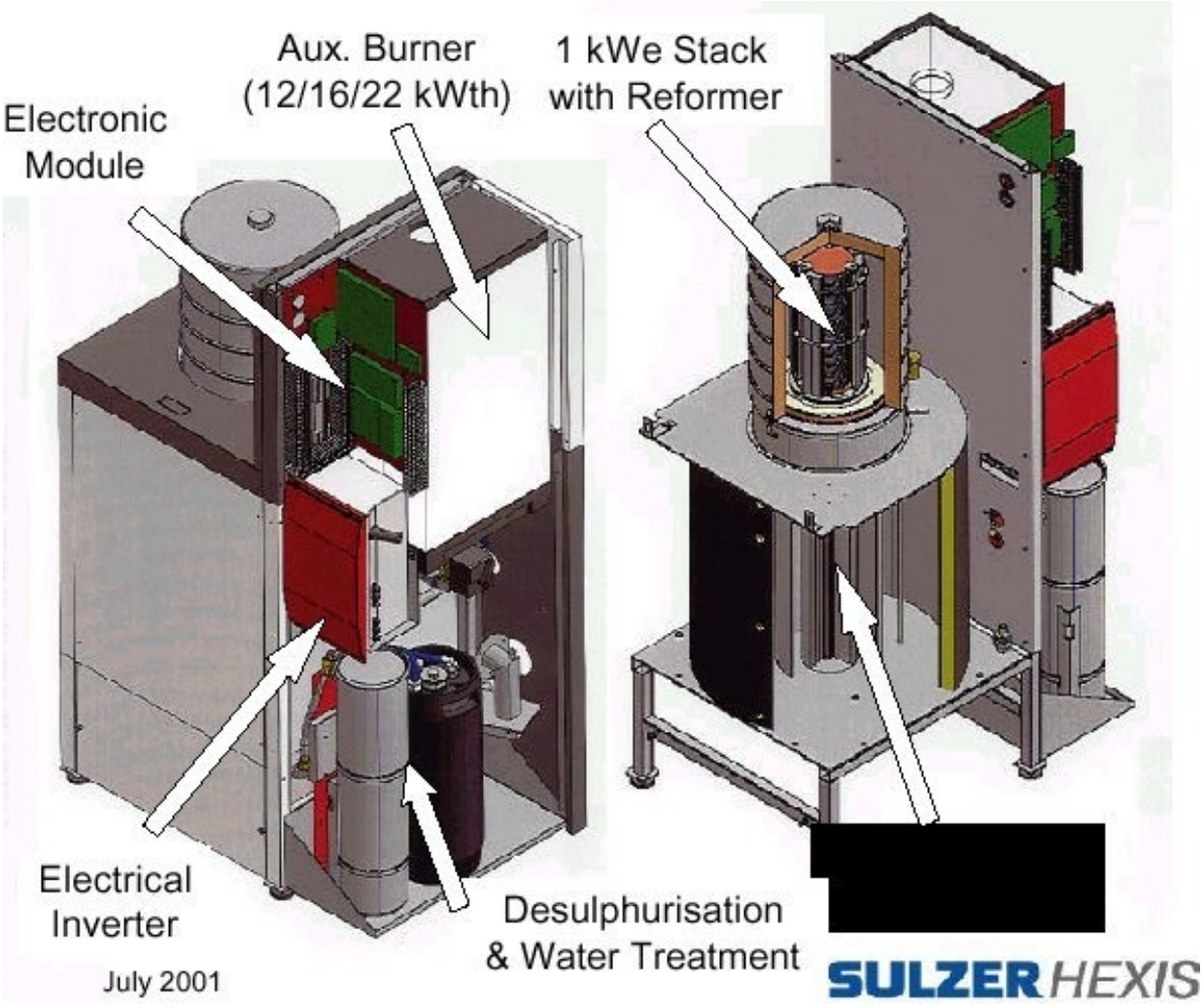

SOFC: other examples of R&D on CHP systems

Wartsila (with Haldor Topsoe) SOFC system

•Planar IT-SOFCs operating at 750°C

•Power output 20-50 kW, expected electrical efficiency 42-45% from NG, integrated reformer , total efficiency about 80%.

• First protoype 20 kW, operating in 2007

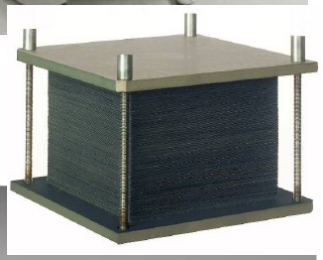

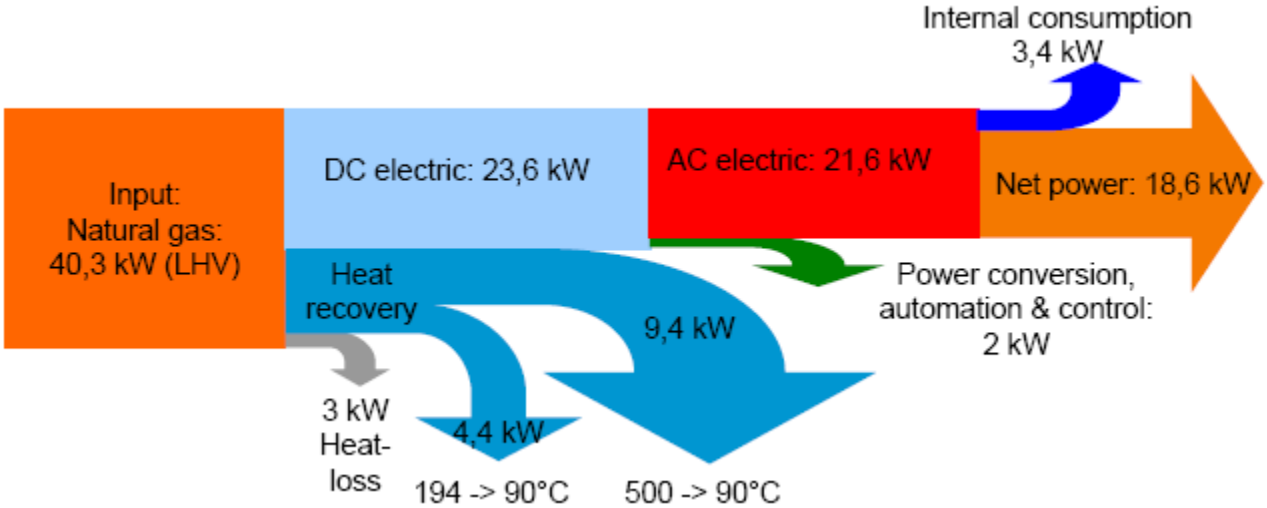

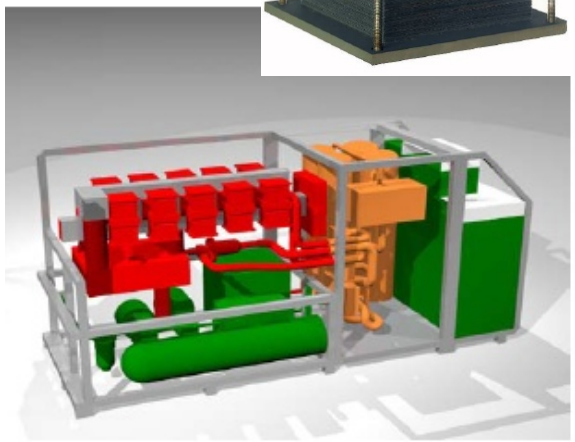

SOFC: R&D on CHP systems

SOFC FCE system, R&D under US-DOE SECA Project

- Planar IT-SOFCs operating at 750-800°C
- Power output 3-5 kW, efficiency 37-38% (from NG), integrated reformer
- Estimated cost < 1000 /kW for mass production

Package FCE 5 kW (2007)

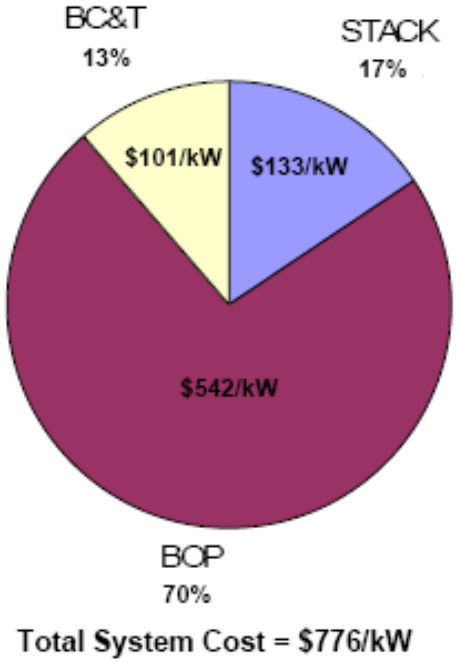

Production cost estimate 50000 pc/y

Stack 5 kW

Sub-stack 1 kW (28 cells, 121 cm^2 each)

FC Hybrid cycles: background thermodynamic analysis

The **inlet** airflow and the **outlet** exhaust gases from a HTFC transport **large** energy flows.
Example for an atmospheric SOFC module @ 1000°C:

- 51.5% of inlet energy (more than the fuel!) and 72.6% of exiting energy
- 33% of the reversible work entering the system, 52.4% of the reversible work exiting

→ It is important to design around the HTFC module an efficient heat recovery and preheating system, especially for pressurized operation.

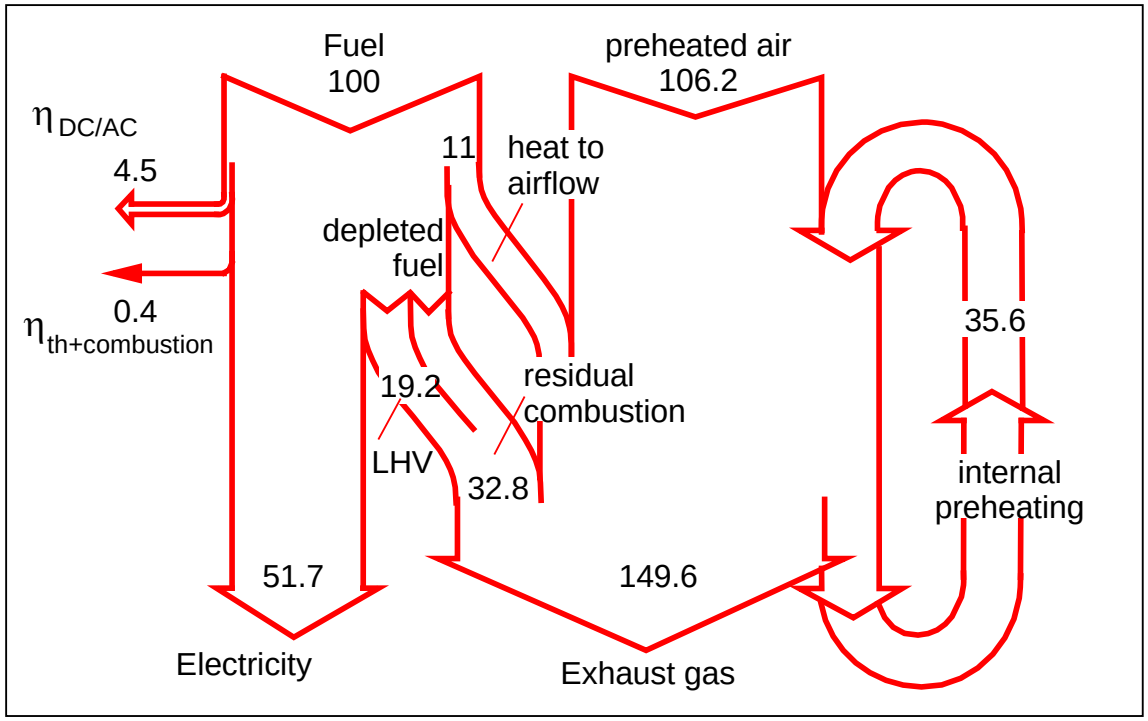

Example of energy balances for a 51.7% el. efficiency SOFC operating at 1000°C (numbers referred to fuel LHV)

FC hybrid cycles: thermodynamic advantage of SOFC and hybrids

Elimination of combustion losses – oxidation is carried out through an electrochemical process

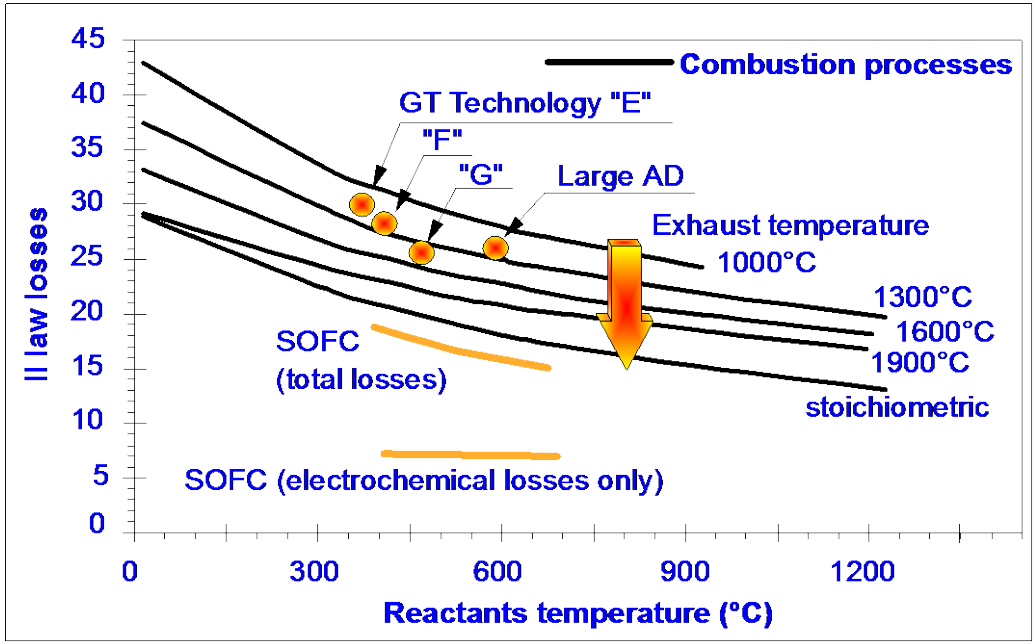

- The GT cycle TIT is no longer a key parameter: possibility of using uncooled turbines.
- Increasing a hybrid cycle TIT with a combustion process does not increase efficiency

Simulations show the following results:

- ✓ 4:1 (or more) SOFC / GT power ratio
- ✓ Potential efficiency up to 65-70% on small plant sizes (300 kW- 1 MW)
- ✓ Long-term potential efficiency up to 75+% on larger sizes (100 MW)

SOFC hybrid cycles: example of proposed plant layout - 2

Layout without heat exchangers (Rolls-Royce)

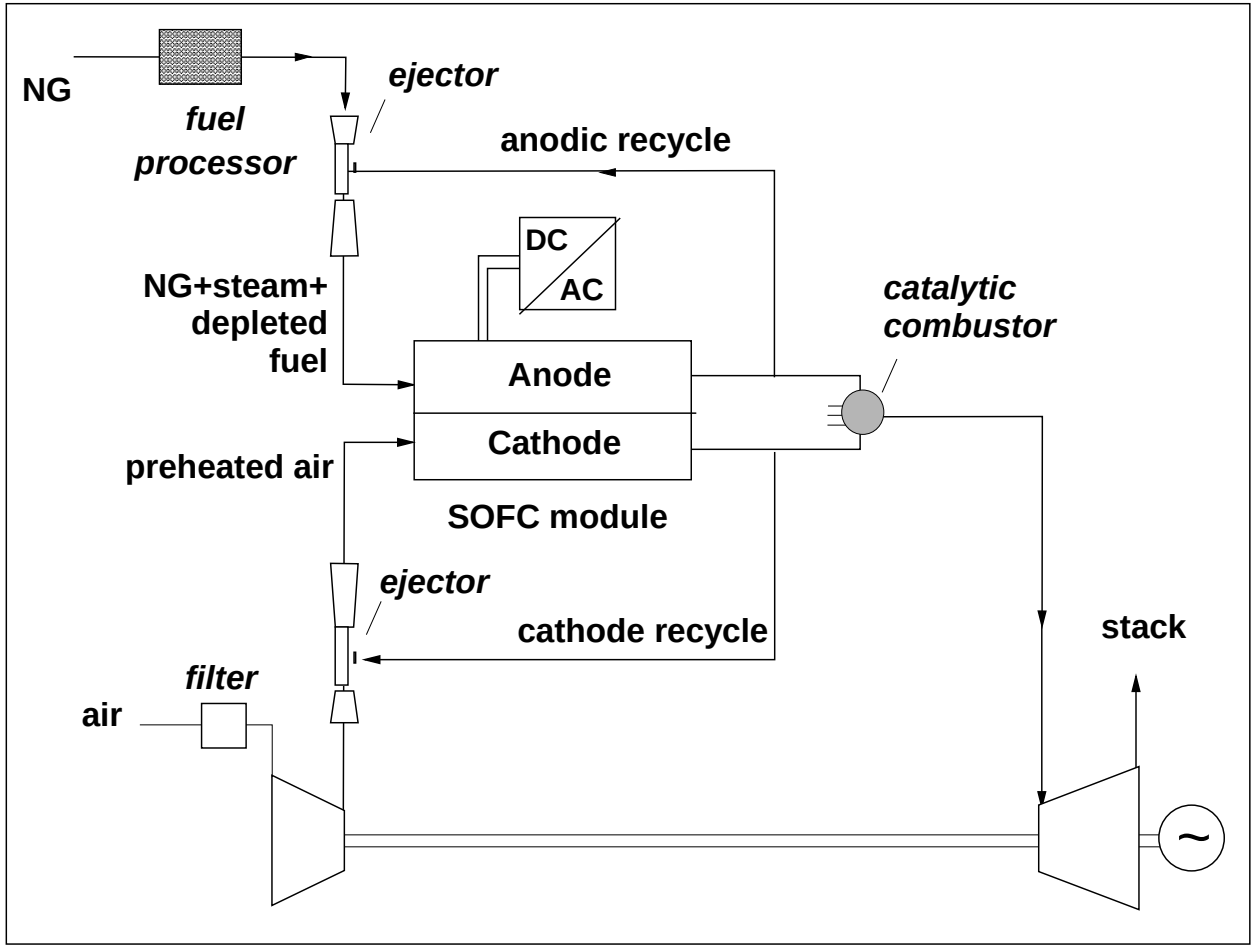

- High temperature heat exchangers are substituted by ejectors where the FC inlet reactants are mixed with outlet streams
- Compressor PR is increased to have higher air temperature to the FC
- Reduction of plant size and costs
- Drawbacks in plant management at part load, constraints on PR

Rolls Royce 1 MW demo plant (ongoing)

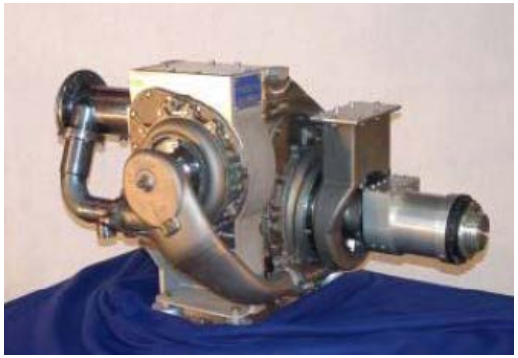

Turbogenerator

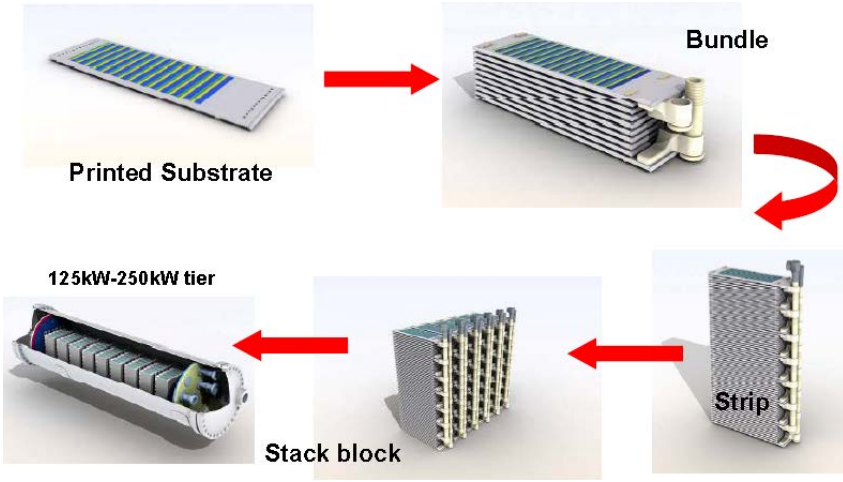

Multi-stage SOFC hybrids

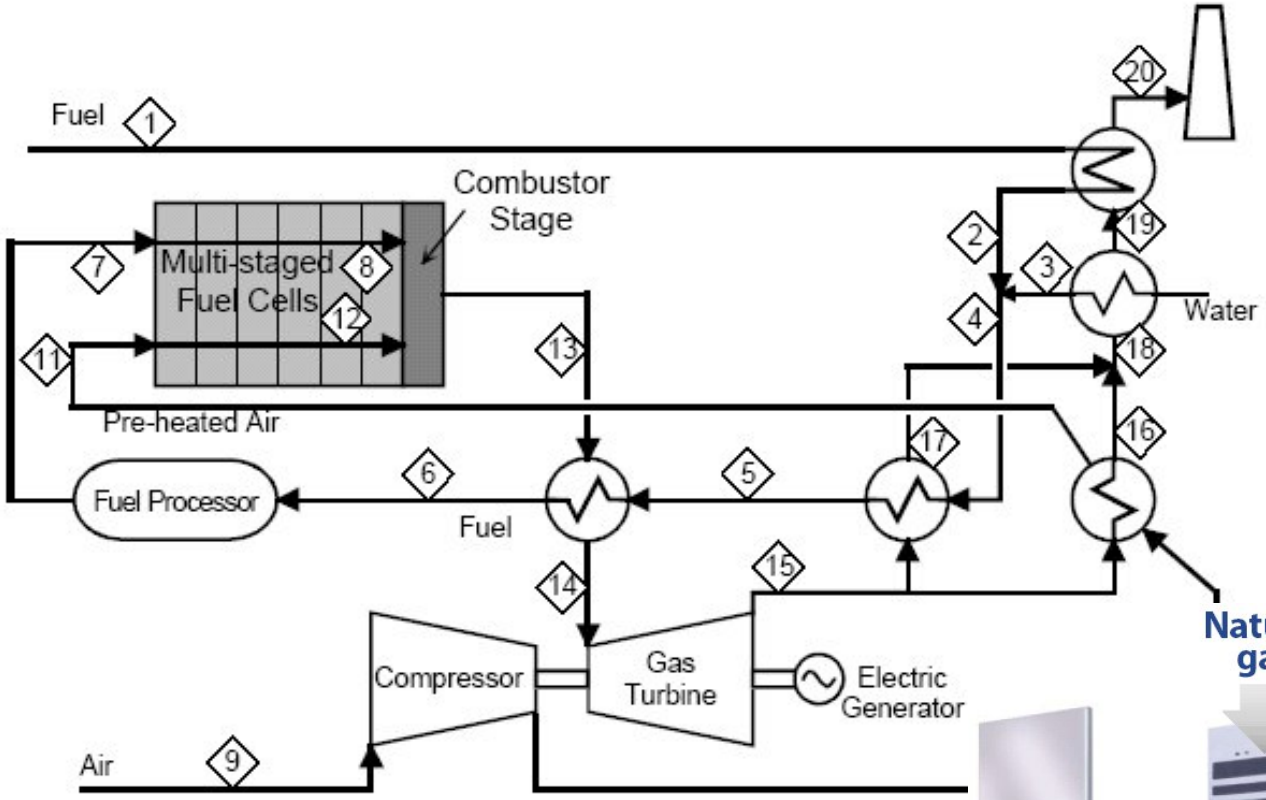

- Multi-stage FC allows higher Uf while keeping high voltage
- More difficult manufacturing and cell connection

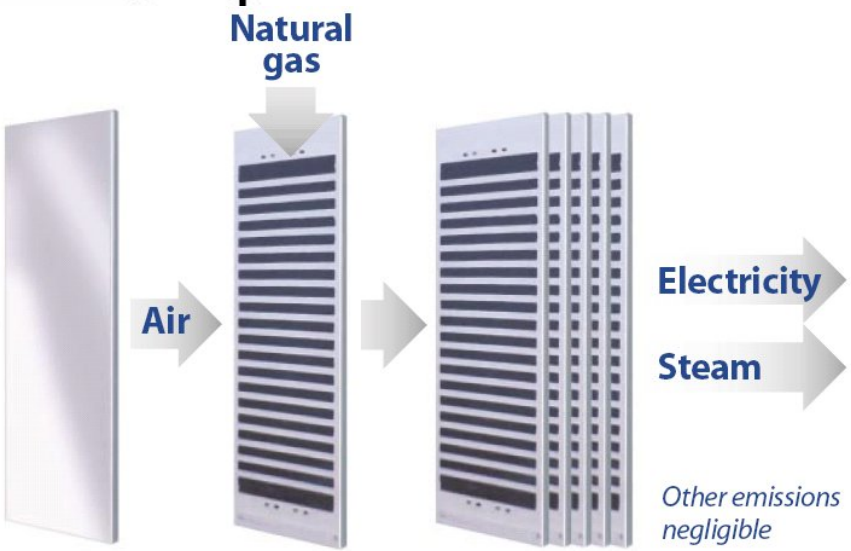

Examples of MCFC plants – (former experiences)

Plants by FCE Solutions - Ex- MTU – OnSite Energy (250 kW)

About 20 installed plants, some reached >25000 h of operation

Emissions NOx < 9 mg/MWh

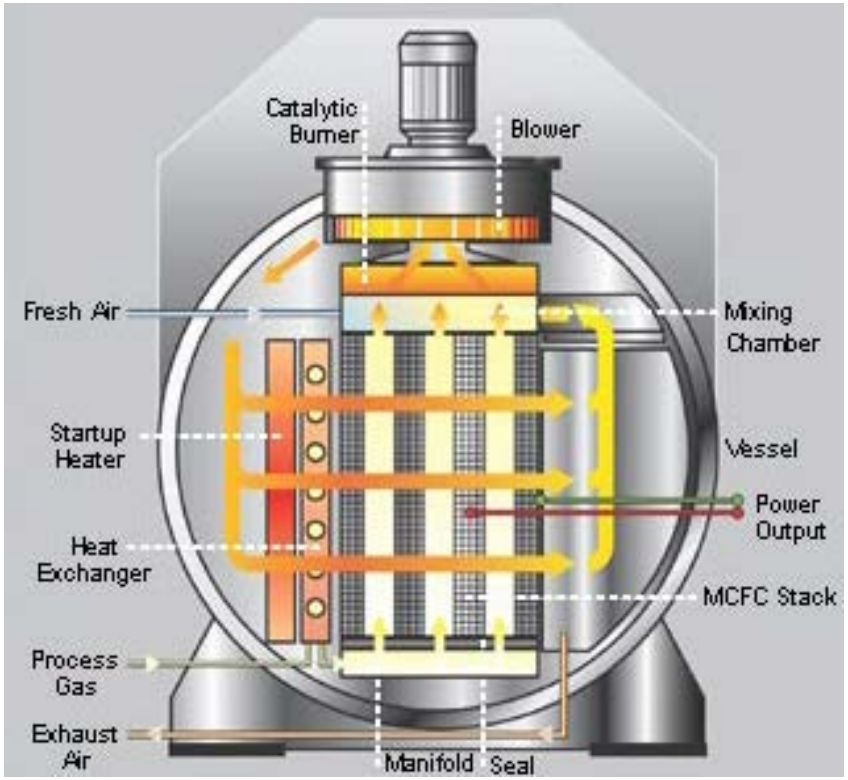

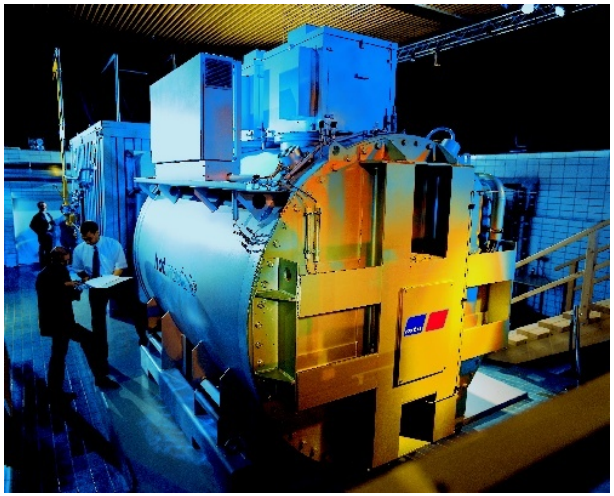

Rhoen Klinik, 300 kW

- Ansaldo Fuel Cell (AFCo) has developed until 2011 a proprietary MCFC technology, relying on indirect reforming of natural gas, with some relevant plant installations

Hybrid MCFC cycle – history (2)

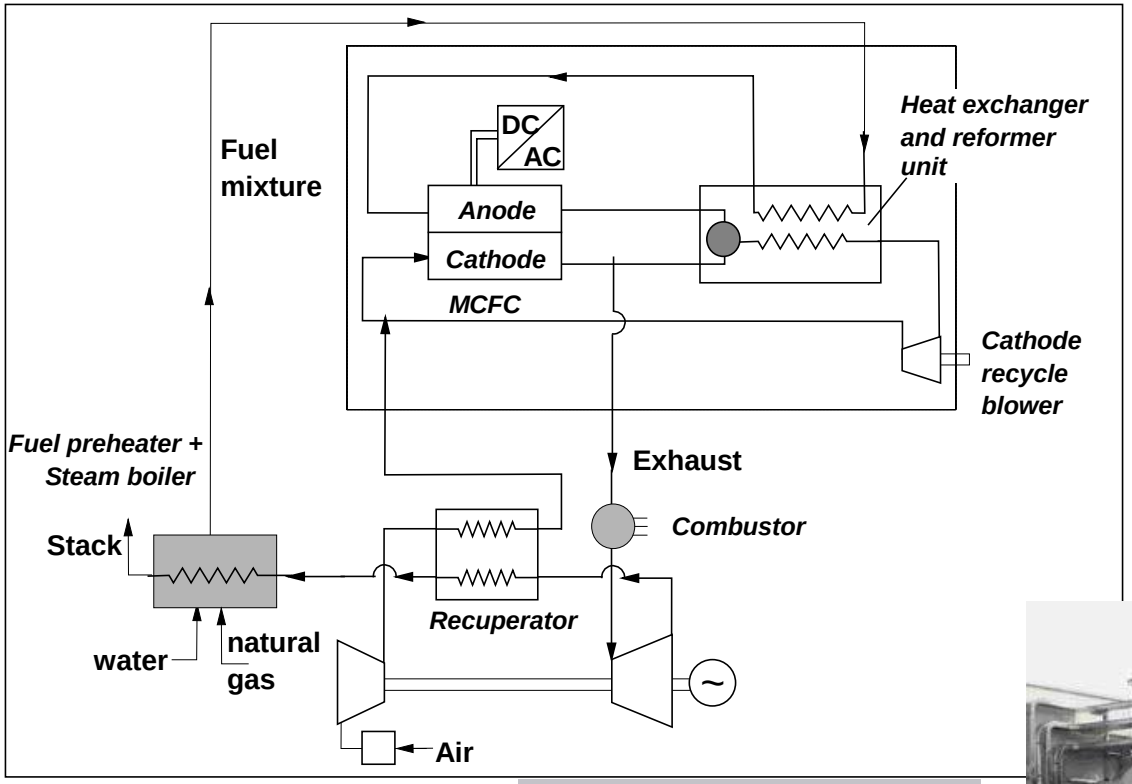

Ansaldo Fuel Cell plant

- MCFC + gas turbine, natural gas feeding; 2 modules MCFC @ 125kW each

- Regulated output 5-250kW;

> 12000 operating hours (at FN SpA - Bosco Marengo).

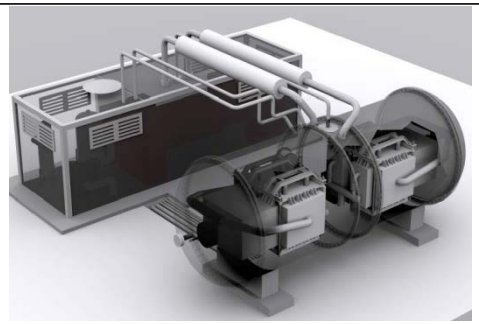

Recuperated cycle with pressurized MCFC (AFCo, 500 kW class), 2005-2009

Perspectives:

potential application to power cycles with Carbon Capture and Sequestration (CCS)

Potential application to power cycles with CCS

Why FC with CCS?

•Both SOFCs and MCFCs can be applied to power cycles aimed to carbon capture and storage (CCS) from natural gas or syngas (e.g. from coal gasification).

•The high CO_2 concentration at cell anode oultet gives an advantage in a cycle arrangement where CO_2 is separated from the anode exhaust stream.

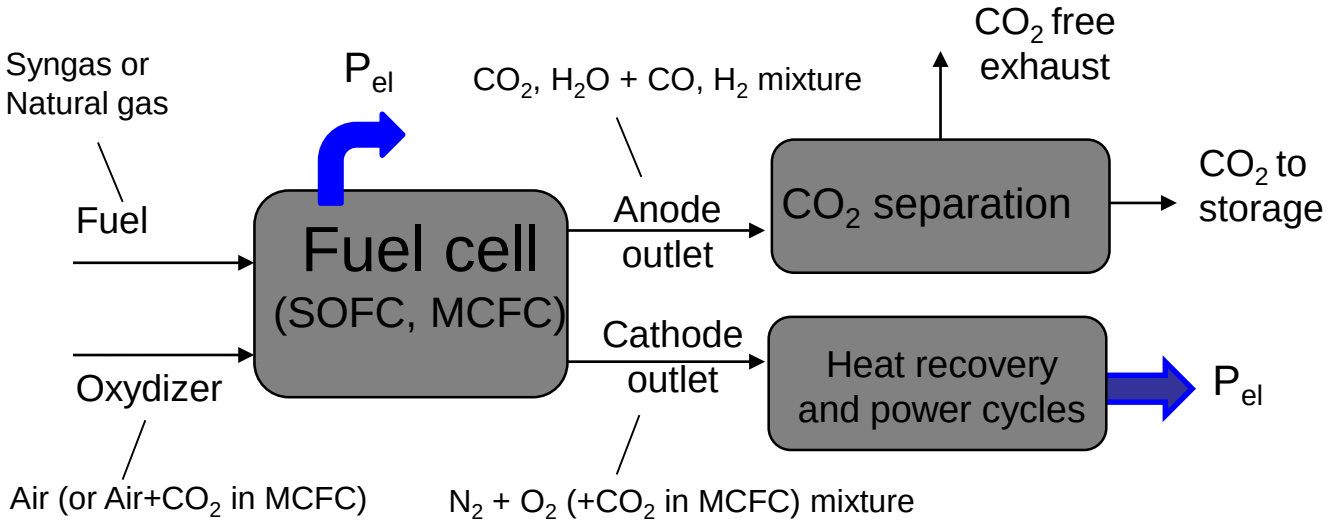

- ✓ Most conceptual layouts rely on a fuel cell power cycle with syngas/NG feeding and "post fuel cell" CO_2 capture with oxy-combustion, physical or chemical separation techniques (or a second SOFC).
- ✓ The FC typically generates the majority (e.g. 80%+) of plant power⇒ totally dependent on FC commercial competitivity

Example: SOFC hybrid cycle with CCS

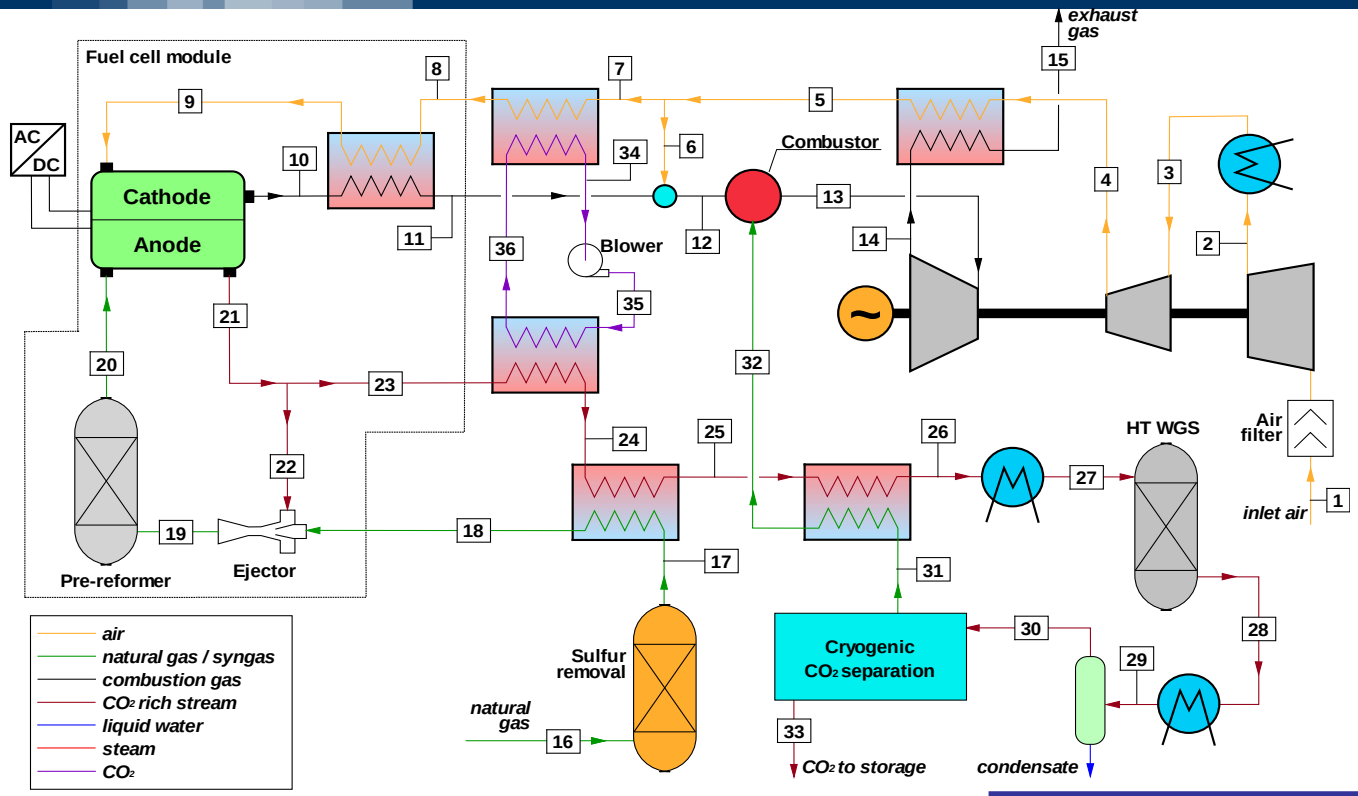

Plant Performance	Pressurised plant (SOFC+GT)	
CO_2 capture	no	yes
Fuel Cell net power [MW]	68.06	68.06
GT net power [MW]	10.71	5.6
aux electric power [MW]	-0.03	-2.83
overall net power [MW]	78.74	70.82
net electric efficiency LHV [%]	78.74	70.82
LHV efficiency penalty [% points]	-	-7.92
Carbon capture ratio [%]	-	82.92
SPECCA [MJ kg_{CO2}^{-1}]	-	2.42

MCFC conceptual plant configurations

MCFC allow also a different approach: the FC is placed downstream a (generic) combustion process releasing exhaust gases with CO_2; MCFC acts as "active CO_2 concentrator"

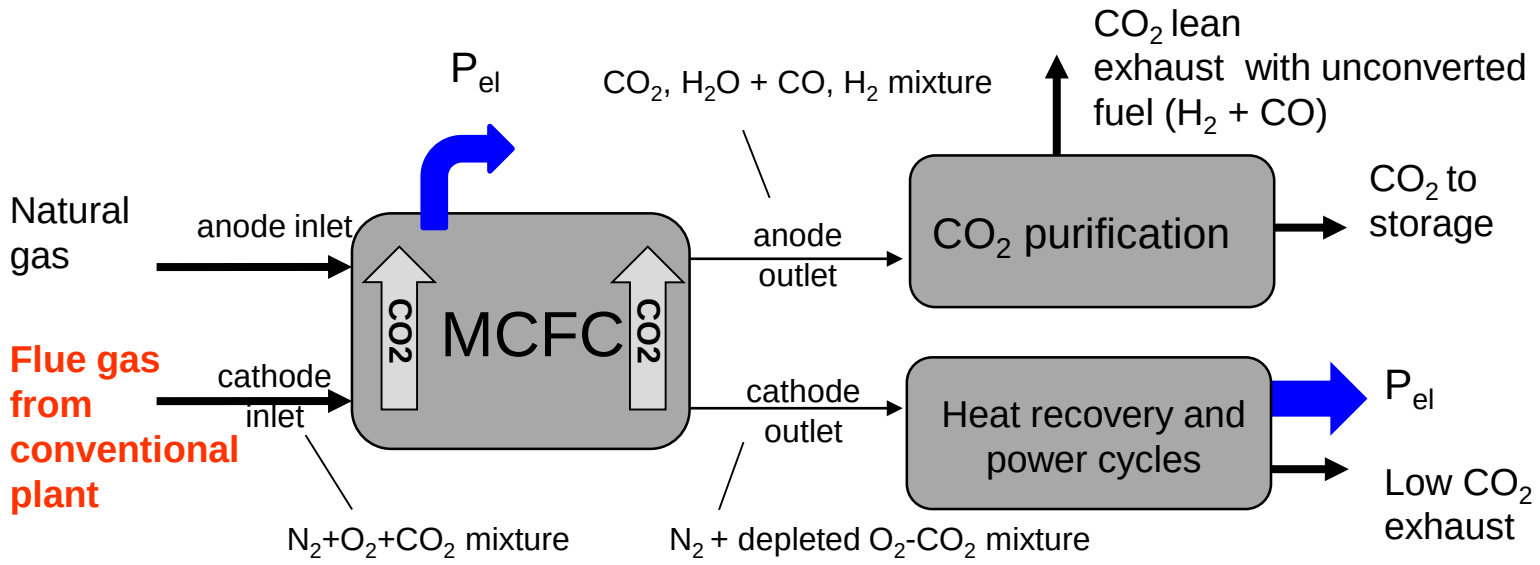

Results:

(+) Low efficiency loss (e.g. 1.5-4%) with respect to the same cycles without CO_2 capture (less than half of competitive technologies)

(+) Lower fraction of FC power (e.g. 20-30%) on overall plant balances

Example: integration MCFC – combined cycle

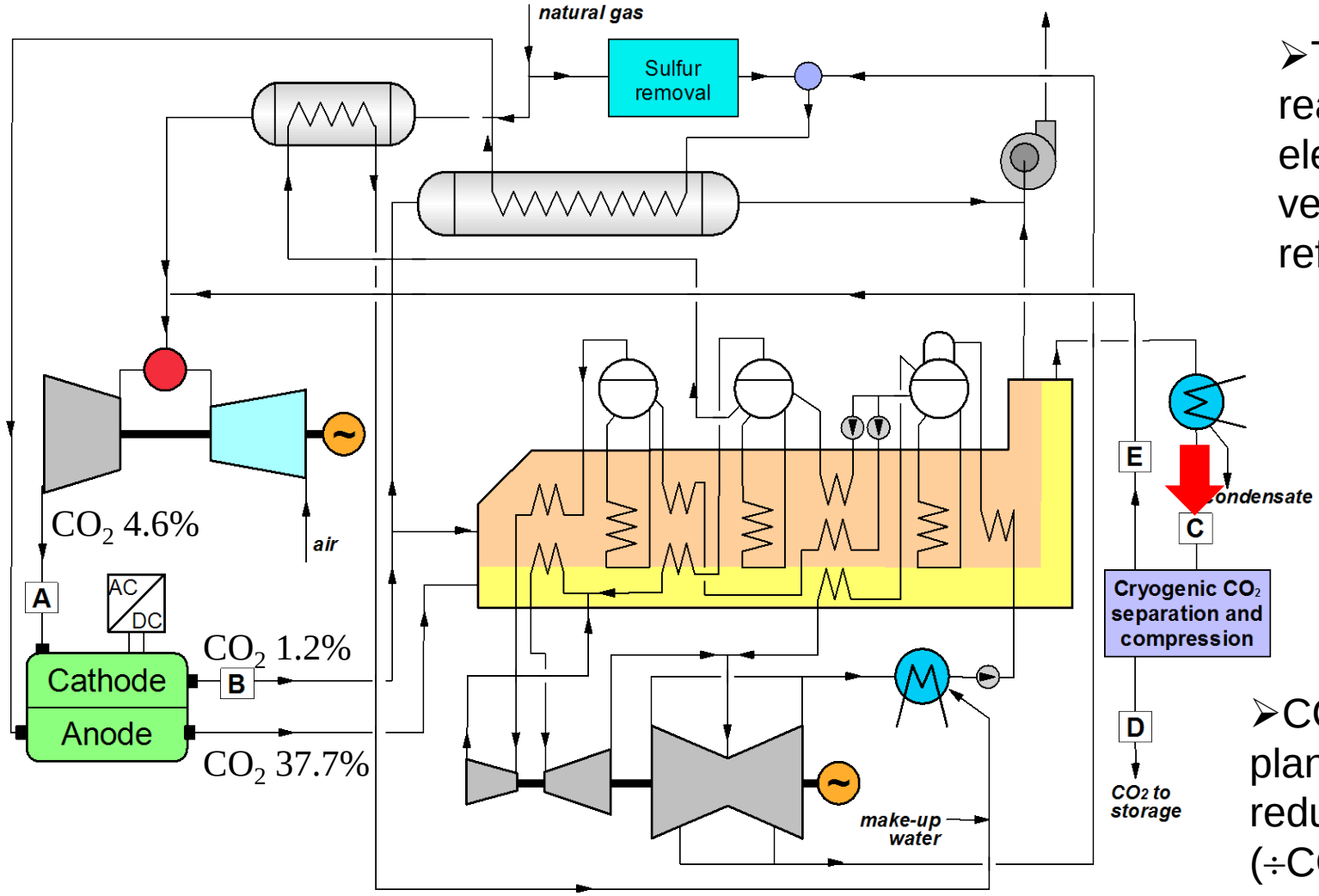

- The cycle reaches a net electric efficiency very close to the reference CC
- The MCFC generates 20% of the power output
- CO_2 emissions at plant stack are reduced by 70-80% (÷CO2 utilization)

DOI: 10.1016/j.ijhydene.2010.09.068.

Possible conceptual layout

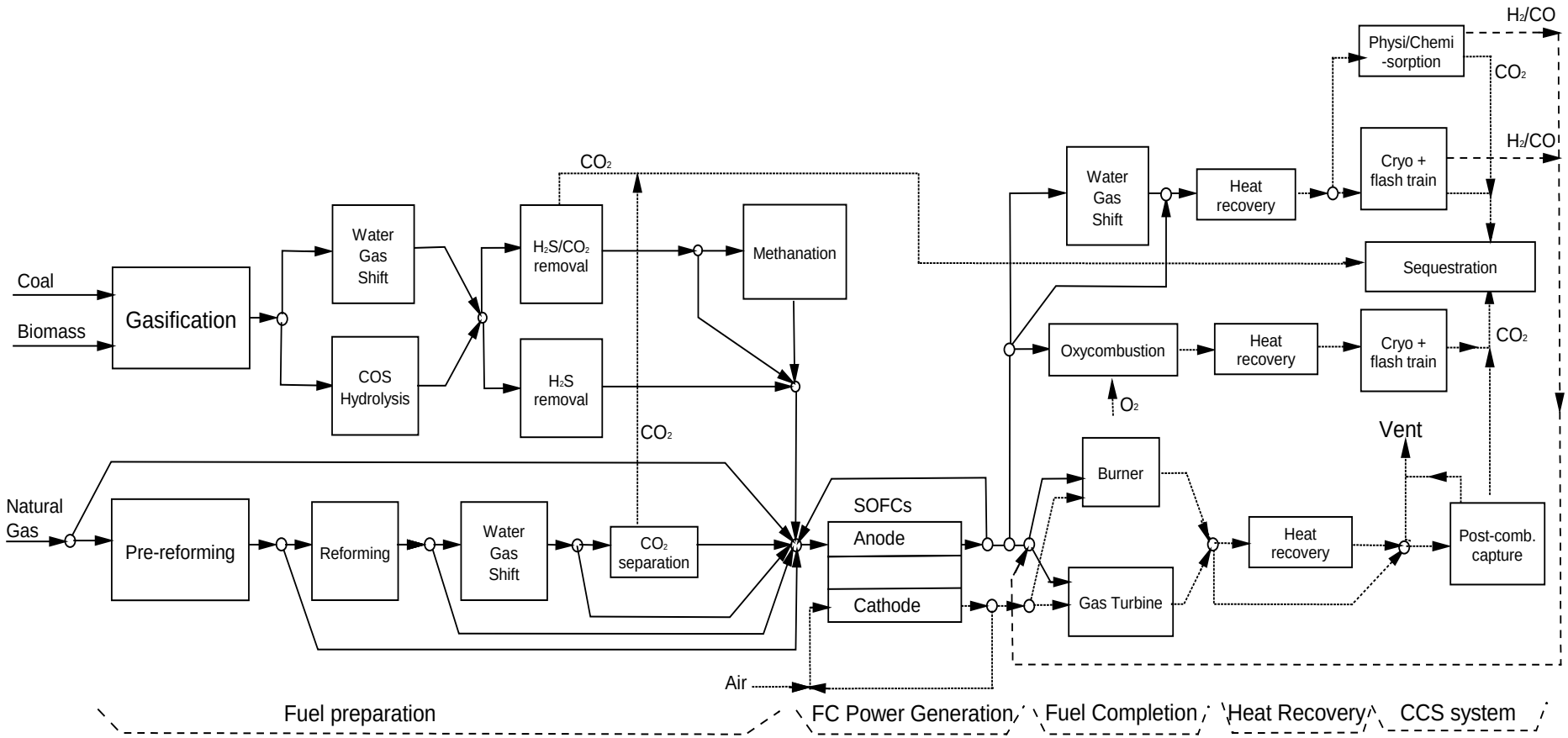

Overview of conceptual strategies and alternatives for integrating a solid oxide fuel cell in a fossil-fuel power cycle with CO_2 capture (http://dx.doi.org/10.1016/j.jpowsour.2016.05.104)

Example of IGFC with SOFC

IGCC (Oxy-fuel combustion) LHV efficiency: 40.06%; %CO_2 capt: 95.67%

Energy Balance

Th. Input: 950 MW

SOFC: 63.6%

GT: 5.36%

ST: 31%

η_{LHV} : 47.14%

Parameters:

ΔV_{SOFC}:0.747 V

Uf: 89.2%; Ua: 16.1%

TIT: 660 °C; G_{air}: 1026 kg/s

β_{COMPR}: 22.1

% CO_2 capt.: 97.5%

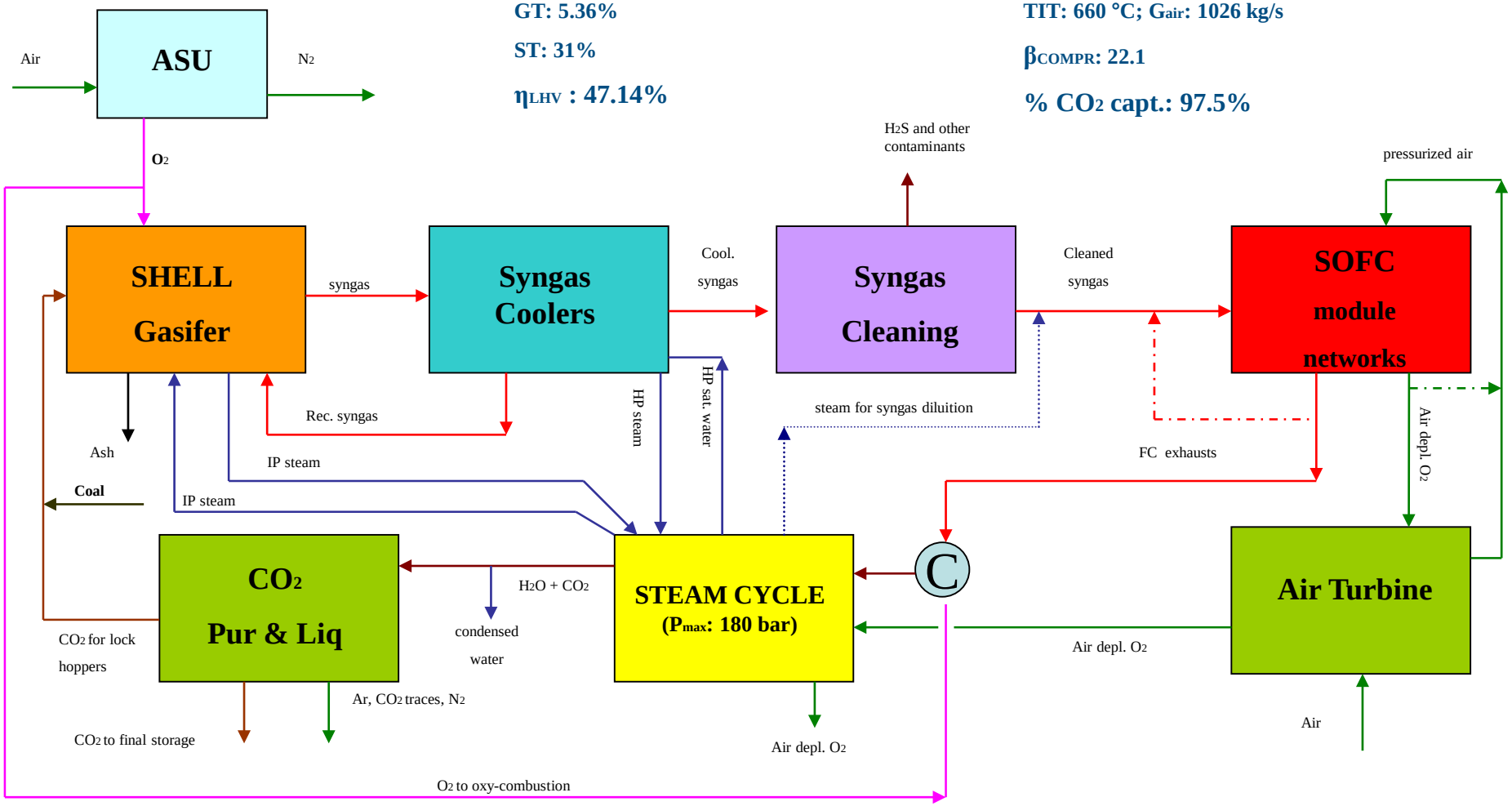

More details…

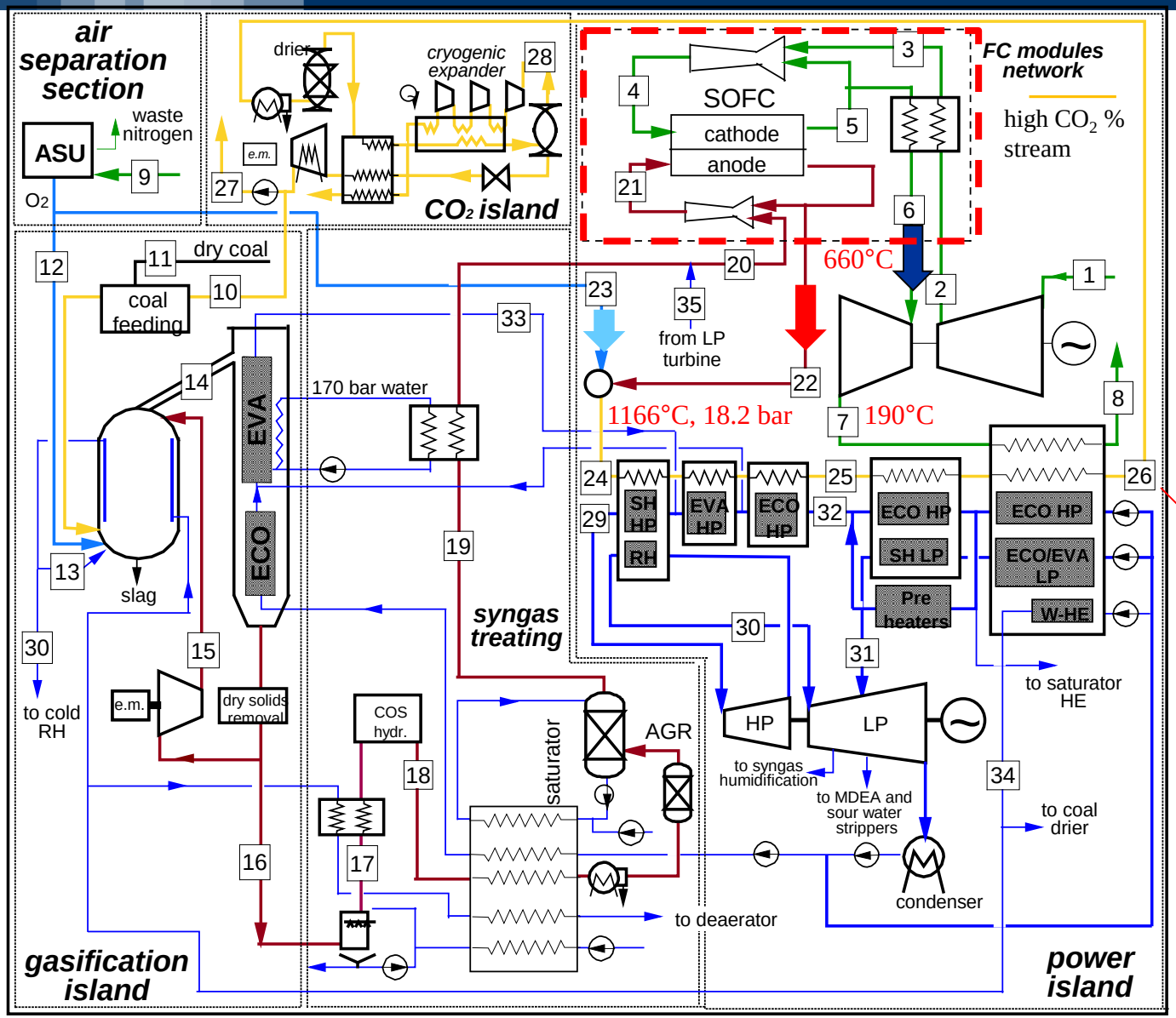

Fuel cell anode exhaust (with residual H_2, CO) is burned in pure O_2 and cooled in a special HRSG working with a high temperature, pressurized flue gas

- The air gas turbine operates with a very low TIT and is essentially a FC turbocharger
- Most of power output comes from the steam turbine

Some references on «hybrid» cycles with CO_2 capture

- V. Spallina, M.C. Romano, S. Campanari, G. Lozza "*A SOFC-based integrated gasification fuel cell cycle with CO2 capture*", ASME Turbo Expo, GT2010-22814, Glasgow, UK, June 2010. ASME J. of Engineering for Gas Turbines and Power, July 2011, Vol.133, Issue 7, doi:10.1115/1.4002176.
- S. Campanari, M. Gazzani, M.C. Romano "Analysis of direct carbon fuel cell (DCFC) based coal fired power cycles with CO2 capture", ASME GT2012-69778, J. of Engineering for Gas Turbines and Power, Volume 135, Issue 1, 2013, DOI: 10.1115/1.4007354.
- S. Campanari, G. Manzolini, P. Chiesa, "*Using MCFC for high efficiency CO2 capture from natural gas combined cycles: comparison of internal and external reforming*", Applied Energy,Vol.112,p.772-783. DOI:10.1016/j.apenergy.2013.01.045, 2013.
- Campanari, S., Mastropasqua, L., Gazzani, M., Chiesa, P., Romano, M.C. "*Predicting the ultimate potential of natural gas SOFC power cycles with CO_2 capture - Part A: Methodology and reference cases*", J. of Power Sources, vol. 325, pp. 598-614, 2016, http://dx.doi.org/10.1016/j.jpowsour.2016.05.104.
- Campanari, S., Mastropasqua, L., Gazzani, M., Chiesa, P., Romano, M.C. "*Predicting the ultimate potential of natural gas SOFC power cycles with CO2 capture -Part B Applications*" J. of Power Sources, vol. 325, pp. 194-208, 2016, http://dx.doi.org/10.1016/j.jpowsour.2016.05.134 .
- M. Spinelli, S. Campanari, M. C. Romano, S. Consonni, T. G. Kreutz, H. Ghezel-Ayagh, S. Jolly, M. Di Nitto "*Molten Carbonate Fuel Cells as means for post-combustion CO2 capture: retrofitting coal-fired steam plants and natural gas-fired combined cycles*", Proc. of ASME 2015 Int.Conf.on Fuel Cell Science, Eng. and Tech. (ASME 2015 Power and Energy Conversion Conference), PowerEnergy 2015-49454, ISBN 978-0-7918-5661-1; doi:10.1115/FUELCELL2015-49454 ; USA, June 2015