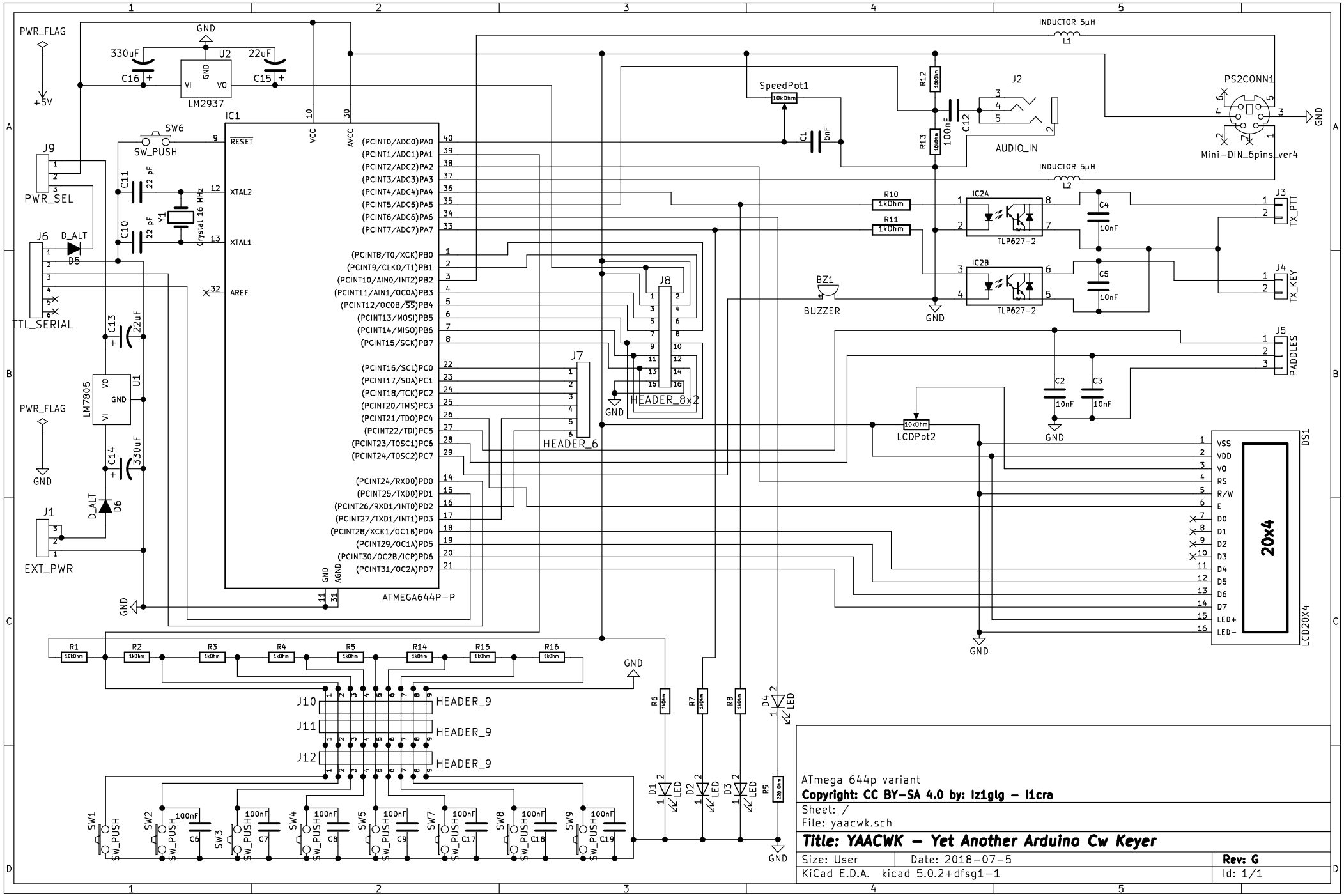

ATmega 644p variant

Copyright: CC BY-SA 4.0 by: lz1glg – l1cra

Sheet: /

File: yaacwk.sch

Title: YAACWK – Yet Another Arduino Cw Keyer

Size: User	Date: 2018-07-5	**Rev: G**
KiCad E.D.A. kicad 5.0.2+dfsg1-1		Id: 1/1