Presented By
Krzysztof Bruski,
Federico Gabreilli,
Lokin G H Reddy,
Krish Arun Kumar
Aero 3V
CAD-2 | AnMé323

IPSA
ÉCOLE D'INGÉNIEURS
DE L'AIR, DE L'ESPACE ET DE LA MOBILITÉ DURABLE

Presented To
Prof. Julien Duboc

Gyro tourbillon

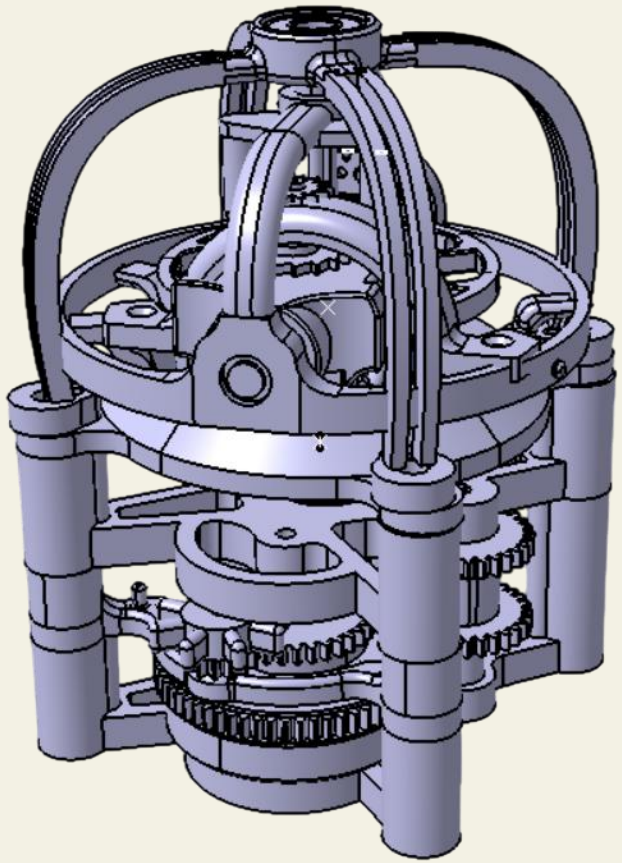

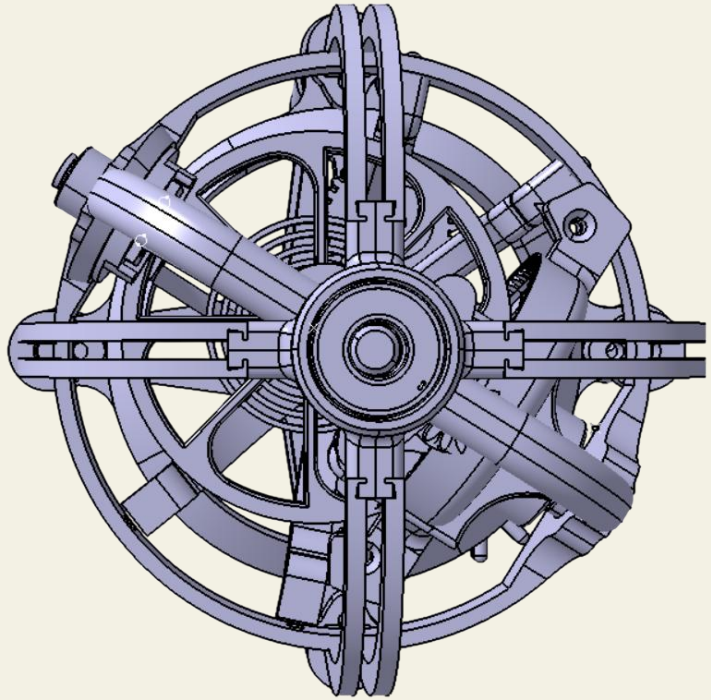

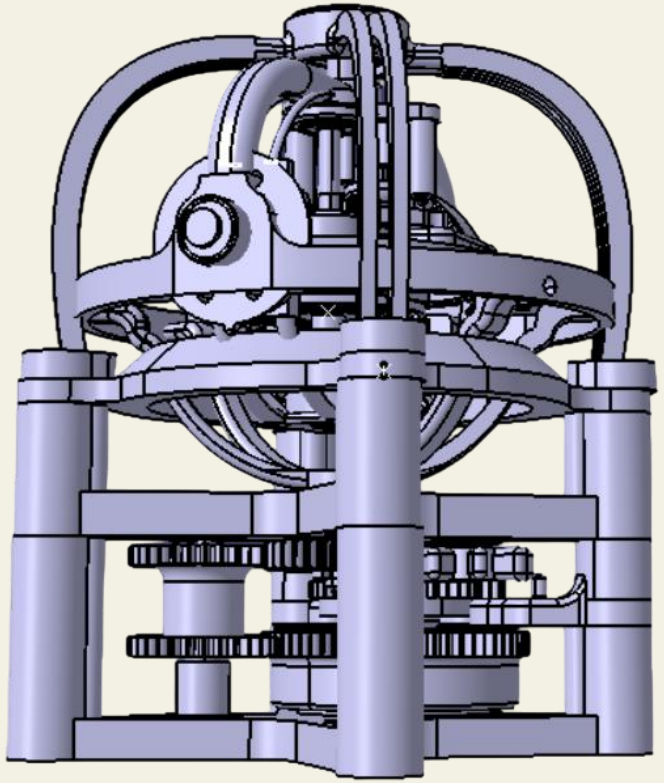

CONTENTS

1. Introduction
2. Abstract
3. Parts organisation
4. Measurements & Errors
5. Working with CATIA
6. Final assembly of the model
7. Fea analysis of the part
8. References
9. Conclusion
10. Future enhancements
11. Team management

1. Introduction

- A **gyro tourbillon** is an advanced form of a **tourbillon** that rotates in **multiple axes**, rather than the traditional single-axis rotation. It enhances the accuracy of the watch by compensating for positional errors due to gravity in **three dimensions**.

- The gyro tourbillon mechanism we have designed in CATIA is intended for use by high-end watchmakers to create exceptionally exclusive, rare, and prestigious timepieces—true masterpieces crafted for discerning watch enthusiasts and collectors.

WHY GYRO TOURBILLON ?

- It is a masterpiece of designing and intricate details which helps us in a unique perspective of utilising design tools to the fullest.
- Each tooth of a gear must be carefully designed to ensure perfection in the accuracy of the multi-axis watch.
- The gravity effect on the main gears which move the dial is nullified by the presence of gyro gears.

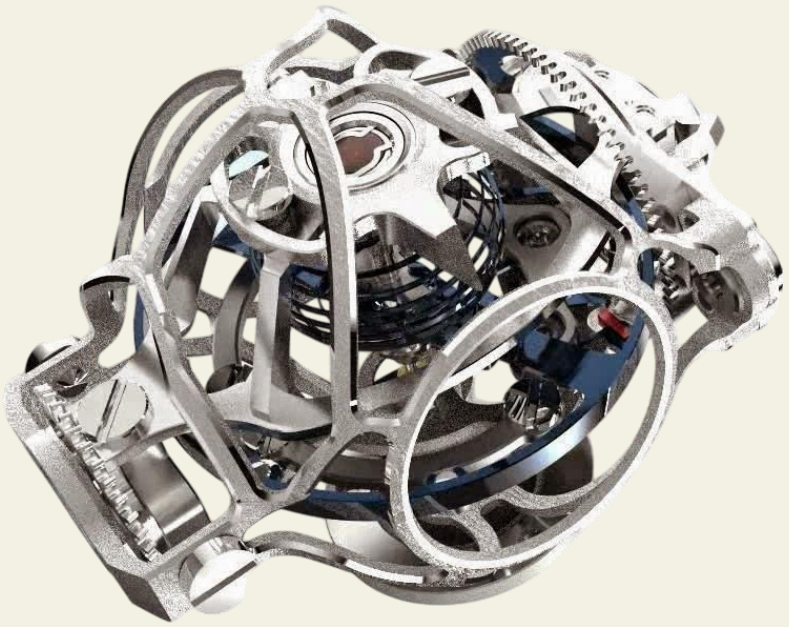

2. Abstract

- To have accurate measuring tools in order to find the dimensions of the watch to design with fine accuracy.
- To be able to sub-group parts for each member
- To design each part with intricate details
- To verify the dimensions & collaboratively bringing together all parts
- To assemble in sequential order
- To access the loads & static joints
- To perform FEA analysis & draw respective graphs

3. Parts organisation

- The reference model was downloaded from an online source.
- We began to understand the working and we had divided the parts into 4 sub-groups for better organization.
- From week 3, we began with measuring on AutoCAD.
- Although the parts were less than 60, they were sophisticated to work on with.
- We took more than a month to build our parts, and some corrections had to be made along the later quarter of the project period (i.e. during assemblies).

Links diagram

CAD-2
GYRO TOURBILLON

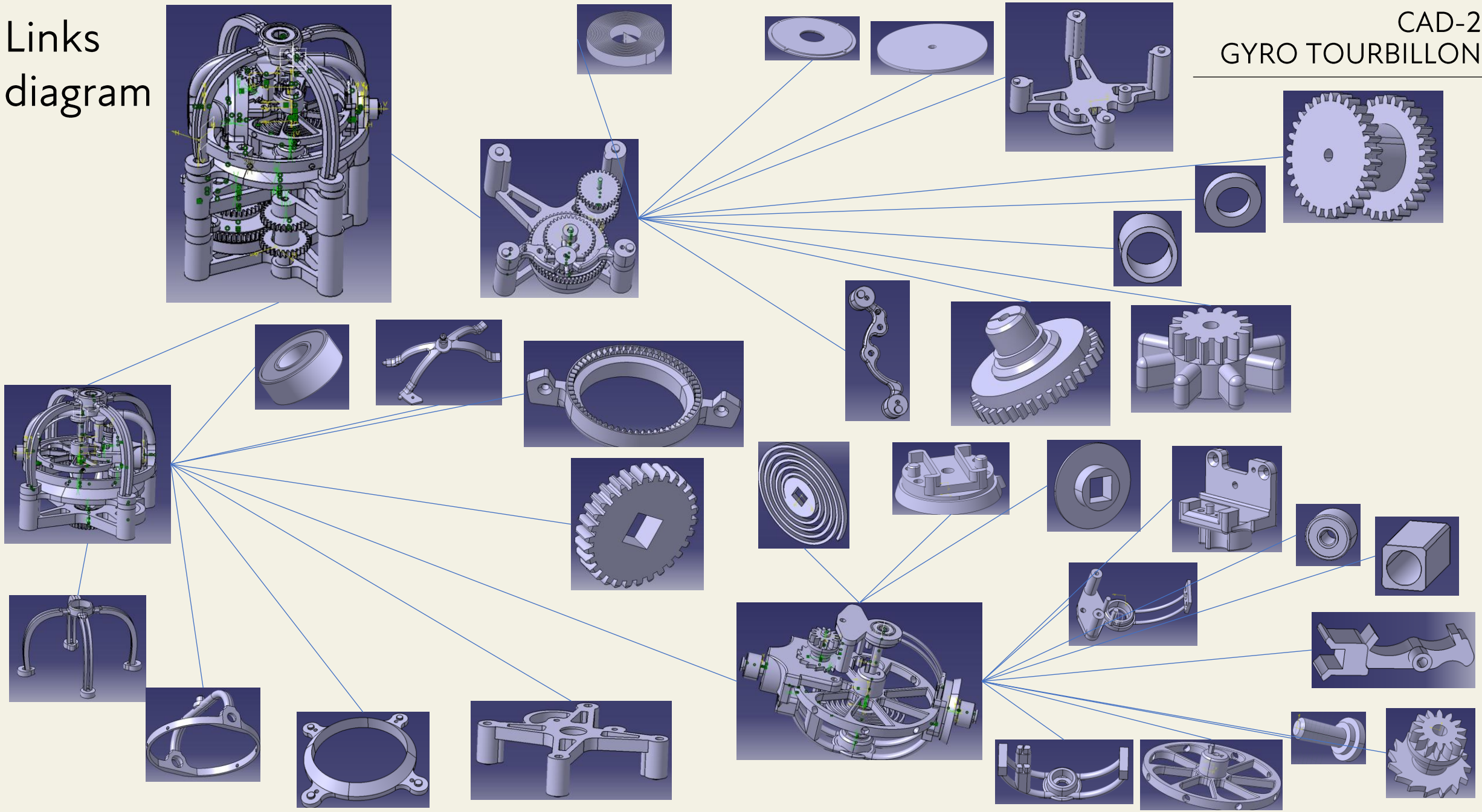

Links diagram

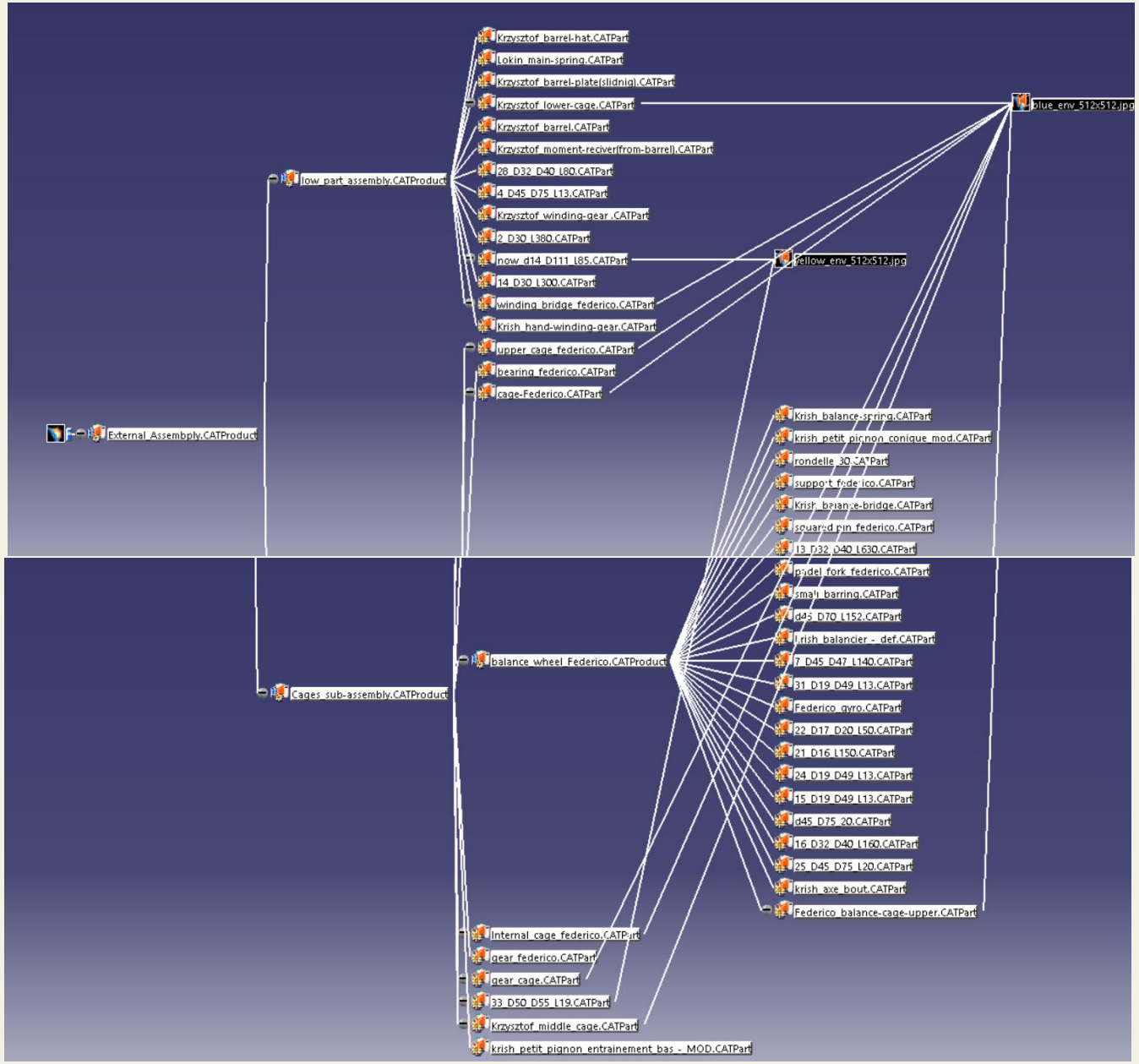

Initial file

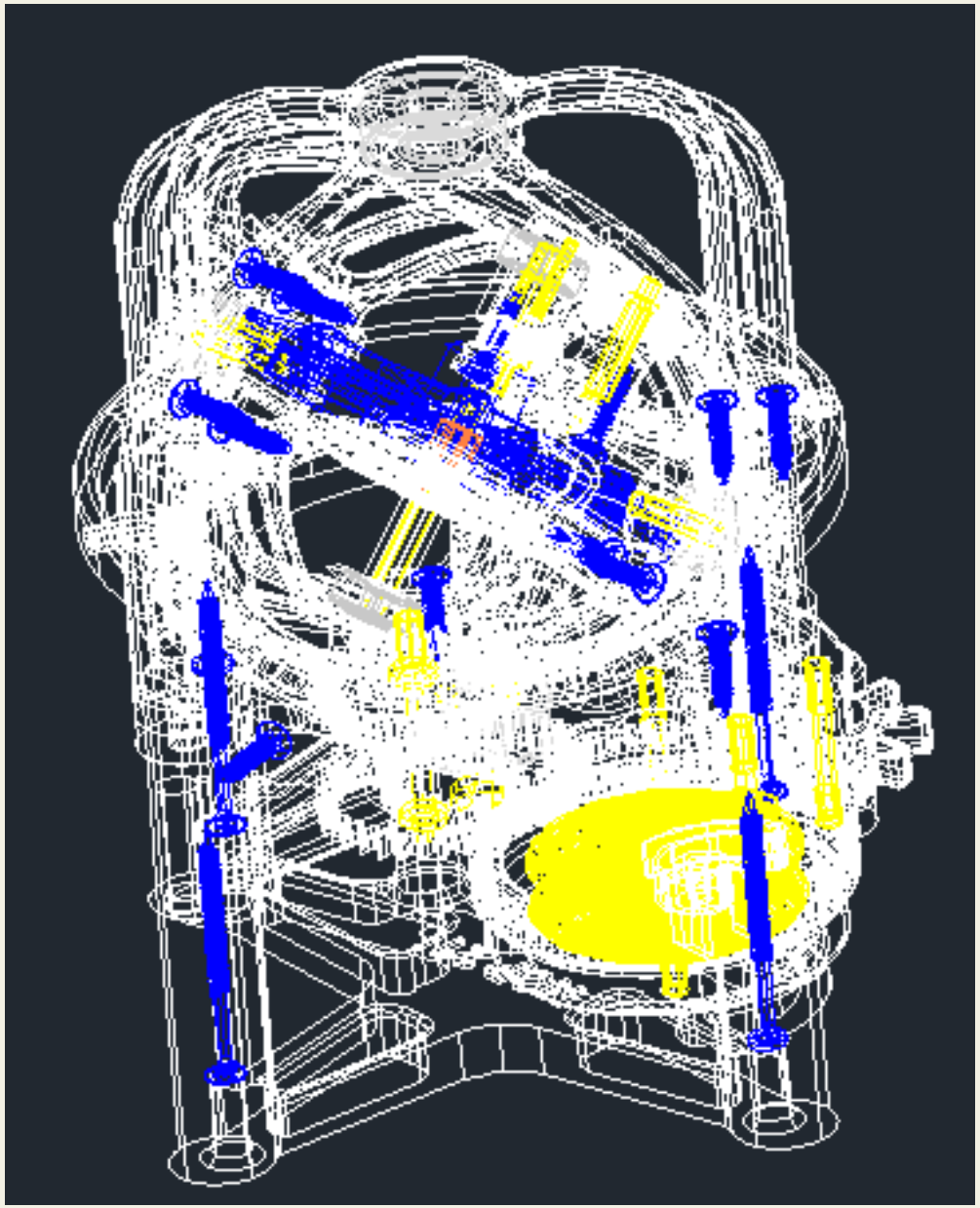

4. Measurements & Accuracy

- After getting our sub groups, we were at the most critical point: to measure each part.
- With multiple trials, we were able to comprehend the models in CATIA to the best of our understanding
- Here we encountered multiple hurdles due to errors in measuring.

5. Working with CATIA

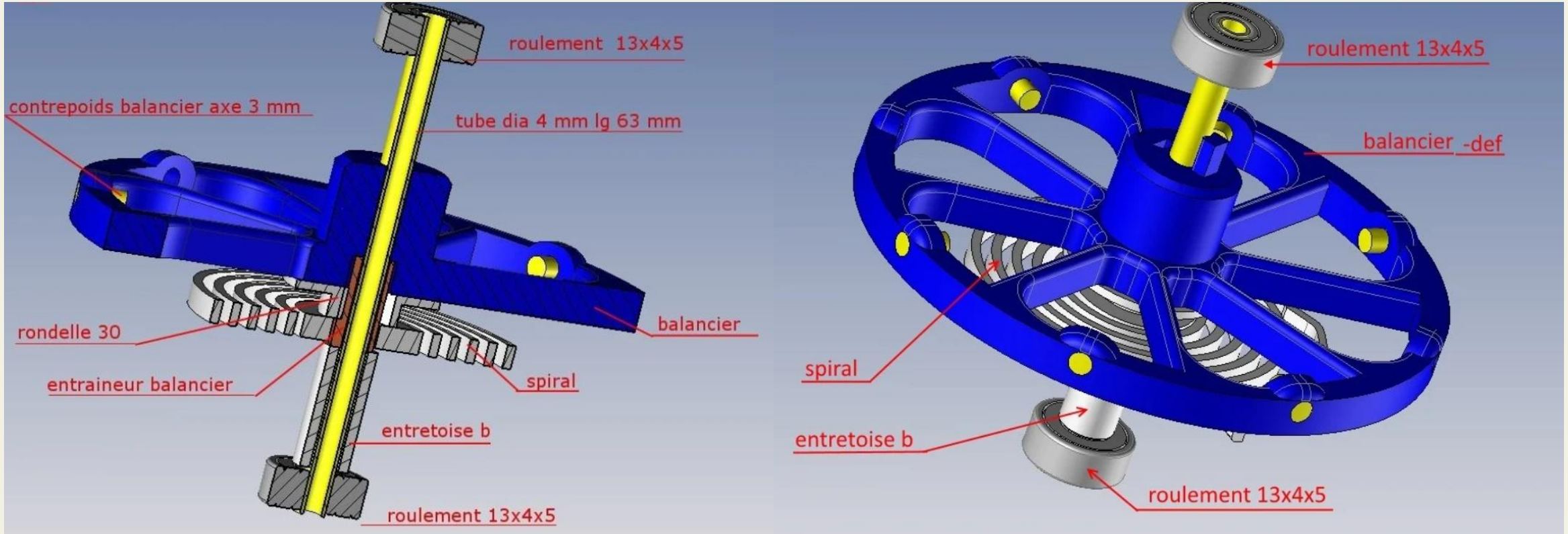

5.1 Central Spring Assembly

7. Working with CATIA

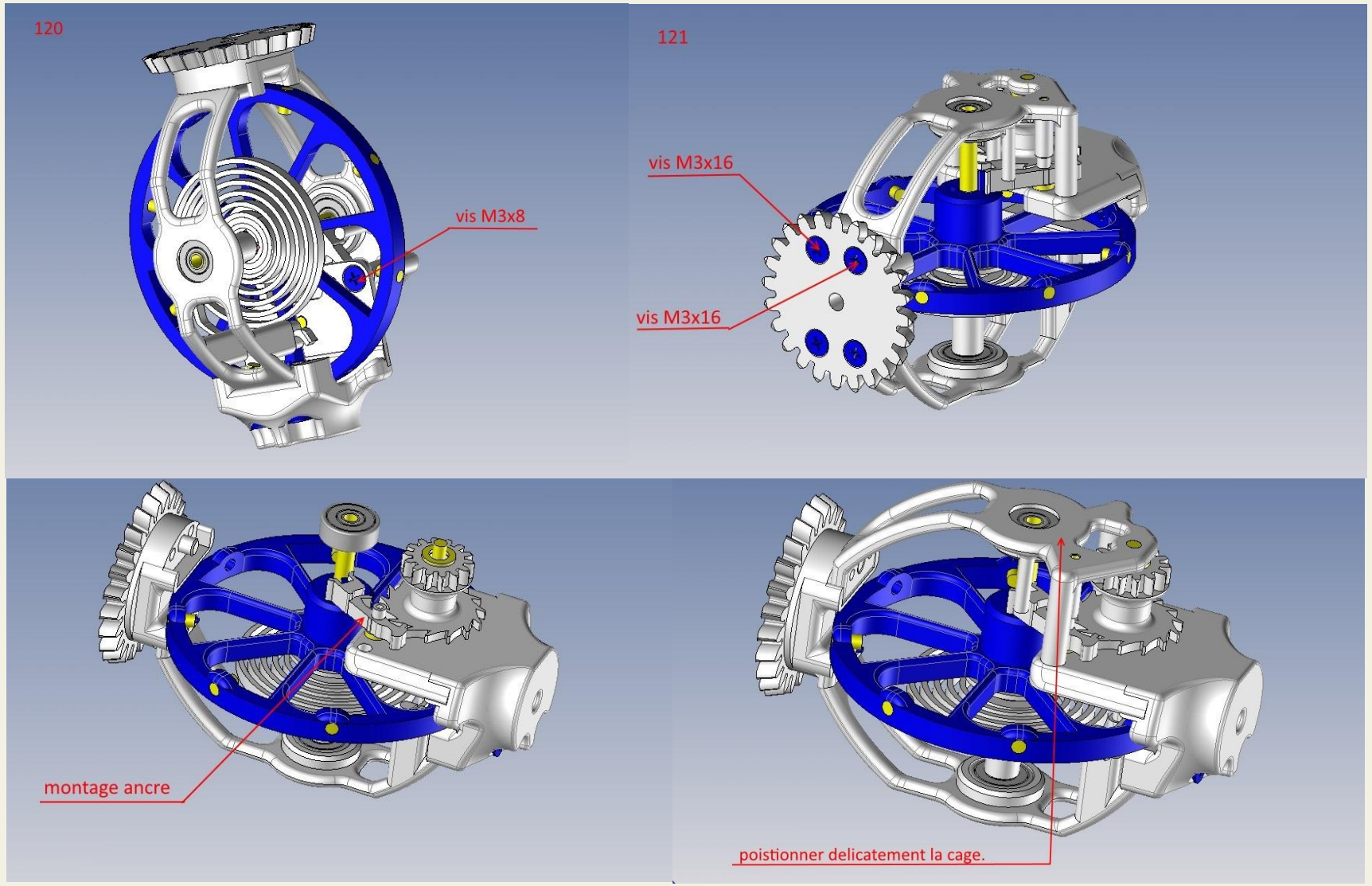

5.2 Central Assembly

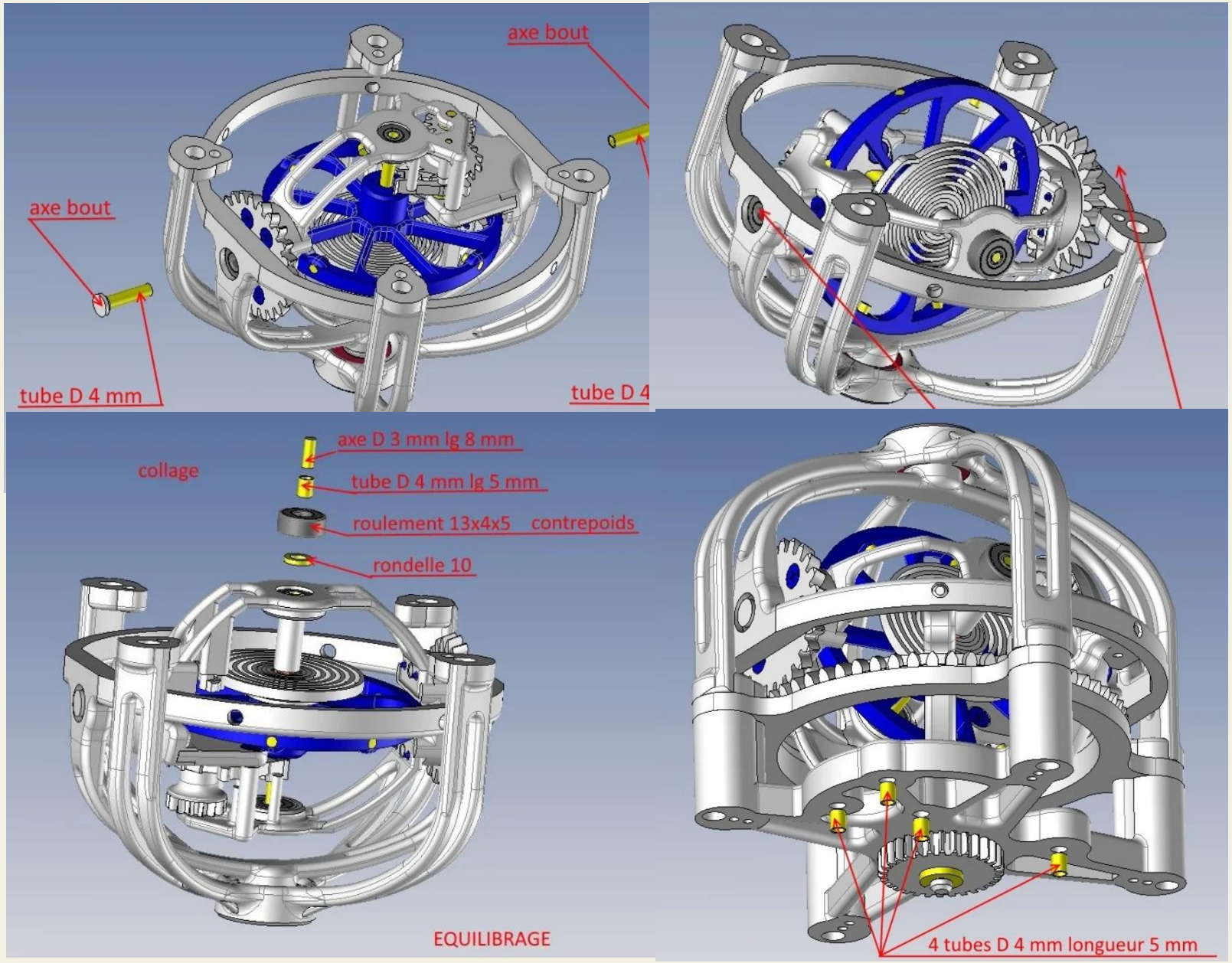

7. Working with CATIA

5.3 Upper Assembly

7. Working with CATIA

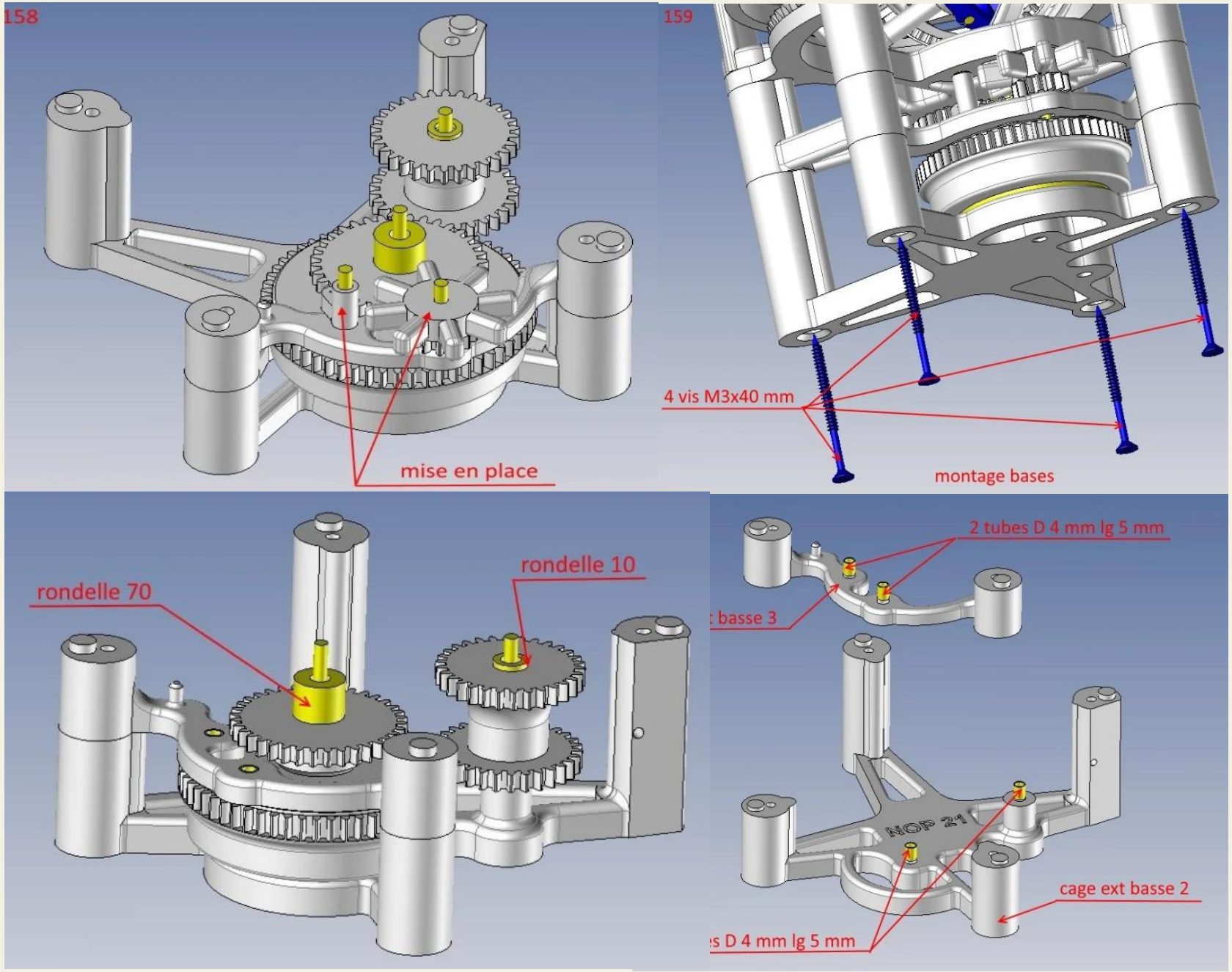

5.4 Lower Assembly

6. Final Assembly

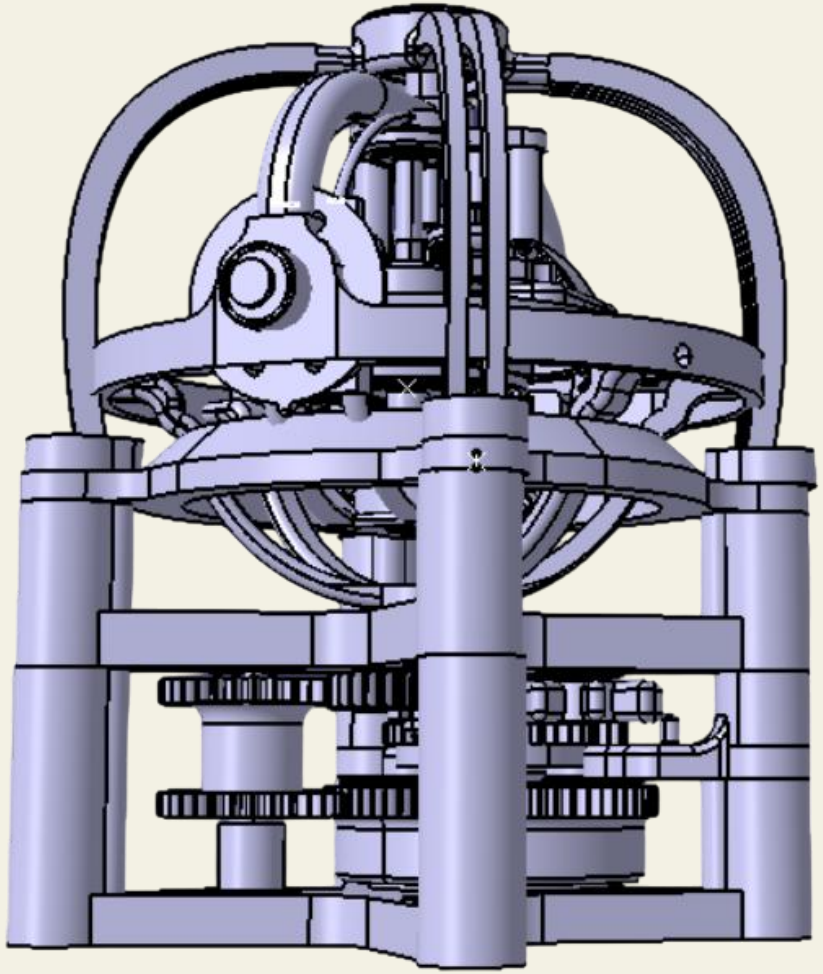

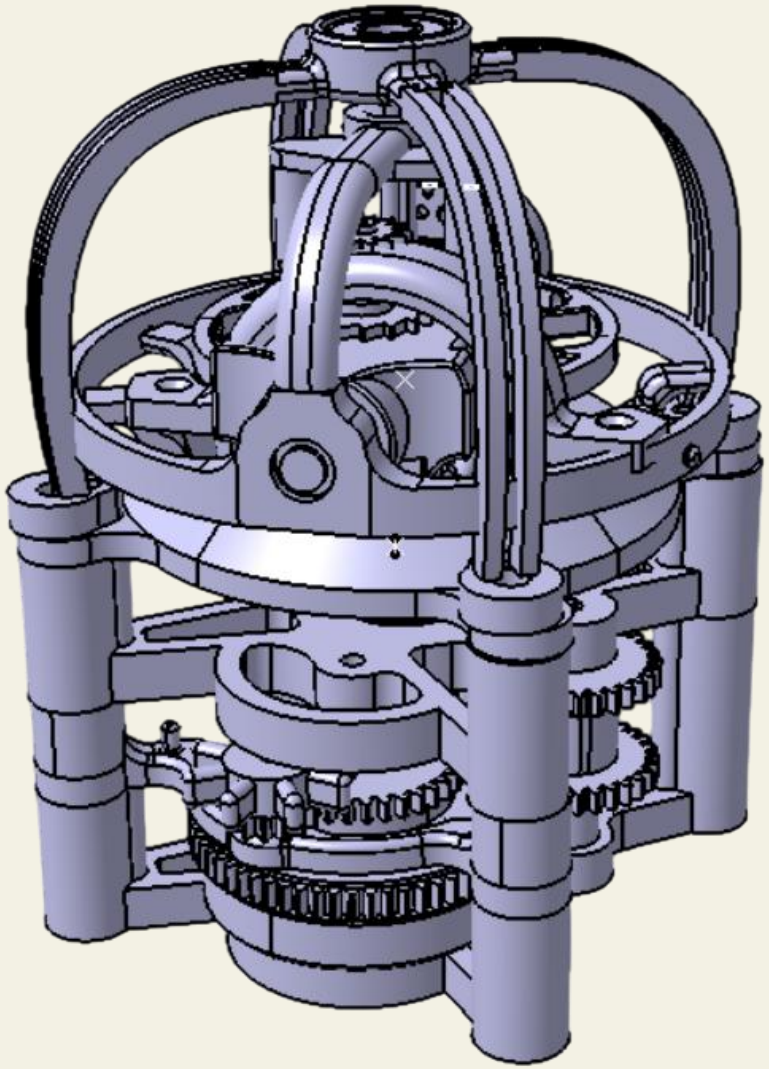

7. FEA Analysis

- For the Finite Element Analysis, the part was selected based on various parameters.
- Since gyro tourbillon is a zero gravity mechanical piece, loads are very low.
- The part we have selected is a Latch because it's the part of the mechanical system where load application is maximum.

7. FEA Analysis

FEA Load Calculation

The force applied to the latch from the back wheel is determined based on the barrel and shaft dimensions, spring selection, and gear ratio.

- Barrel diameter: 29.5 mm
- Shaft diameter: 1.5 mm
- Spring: Harmonic steel, 0.3 mm thick, 5 mm wide, 40 effective coils
- Young's modulus (E): 200gpa

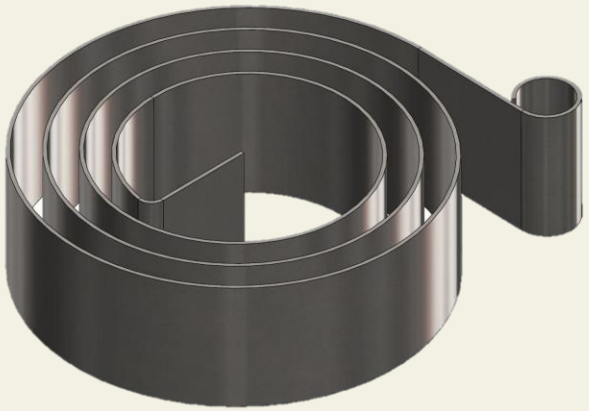

Calculations:

Spring Length Calculation:

$L=2\pi[(D+d)/4]\cdot N=2\pi[(29.5+1.5)/4]\cdot 40=1.95$ mm

Maximum Torque:

$T_{max}=[E\cdot b\cdot s^3\cdot \theta]/6L=0.036$ Nm

- $b=5$ mm(width)
- $s=0.3$ mm
- $\theta=8\pi$ (maximum angle)

Average Torque:

$T_{avg}=T_{max}/2=0.018$ Nm

Back Wheel Torque (Gear Ratio 2:1):

$T_{bw}=Tavg/2=0.009$ Nm

Force at Latch:

$F=T_{bw}/r=0.09/0.019=0.47$ N

7. FEA Analysis

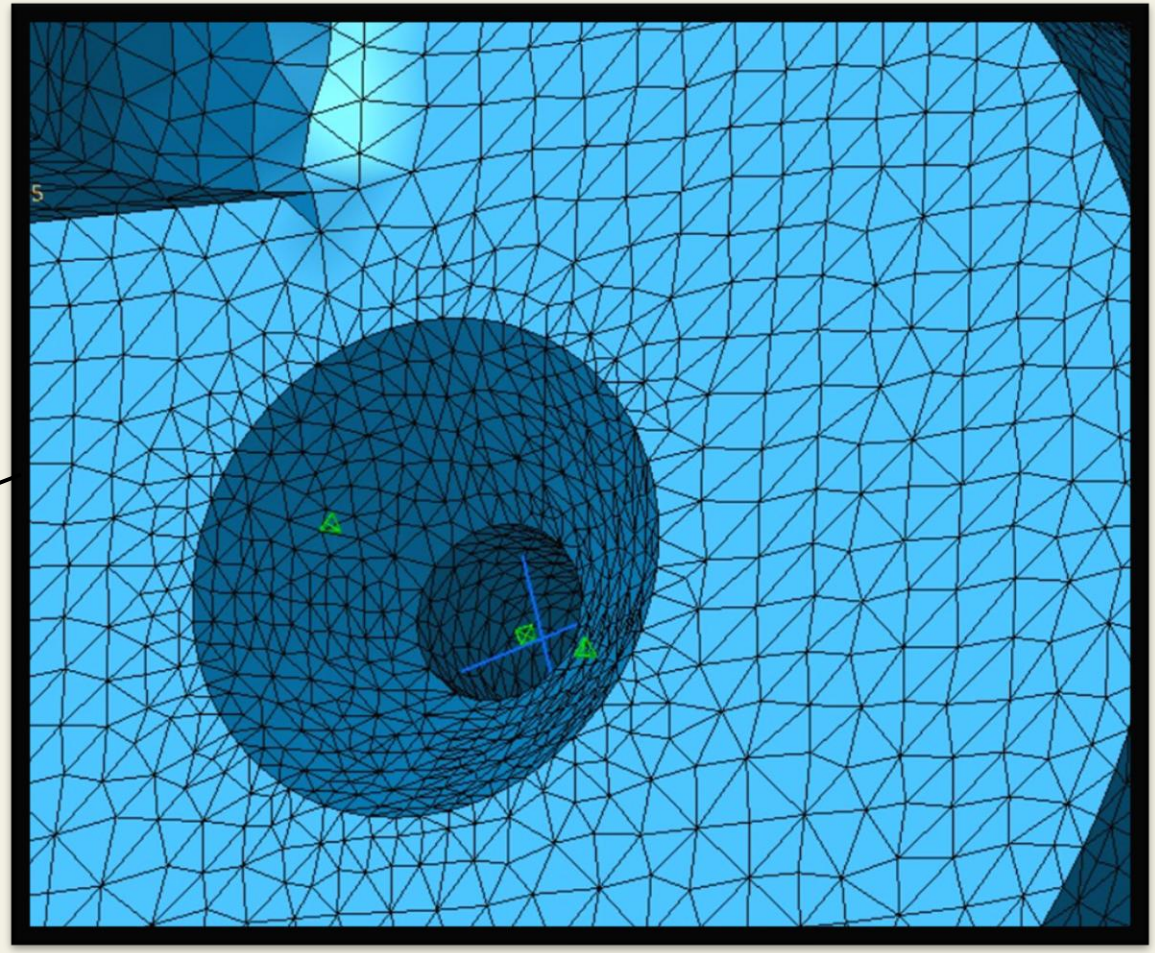

7.1 Meshing the part

7. FEA Analysis

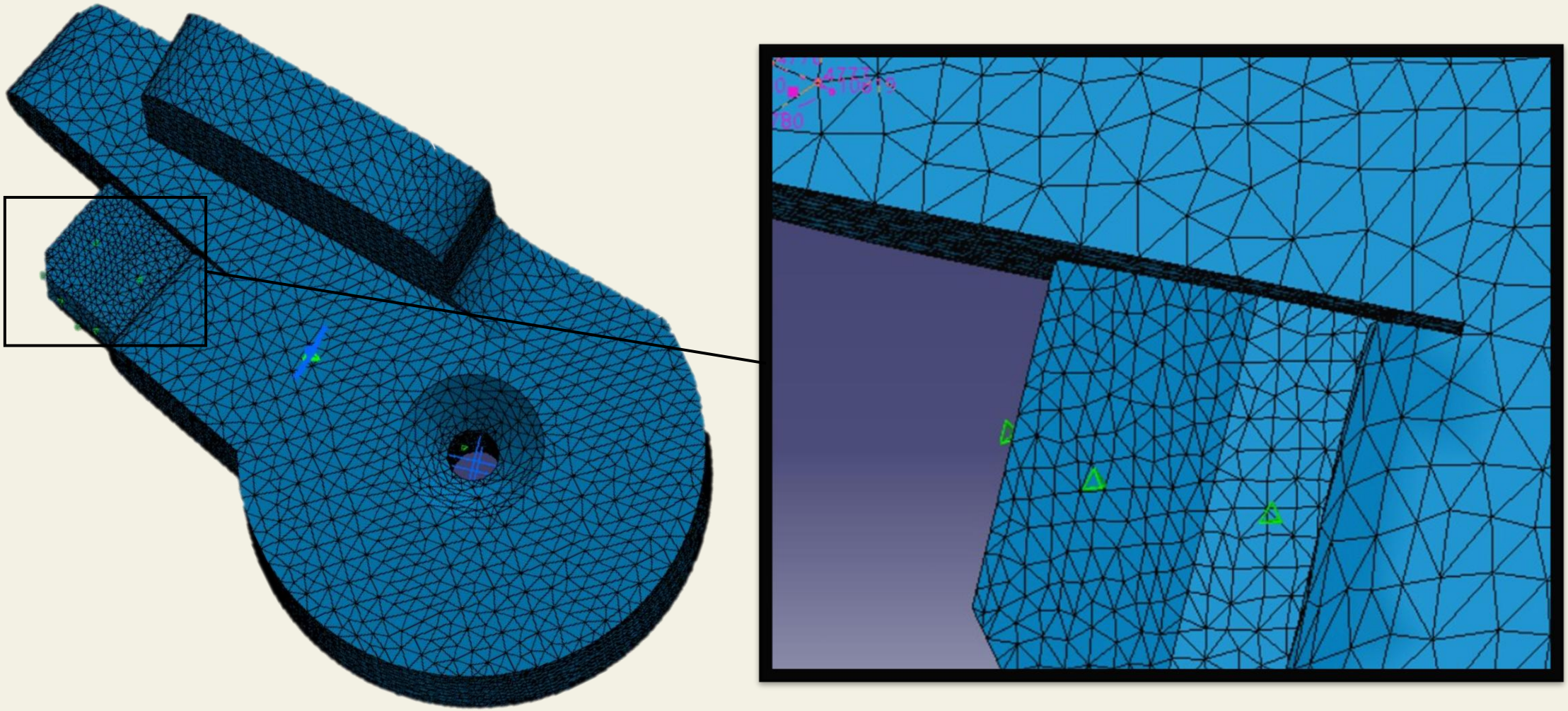

7.1 Meshing the part

7. FEA Analysis

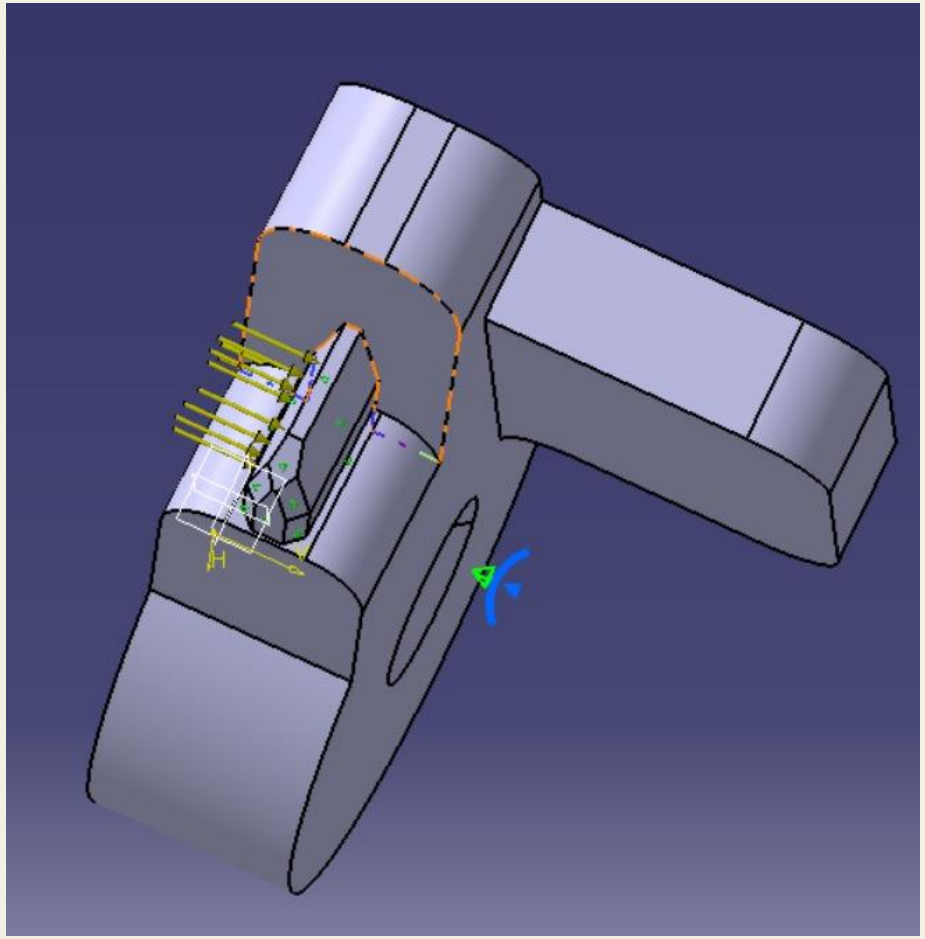

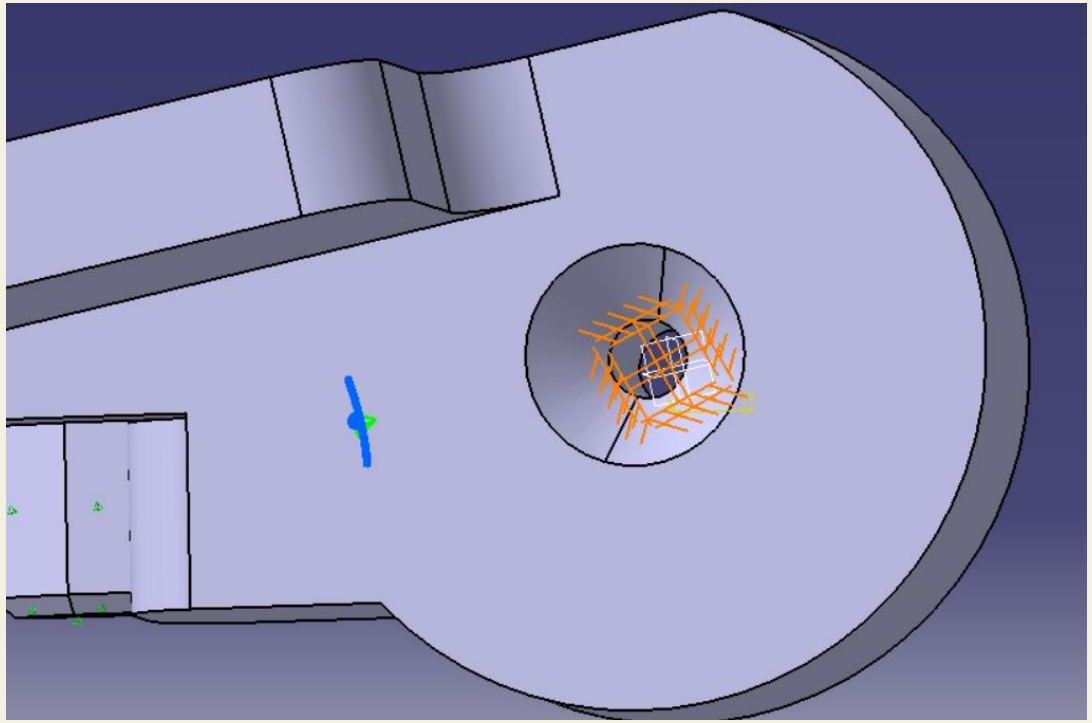

7.2 Constraints & Loads

7. FEA Analysis

7.3 Results

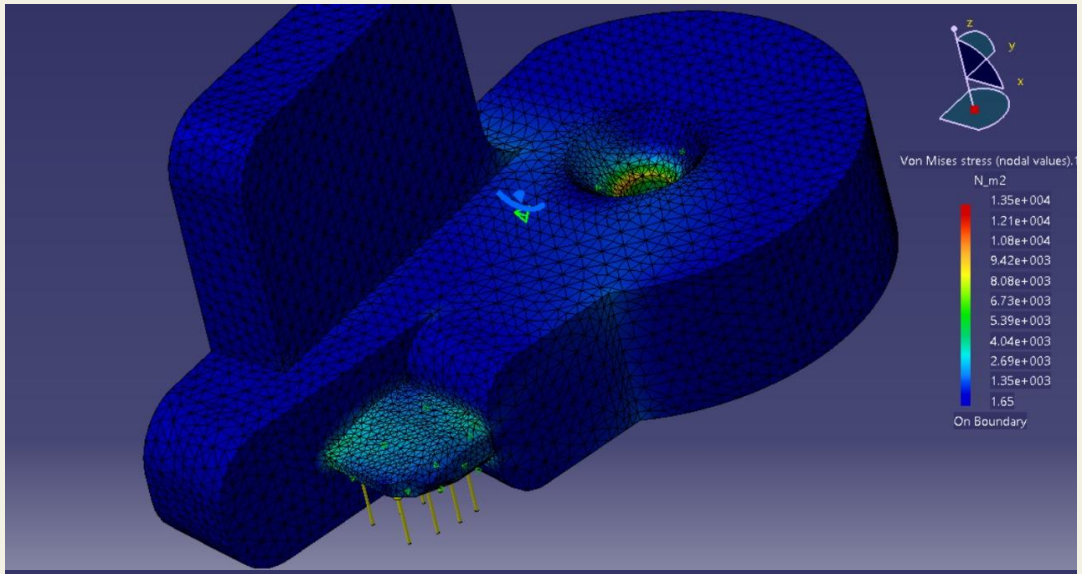

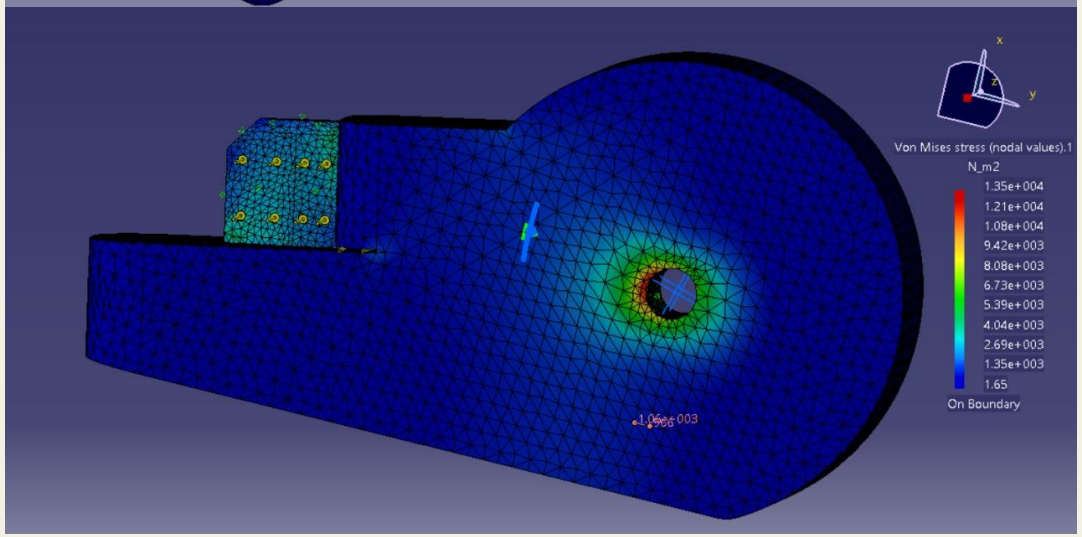

8. References

- https://www.youtube.com/watch?v=DDE_oqEuyxM
- https://youtu.be/9Co9G1pjkNU?si=YmqPDHvHqCpDkQXi

9. Conclusions

The overall objectives achieved

- To work with CATIA software to design a model
- To perform FEA analysis to understand the forces and loads applied at joints of the part
- To understand the design principle and hierarchy of design in order to avoid errors
- To be able to comprehend the shape and avoid Parallax error while measuring parts
- Understanding of team management & coordination at various stages.

10. Future Enhancements

- Due to the complexity & time constraint along with a few members using the software for the first time, we were not able to showcase a final working mechanical system
- We would like to complete the model with 100% accuracy.
- We would like to add Kinematic joints.
- We would want to do the FEA on other critical parts based on use case.
- We would want to 3D print the model with a suitable material(Resin) to present it physically.

11. Team management

- The team was able to comprehend the hurdles at the various points
- The team noted a few prospects of parameters & project selection for future enhancement.
- The flow & coherence between the progress was understood & learnt.
- Work organisation steps were clearly understood by skill levels of different team members.
- Although the project has not achieved its full ability, the team had all their time & efforts to meet the best version of the same.

THANK YOU FOR YOUR ATTENTION