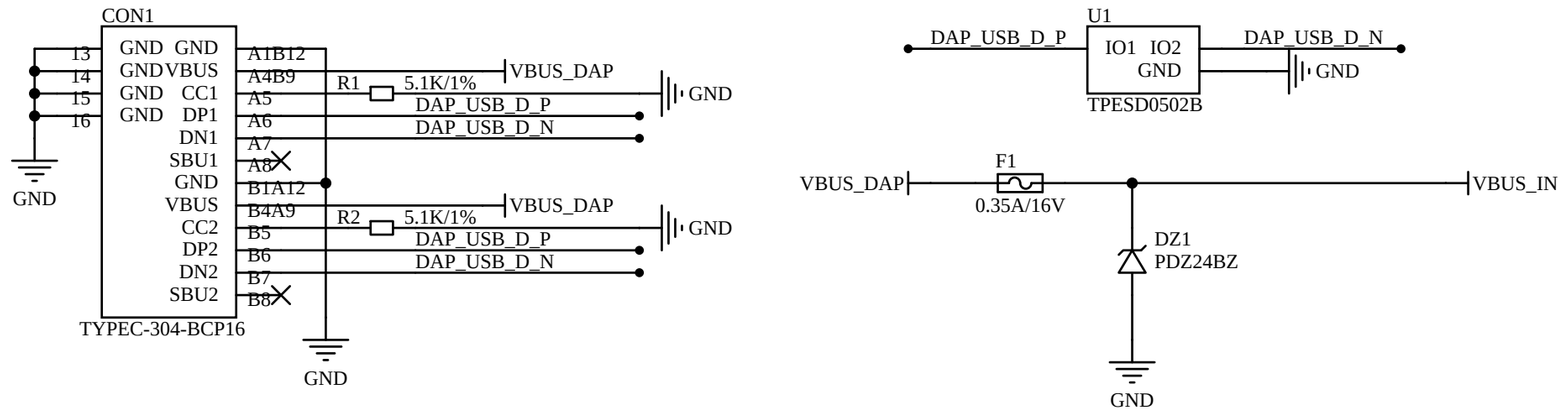

DAP_POWER

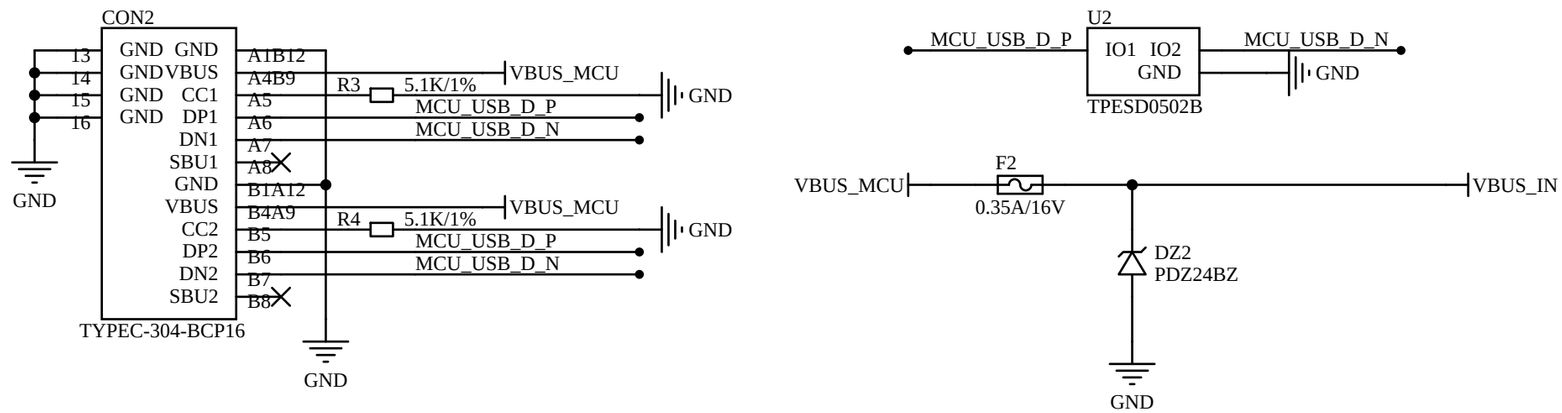

MCU_POWER

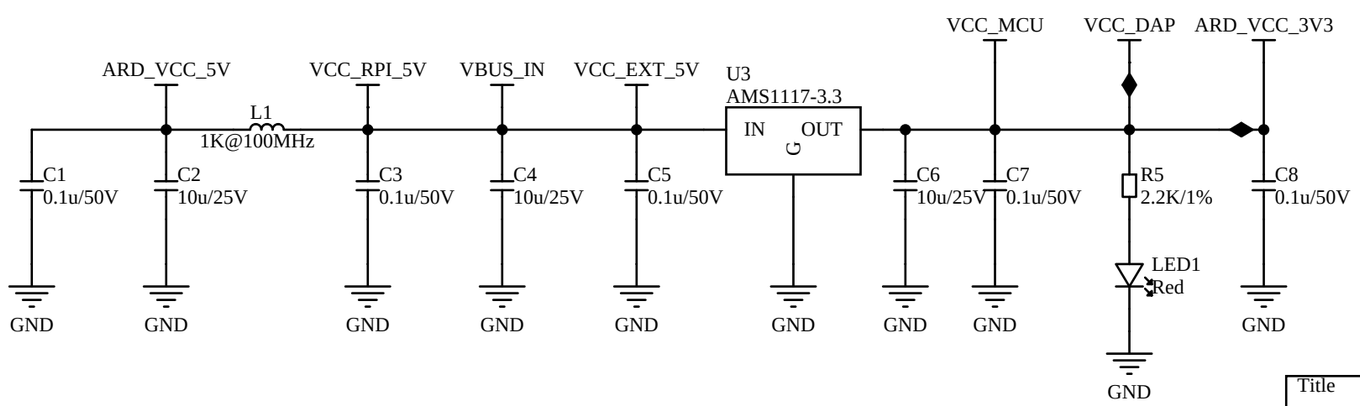

LDO to 3.3V

Title		
Size A4	Number	Revision
Date:	Sheet Of	
File:	Drawn By:	

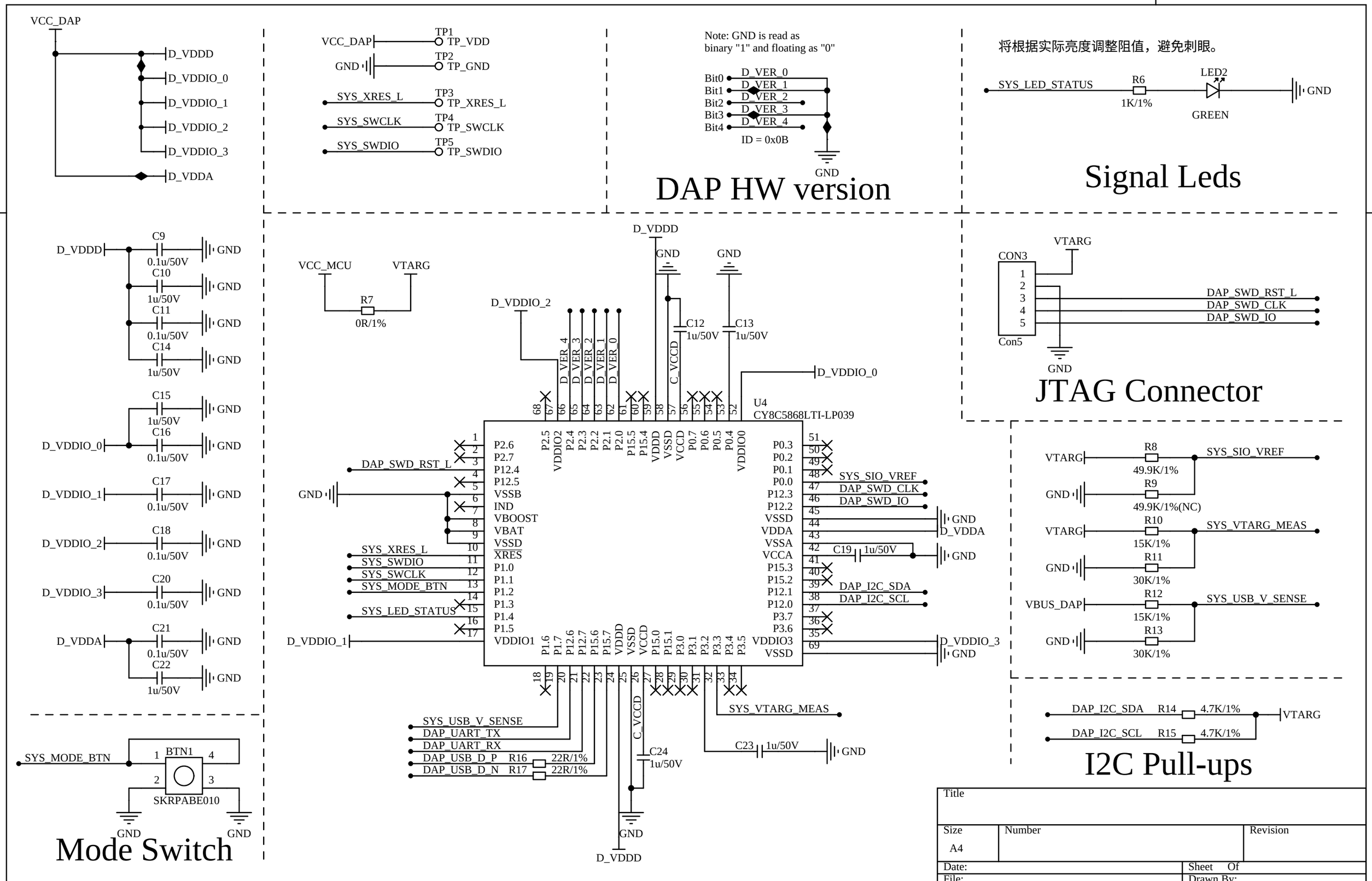
VCC_DAP
D_VDDD
D_VDDIO_0
D_VDDIO_1
D_VDDIO_2
D_VDDIO_3
D_VDDA
VCC_DAP
TP1 TP_VDD
GND
TP2 TP_GND
SYS_XRES_L
TP3 TP_XRES_L
SYS_SWCLK
TP4 TP_SWCLK
SYS_SWDIO
TP5 TP_SWDIO
Note: GND is read as binary "1" and floating as "0"
Bit0 D_VER_0
Bit1 D_VER_1
Bit2 D_VER_2
Bit3 D_VER_3
Bit4 D_VER_4
ID = 0x0B
GND
DAP HW version
将根据实际亮度调整阻值，避免刺眼。
SYS_LED_STATUS
R6
1K/1%
LED2
GREEN
GND
Signal Leds
C9 0.1u/50V
C10 1u/50V
C11 0.1u/50V
C14 1u/50V
C15 1u/50V
C16 0.1u/50V
C17 0.1u/50V
C18 0.1u/50V
C20 0.1u/50V
C21 0.1u/50V
C22 1u/50V
VCC_MCU
VTARG
R7
0R/1%
D_VDDIO_2
C12 1u/50V
C13 1u/50V
C_VCCD
D_VDDIO_0
U4
CY8C5868LTI-LP039
DAP_SWD_RST_L
SYS_XRES_L
SYS_SWDIO
SYS_SWCLK
SYS_MODE_BTN
SYS_LED_STATUS
D_VDDIO_1
SYS_SIO_VREF
DAP_SWD_CLK
DAP_SWD_IO
C19 1u/50V
DAP_I2C_SDA
DAP_I2C_SCL
D_VDDIO_3
SYS_USB_V_SENSE
DAP_UART_TX
DAP_UART_RX
DAP_USB_D_P R16 22R/1%
DAP_USB_D_N R17 22R/1%
SYS_VTARG_MEAS
C23 1u/50V
C24 1u/50V
CON3
Con5
DAP_SWD_RST_L
DAP_SWD_CLK
DAP_SWD_IO
JTAG Connector
R8 49.9K/1%
R9 49.9K/1%(NC)
R10 15K/1%
R11 30K/1%
R12 15K/1%
R13 30K/1%
SYS_SIO_VREF
SYS_VTARG_MEAS
SYS_USB_V_SENSE
DAP_I2C_SDA R14 4.7K/1%
DAP_I2C_SCL R15 4.7K/1%
I2C Pull-ups
BTN1
SKRPABE010
Mode Switch
Title
Size A4
Number
Revision
Date:
Sheet Of
File:
Drawn By:

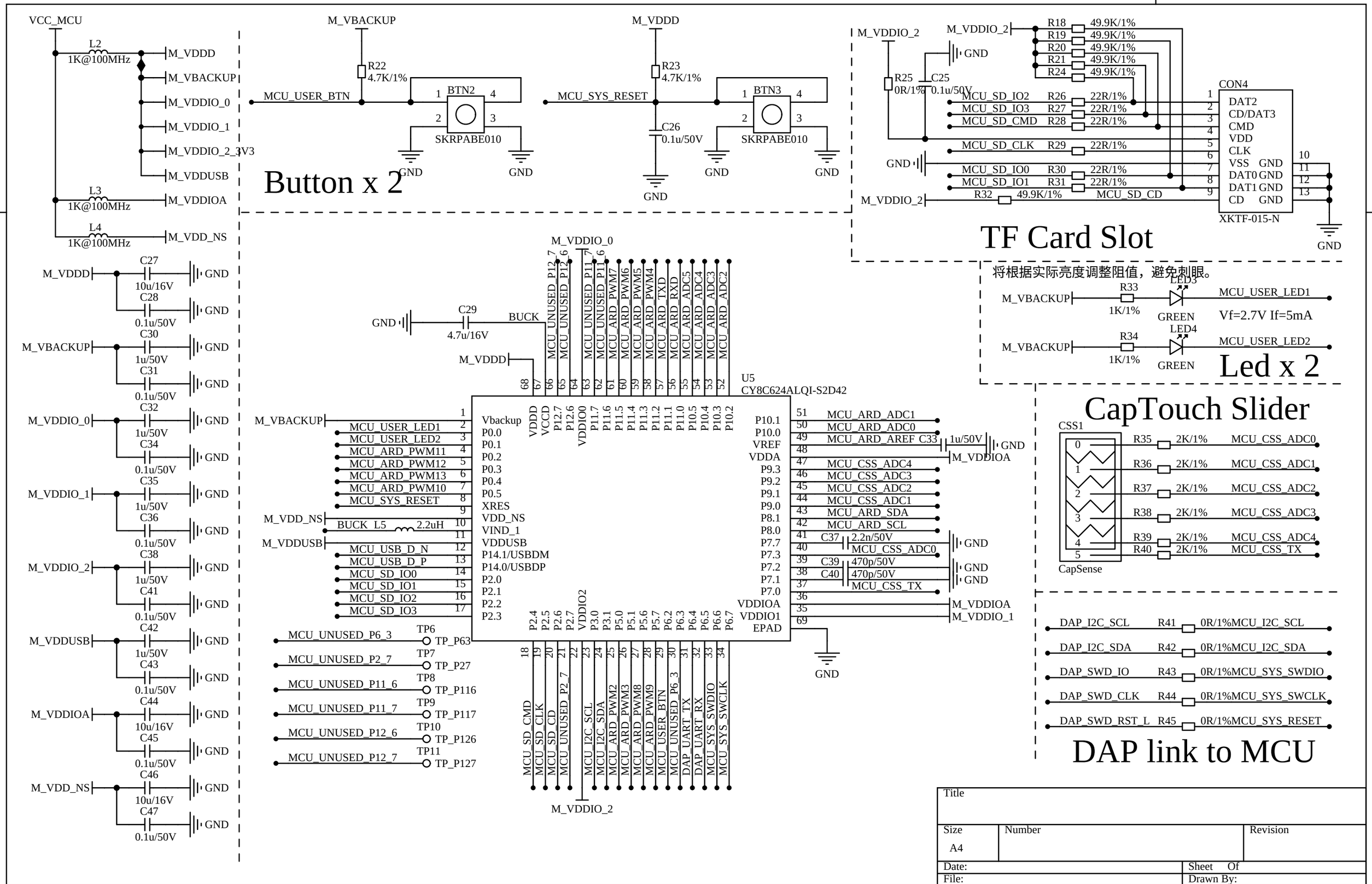
VCC_MCU
L2
1K@100MHz
M_VDDD
M_VBACKUP
M_VDDIO_0
M_VDDIO_1
M_VDDIO_2_3V3
M_VDDUSB
L3
1K@100MHz
M_VDDIOA
L4
1K@100MHz
M_VDD_NS
M_VBACKUP
R22
4.7K/1%
MCU_USER_BTN
BTN2
SKRPABE010
GND
Button x 2
M_VDDD
R23
4.7K/1%
MCU_SYS_RESET
BTN3
SKRPABE010
C26
0.1u/50V
GND
M_VDDIO_2
R25
0R/1%
C25
0.1u/50V
R18 49.9K/1%
R19 49.9K/1%
R20 49.9K/1%
R21 49.9K/1%
R24 49.9K/1%
MCU_SD_IO2 R26 22R/1%
MCU_SD_IO3 R27 22R/1%
MCU_SD_CMD R28 22R/1%
MCU_SD_CLK R29 22R/1%
MCU_SD_IO0 R30 22R/1%
MCU_SD_IO1 R31 22R/1%
R32 49.9K/1%
MCU_SD_CD
CON4
DAT2
CD/DAT3
CMD
VDD
CLK
VSS GND
DAT0 GND
DAT1 GND
CD GND
XKTF-015-N
TF Card Slot
将根据实际亮度调整阻值，避免刺眼。
R33
1K/1%
LED3
GREEN
MCU_USER_LED1
Vf=2.7V If=5mA
R34
1K/1%
LED4
GREEN
MCU_USER_LED2
Led x 2
CapTouch Slider
CSS1
CapSense
R35 2K/1% MCU_CSS_ADC0
R36 2K/1% MCU_CSS_ADC1
R37 2K/1% MCU_CSS_ADC2
R38 2K/1% MCU_CSS_ADC3
R39 2K/1% MCU_CSS_ADC4
R40 2K/1% MCU_CSS_TX
C27 10u/16V
C28 0.1u/50V
C30 1u/50V
C31 0.1u/50V
C32 1u/50V
C34 0.1u/50V
C35 1u/50V
C36 0.1u/50V
C38 1u/50V
C41 0.1u/50V
C42 1u/50V
C43 0.1u/50V
C44 10u/16V
C45 0.1u/50V
C46 10u/16V
C47 0.1u/50V
C29 4.7u/16V
BUCK
M_VDDIO_0
U5
CY8C624ALQI-S2D42
Vbackup
P0.0
P0.1
P0.2
P0.3
P0.4
P0.5
XRES
VDD_NS
VIND_1
VDDUSB
P14.1/USBDM
P14.0/USBDP
P2.0
P2.1
P2.2
P2.3
P10.1
P10.0
VREF
VDDA
P9.3
P9.2
P9.1
P9.0
P8.1
P8.0
P7.7
P7.3
P7.2
P7.1
P7.0
VDDIOA
VDDIO1
EPAD
MCU_USER_LED1
MCU_USER_LED2
MCU_ARD_PWM11
MCU_ARD_PWM12
MCU_ARD_PWM13
MCU_ARD_PWM10
MCU_SYS_RESET
BUCK_L5 2.2uH
MCU_USB_D_N
MCU_USB_D_P
MCU_SD_IO0
MCU_SD_IO1
MCU_SD_IO2
MCU_SD_IO3
MCU_ARD_ADC1
MCU_ARD_ADC0
MCU_ARD_AREF C33 1u/50V
MCU_CSS_ADC4
MCU_CSS_ADC3
MCU_CSS_ADC2
MCU_CSS_ADC1
MCU_ARD_SDA
MCU_ARD_SCL
C37 2.2n/50V
MCU_CSS_ADC0
C39 470p/50V
C40 470p/50V
MCU_CSS_TX
M_VDDIOA
M_VDDIO_1
MCU_UNUSED_P6_3 TP6 TP_P63
MCU_UNUSED_P2_7 TP7 TP_P27
MCU_UNUSED_P11_6 TP8 TP_P116
MCU_UNUSED_P11_7 TP9 TP_P117
MCU_UNUSED_P12_6 TP10 TP_P126
MCU_UNUSED_P12_7 TP11 TP_P127
MCU_SD_CMD
MCU_SD_CLK
MCU_SD_CD
MCU_UNUSED_P2_7
MCU_I2C_SCL
MCU_I2C_SDA
MCU_ARD_PWM2
MCU_ARD_PWM3
MCU_ARD_PWM8
MCU_ARD_PWM9
MCU_USER_BTN
MCU_UNUSED_P6_3
DAP_UART_TX
DAP_UART_RX
MCU_SYS_SWDIO
MCU_SYS_SWCLK
M_VDDIO_2
DAP_I2C_SCL R41 0R/1%MCU_I2C_SCL
DAP_I2C_SDA R42 0R/1%MCU_I2C_SDA
DAP_SWD_IO R43 0R/1%MCU_SYS_SWDIO
DAP_SWD_CLK R44 0R/1%MCU_SYS_SWCLK
DAP_SWD_RST_L R45 0R/1%MCU_SYS_RESET
DAP link to MCU
Title
Size
A4
Number
Revision
Date:
Sheet Of
File:
Drawn By:

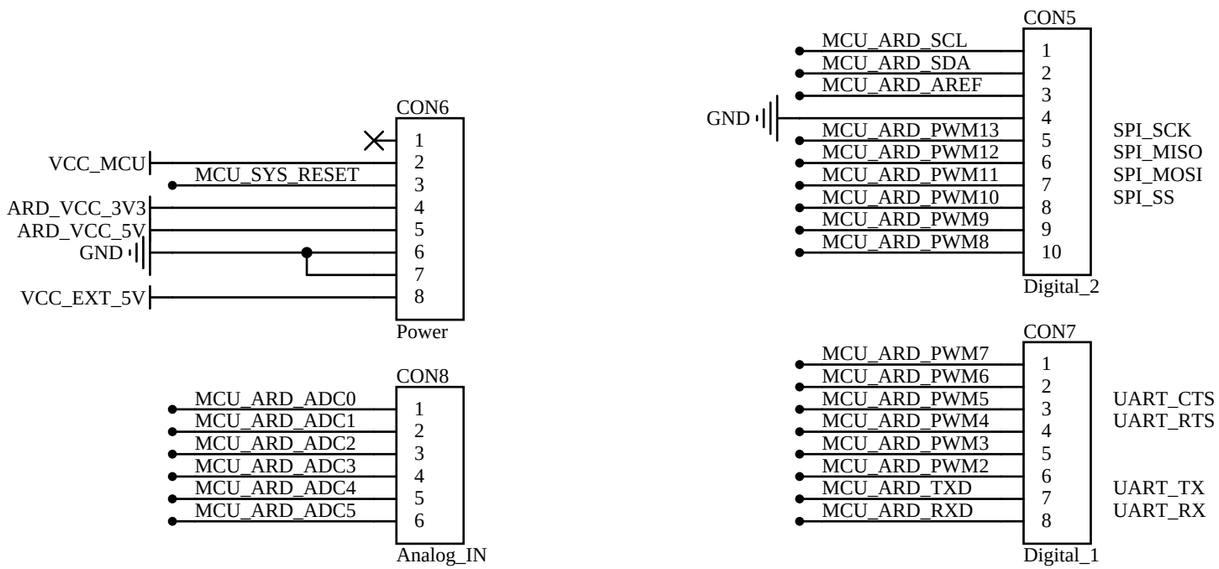

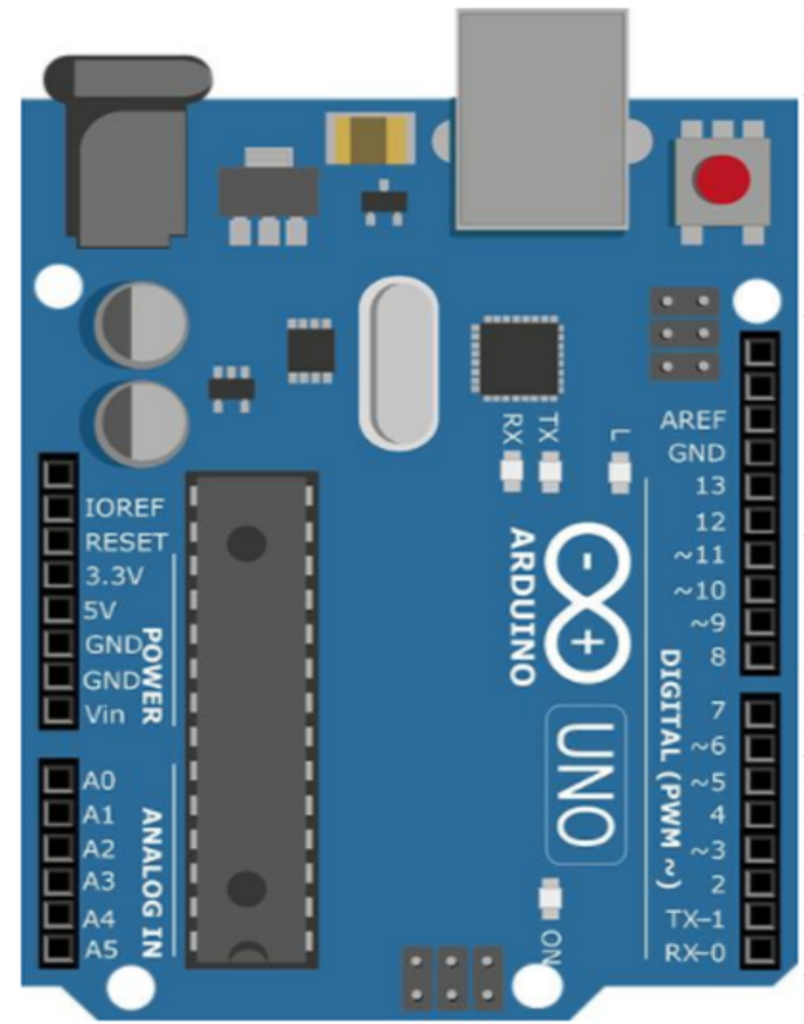

Title		
Size A4	Number	Revision
Date:	Sheet Of	
File:	Drawn By:	

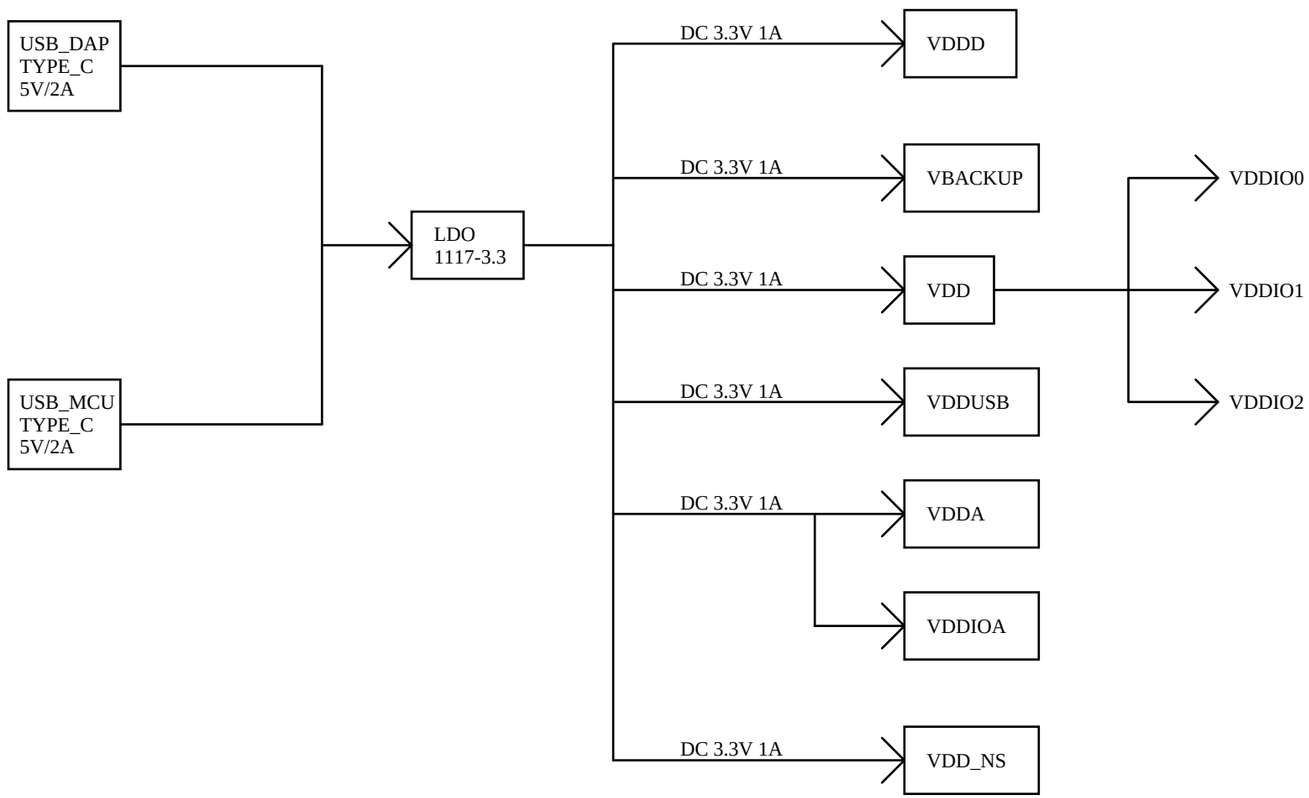

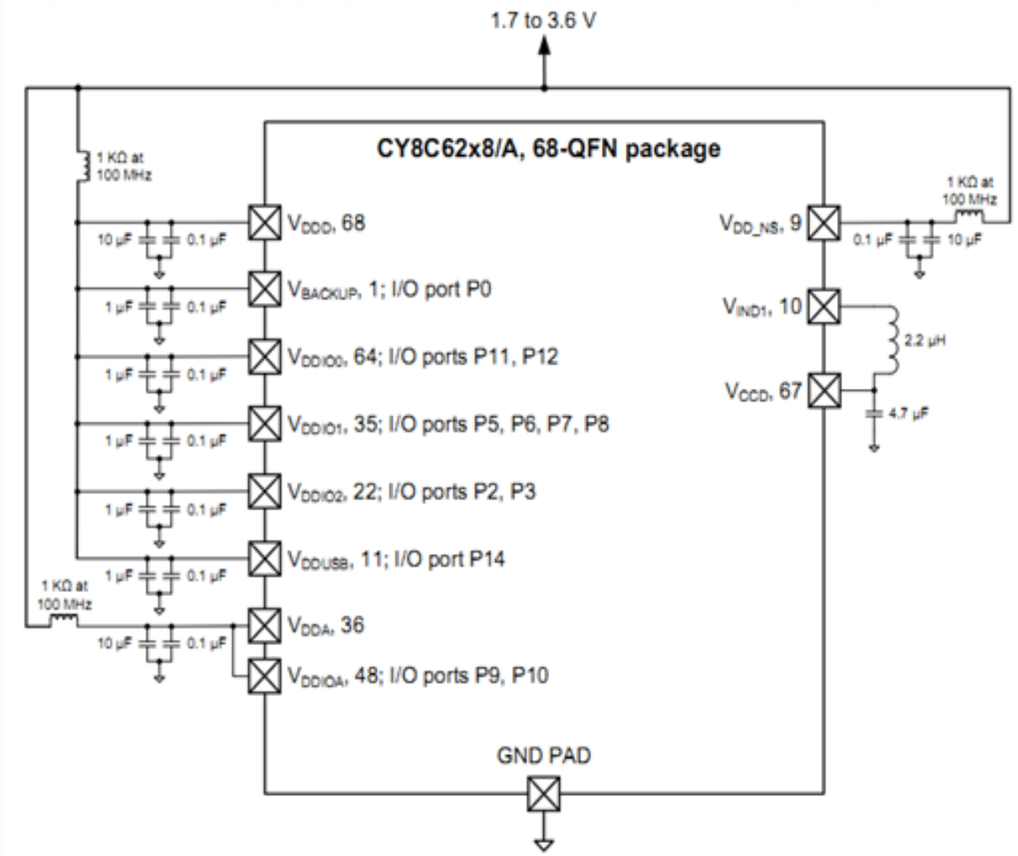

Title		
Size A4	Number	Revision
Date:	Sheet Of	
File:	Drawn By:	

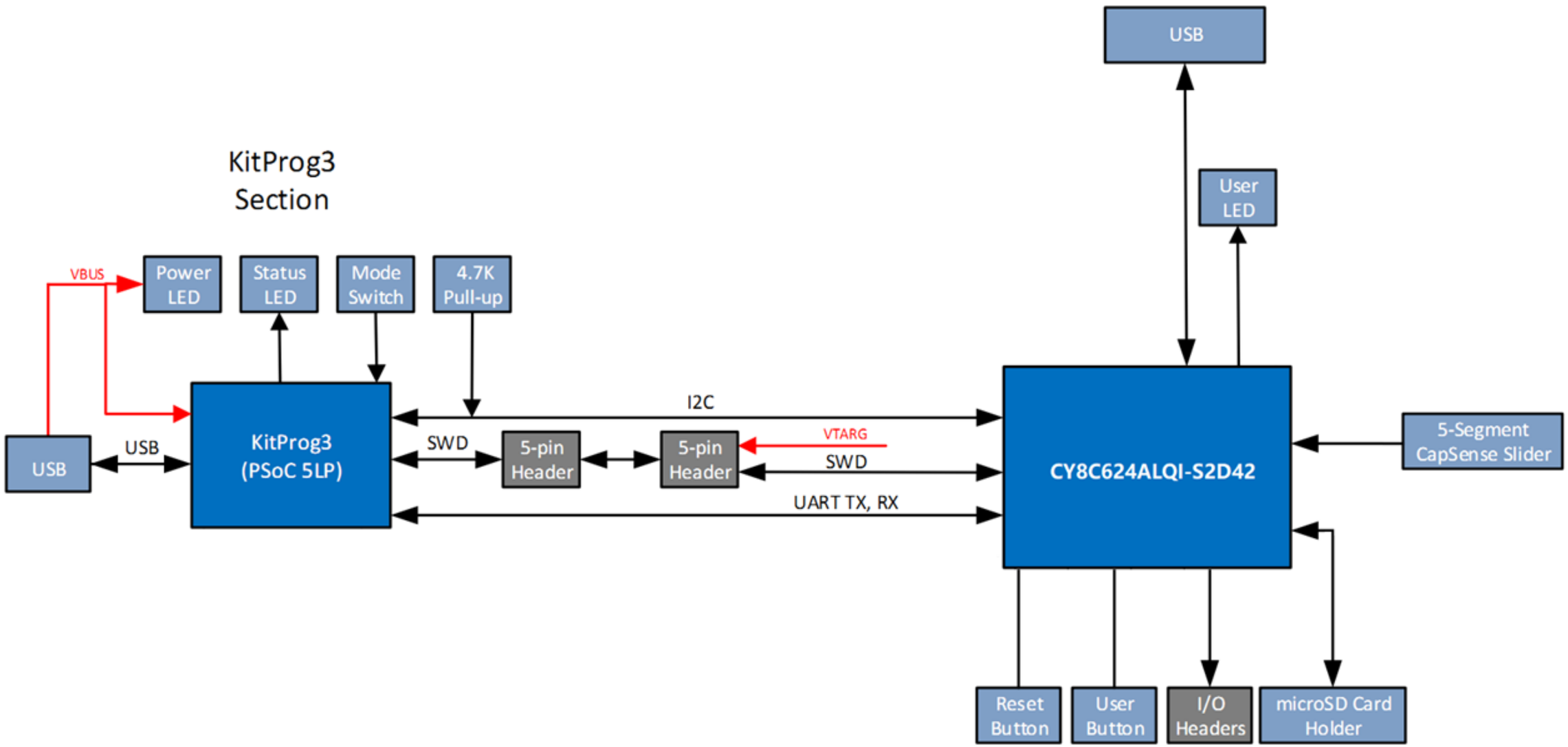

Title		
Size A4	Number	Revision
Date:	Sheet Of	
File:	Drawn By:	

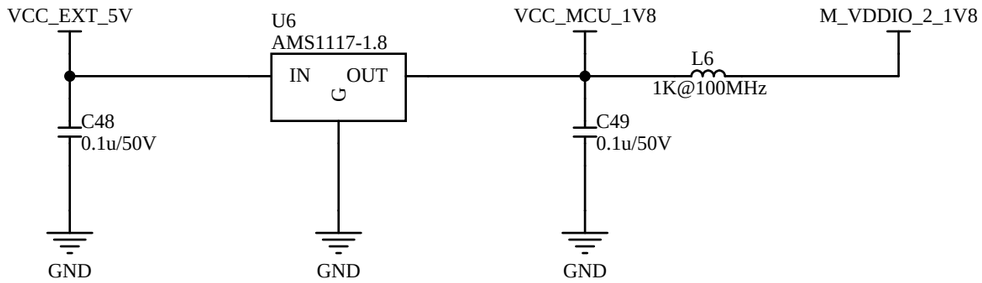

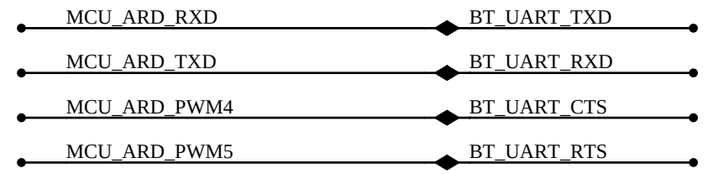

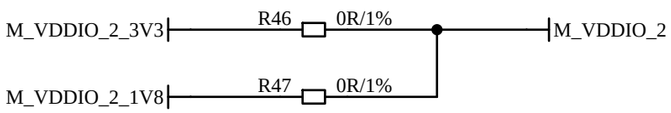

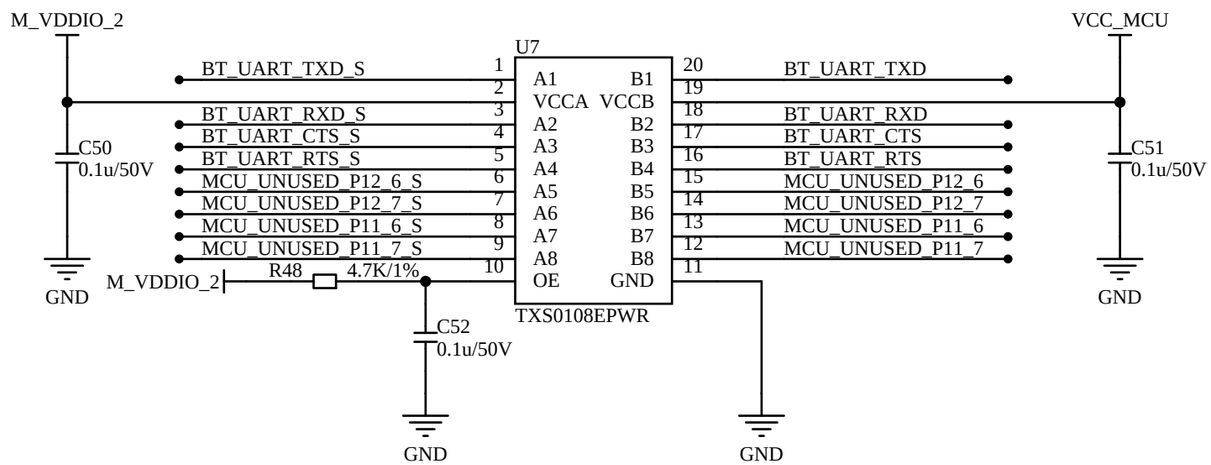

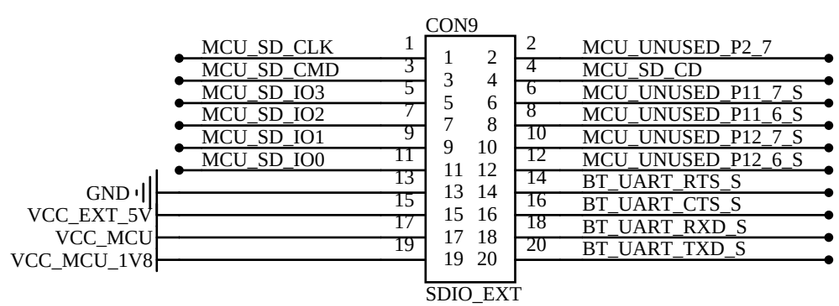

Title		
Size A4	Number	Revision
Date:	Sheet Of	
File:	Drawn By:	