REVISION RECORD			
LTR	ECO NO:	APPROVED:	DATE:

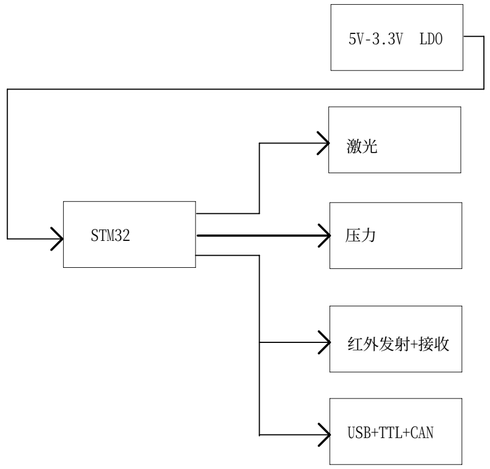

COMPANY: mRobot Inc					
TITLE: US Sensor					
DRAWN: <Drawn By>	DATED: <Drawn Date>	CODE: <Code>	SIZE: A2	DRAWING NO: <Drawing Number>	REV: <Revision>
CHECKED: <Checked By>	DATED: <Checked Date>				
QUALITY CONTROL: <QC By>	DATED: <QC Date>				
RELEASED: <Released By>	DATED: <Release Date>	SCALE: <Scale>		SHEET: 1 OF 3	

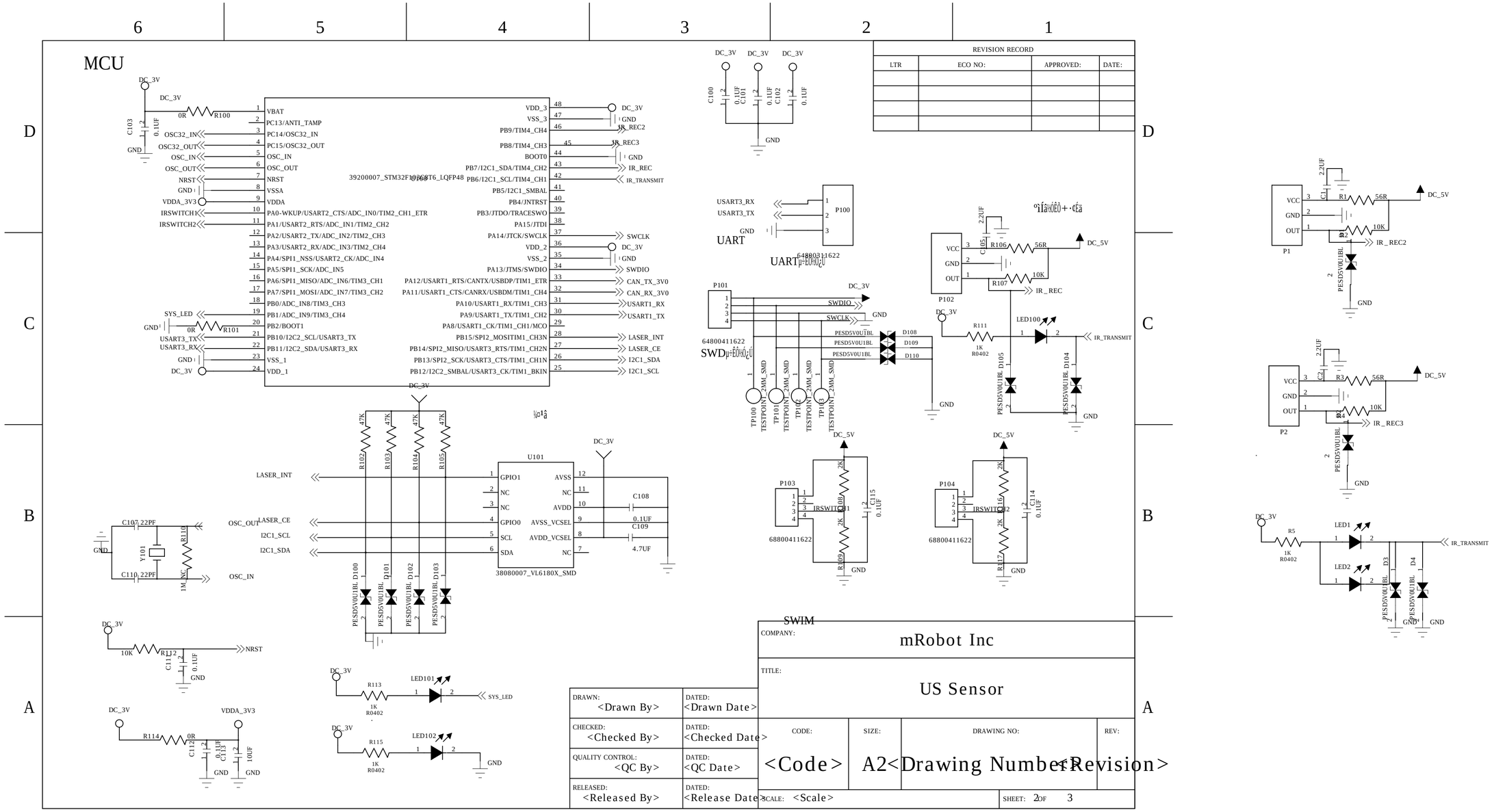

REVISION RECORD			
LTR	ECO NO:	APPROVED:	DATE:

DRAWN: <Drawn By>	DATED: <Drawn Date>	COMPANY: mRobot Inc			
CHECKED: <Checked By>	DATED: <Checked Date>	TITLE: US Sensor			
QUALITY CONTROL: <QC By>	DATED: <QC Date>	CODE: <Code>	SIZE: A2	DRAWING NO: <Drawing Number>	REV: <Revision>
RELEASED: <Released By>	DATED: <Release Date>	SCALE: <Scale>		SHEET: 2 OF 3	

REVISION RECORD			
LTR	ECO NO:	APPROVED:	DATE:

X86 Í ¨ Ñ ¶ ¿ Ú

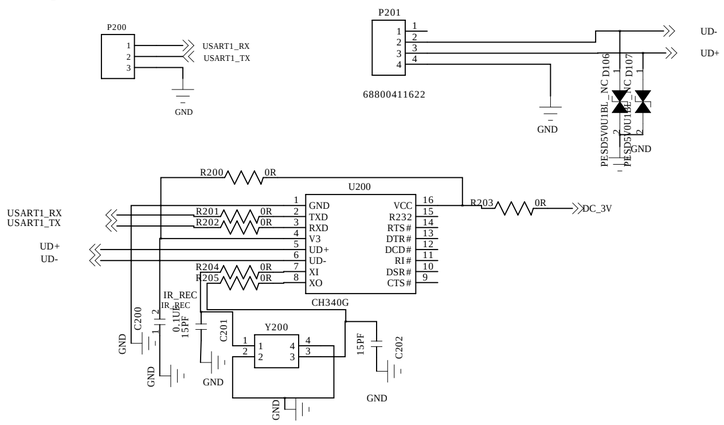

CAN

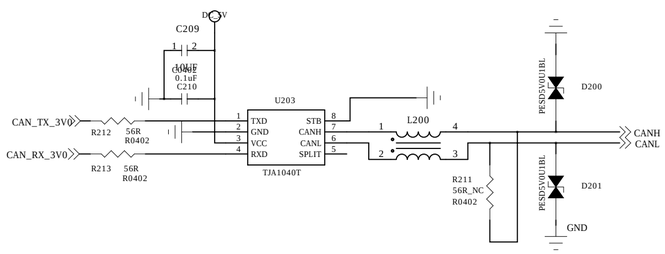

5V× ª 3.3V/3V

VOUT=1.235V*(1+R1/R2)

R2 should be between 22k and 47k

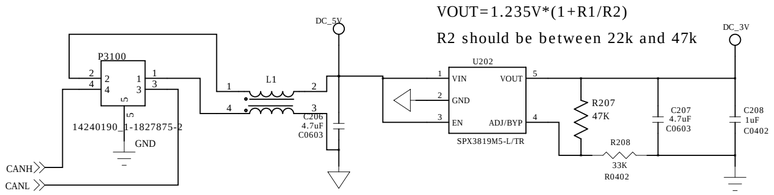

DRAWN: <Drawn By>	DATED: <Drawn Date>	COMPANY: mRobot Inc			
		TITLE: US Sensor			
CHECKED: <Checked By>	DATED: <Checked Date>	CODE: <Code>	SIZE: A2	DRAWING NO: <Drawing Number>	REV: <Revision>
QUALITY CONTROL: <QC By>	DATED: <QC Date>				
RELEASED: <Released By>	DATED: <Release Date>	SCALE: <Scale>		SHEET: 3 OF 3	