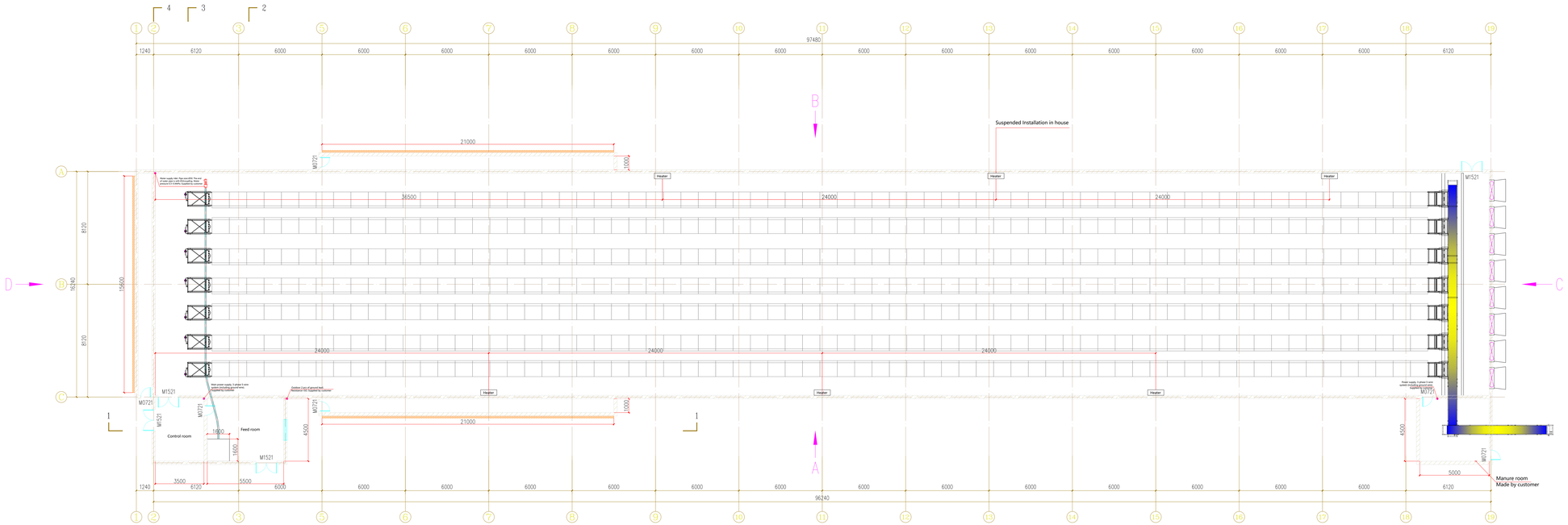


TOP VIEW: EQUIPMENT LAYOUT

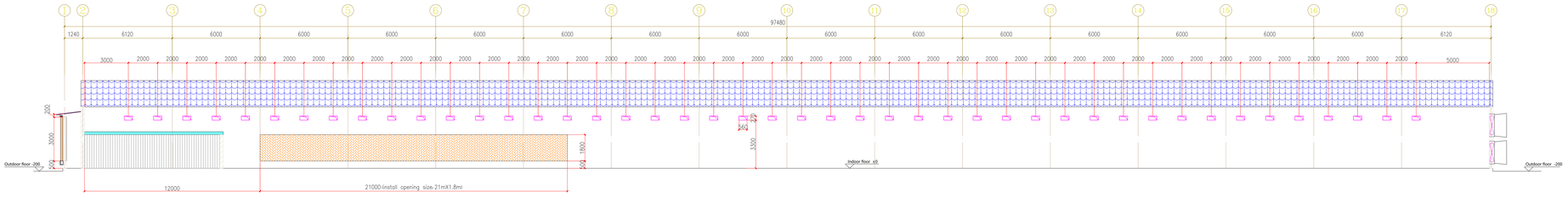


A-DIRECTION SIDE VIEW

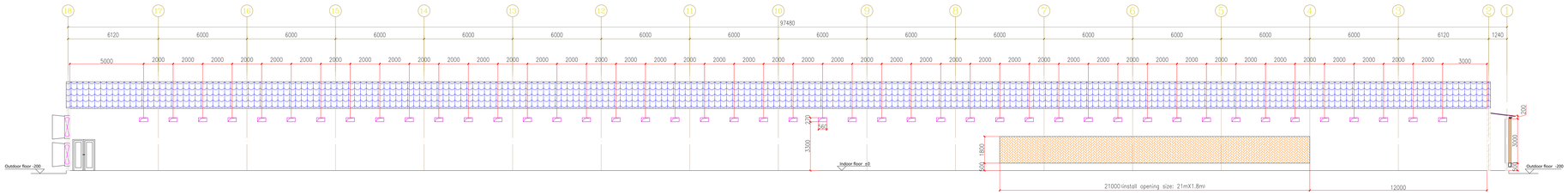


B-DIRECTION SIDE VIEW

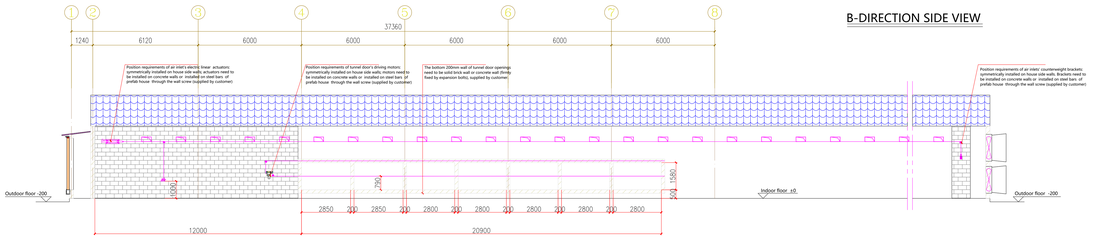


1-1 VIEW: SIDEWALL TUNNEL DOOR LAYOUT

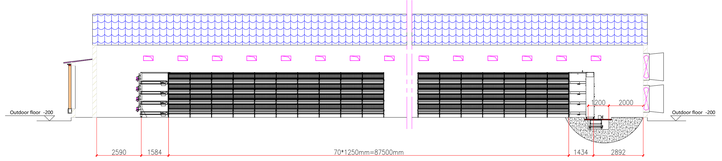


2-2 VIEW: CAGE LAYOUT

EQUIPMENT LIST OF BROILER CAGE HOUSE (16MX96MX4.2M, 7 ROWS & 4 TIERS)

| | Description | | Specifications | QTY | Remarks |
|---|---|---|---|---|---|
| House information | Broiler house | | Width(span)×Length×Height=16m×96m×4.2m | 1 house | Net dimensions |
| | Bird population | Harvest weight: 2.0kg | Stocking: 60,760 birds/house<br>Feeding: 60,760 birds×2 cells | 61,760 birds/house | Manual harvest |
| Cage system | Cage body | Model: D1000-4 | Unit cage dimensions: L×W×H=1000mm×1250mm×450mm, Net weight: 38kg/set | 490 sets | 4 tiers |
| | Cage front | Model: D1000-4 | | 7 sets | 4 tiers |
| | Cage rear | Model: D1000-4 | | 7 sets | 4 tiers |
| Climate control system | Climate controller | SI-8000PLUS | | 1 set | |
| | Fan | 36" fiberglass cone fan | 3-phase 220v 50Hz 1.5kw motor. | 16 sets | Tunnel ventilation |
| | Air inlet system | | Installation opening: 560mm×1750mm | 96 sets | 96 pcs in side walls, with electrical linking to pad, to cool and light-proof ventilation |
| | Cooling pad system | Cooling pad on end wall | 15.6m×3.52m | 1 set | Cooling pad with PVC water trough, hanging installation |
| | | Cooling pad on side wall | 21.0m×2.52m | 2 sets | Cooling pad with PVC frame and deep water trough, hanging installation |
| | Tunnel door system | Tunnel door on end wall | 15.0m×0.96m×3 leaves | 1 set | |
| | | Tunnel door on side wall | 21.0m×0.78m×3 leaves | 2 sets | |
| | Lighting system | LED light tube | | 14 pcs | Installed opposite each other |
| | Heating system | Space heater | | 6 pcs | Heating power: 50kw, fuel: LPG |
| | Medicating | Pump medicator | | 1 set | |
| Feeding system | Feeding | Integral traveling hoppers | | 1 set | |
| | Main feed line | | Big main hopper and H-25 Hooper line | 1 set | Big main hopper capacity: 1,200kg |
| Drinking system | In-cage drinking | Nipple drinking line | | 28 pcs | |
| Drainage system | In-cage drainage | Drainage | | 7 sets | |
| Manure removal system | In-cage manure removal | PP belt | | 28 pcs | |
| | Cross manure removal | PVC belt | | 1 set | |
| | Giant manure removal | PVC belt | | 1 set | |

Special instructions:

1. The layouts is not for construction. The construction drawings shall be designed by professional architect.
2. The roof and other structures shall be determined according to the local wind load. If the size in the drawing is not consistent with the size on site,please refer to the final completed dimensions on site.
3. If the customer wants to change any dimensions of the layouts, the customer shall negotiate with the supplier and get the confirmation. Or the supplier is not responsible for the possible loss caused by the changes of dimensions.
4. The installation surface of air inlets and tunnel doors should be flat, and there should be no column protruding from the inner wall of the house, or The customer is responsible for the formation and sealing work. It is suggested to construct under the guidance of supplier's after-sales engineer.
5. If there are columns and beams in the openings of tunnel doors, the inner surface of columns and beams shall be level with the inner surface of the poultry house and around the openings there are 200mm solid walls or concrete cast to ensure that expansion bolts are fixed firmly.
6. The required thickness of cement floor is no less than 80mm. The ground floor inside the house should be higher by 200mm than outside.
7. At the lengthwise direction, the error of the ground floor flatness in house is no more than 30mm. At the widthwise direction, the error of the ground floor error flatness is no more than 20mm. It is high in the middle and low on both sides with slope 0.5%.
8. The dimensions of all openings and holes are the net dimensions after finishing cement work.
9. The hardened-surface road at house rear is width 5.0m and distance is 5.0m from end wall.
10. The suspension points distance for main feed line is 2.0m. The load-bearing per suspension point is no less than 80kg. The specific way will depend on the house structure on site. The installation conditions are provided by customer.
11. The sealing, thermal, waterproof work(especially the manure ditch) is made by customer.

# BROILER CAGE HOUSE (16MX96MX4.2M)

Total No. of cell cages: 70×7R×4T=1,960 sets
Cell cage dimensions: W×L×H=1000mm×1250mm×450mm.
Bird population per house: 60,760 birds(2.0kg)

Zi Farming

青岛兴仪电子设备有限责任公司
QINGDAO XINGYI ELECTRONIC EQUIPMENT CO., LTD.

| | | | |
|---|---|---|---|
| 设 计 DESIGN | | EQUIPMENT LAYOUT OF BROILER CAGE HOUSE (MANUAL HARVEST, 16MX96MX4.2M, 7R & 4T) | |
| 审 核 CHECK | | | |
| 批 准 AUTHORIZE | | 比 例 SCALE | 日 期 DATE |

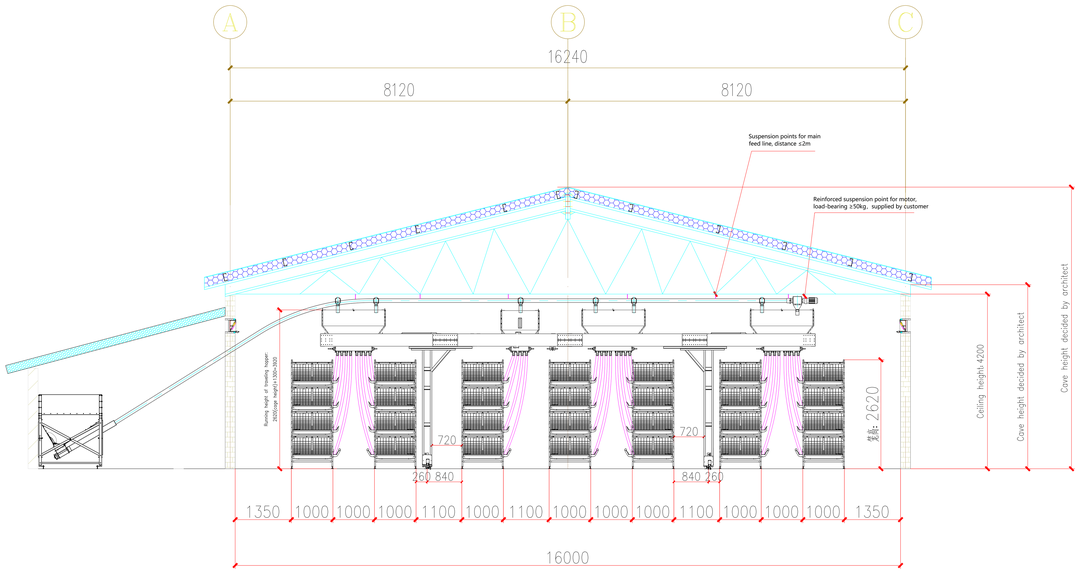


3-3 VIEW: CAGE LAYOUT

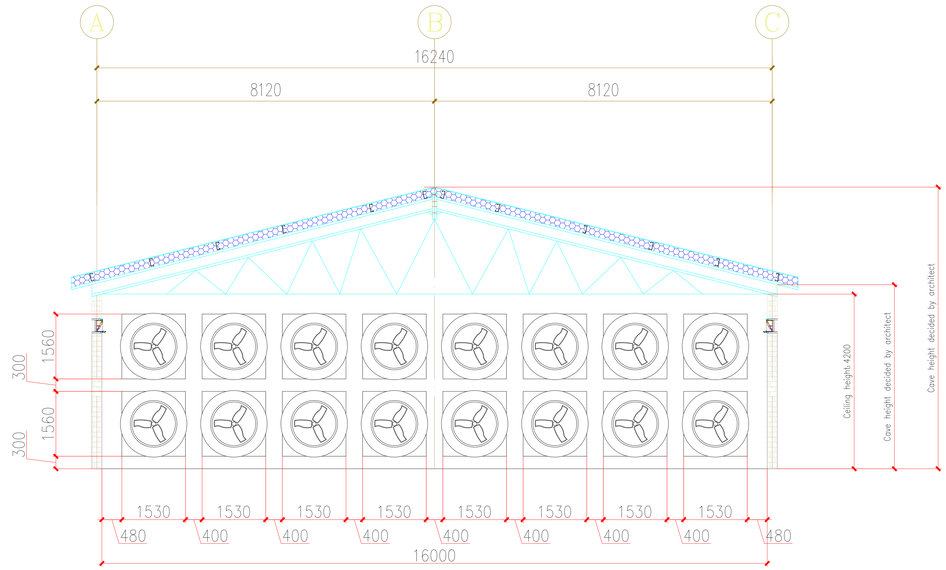


C-DIRECTION VIEW: TUNNEL FAN LAYOUT (54" FRP cone fan)

| | | | | | |
|---|---|---|---|---|---|
| Zi Farming | 青 岛 兴 仪 电 子 设 备 有 限 责 任 公 司<br>QINGDAO XINGYI ELECTRONIC EQUIPMENT CO., LTD. | | | | |
| | 设 计<br>DESIGN | | LAYOUT OF CAGES AND TUNNEL FANS AND MAIN FEED LINE | | |
| | 审 核<br>CHECK | | | | |
| | 批 准<br>AUTHORIZE | | 比 例<br>SCALE | 日 期<br>DATE | |

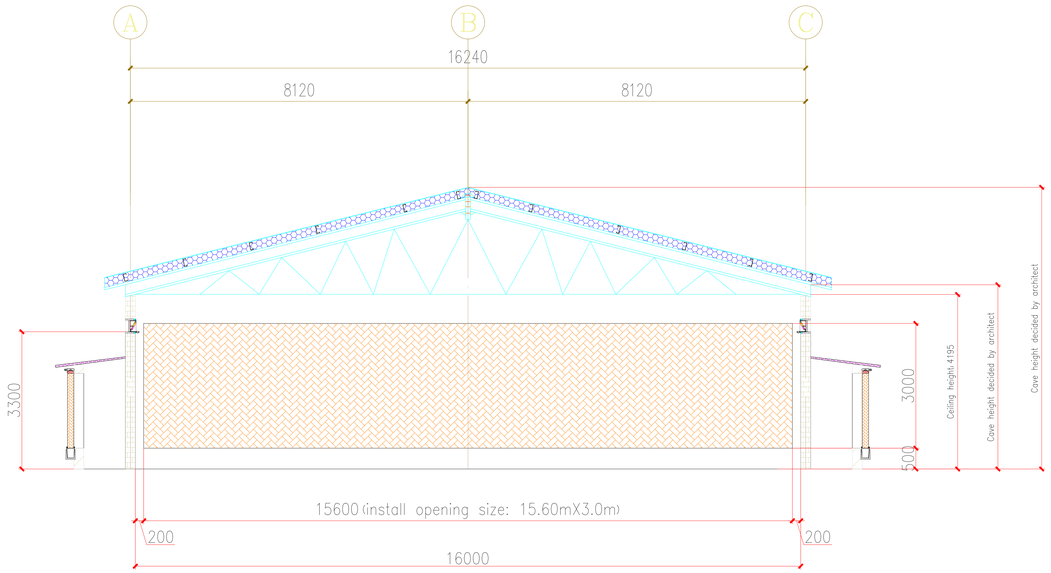


D-DIRECTION VIEW: END-WALL COOLING PAD LAYOUT

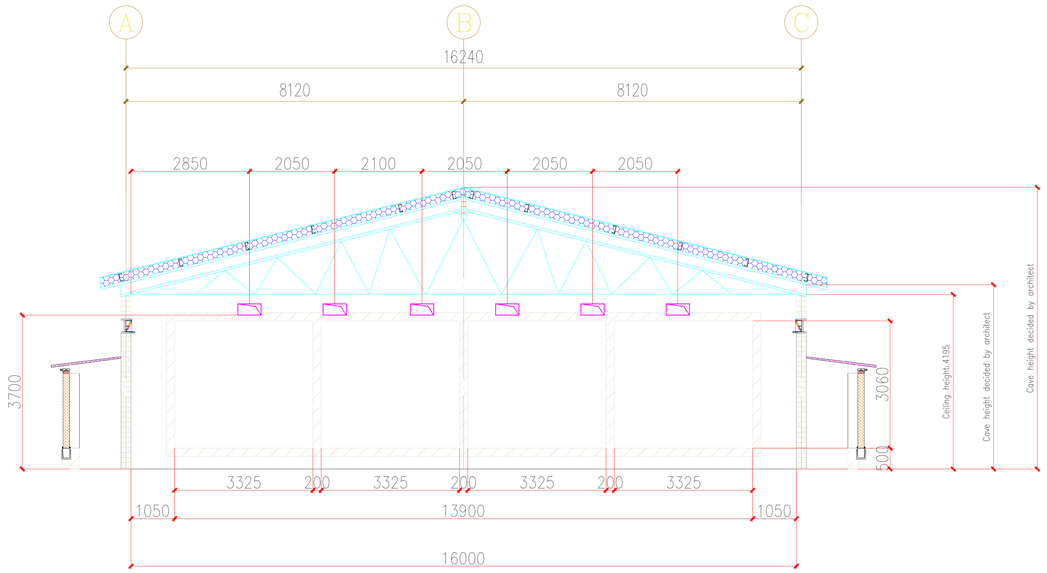


4-4 VIEW: END-WALL TUNNEL DOOR OPENING LAYOUT

| | | | | | |
|---|---|---|---|---|---|
| Yi Farming | 青 岛 兴 仪 电 子 设 备 有 限 责 任 公 司<br>QINGDAO XINGYI ELECTRONIC EQUIPMENT CO., LTD. | | | | |
| | 设 计<br>DESIGN | | LAYOUT OF COOLING PAD AND TUNNEL DOOR ON END WALL | | |
| | 审 核<br>CHECK | | | | |
| | 批 准<br>AUTHORIZE | | 比 例<br>SCALE | 日 期<br>DATE | |

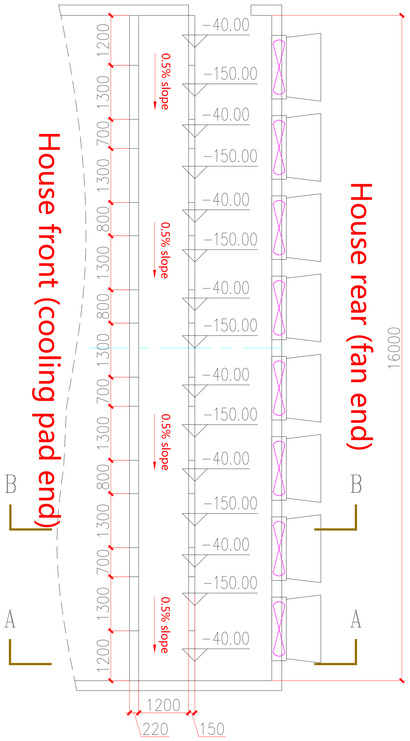


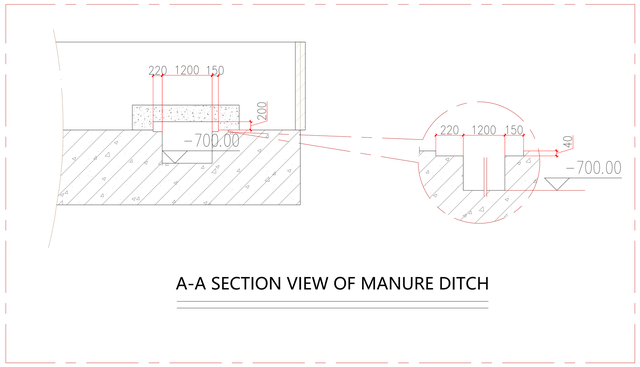


A-A SECTION VIEW OF MANURE DITCH

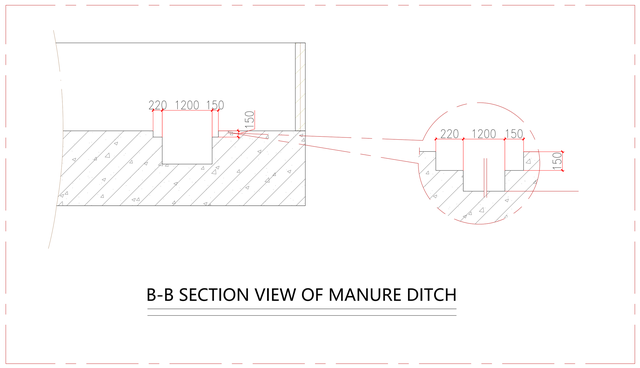


B-B SECTION VIEW OF MANURE DITCH

Technical requirements:

1. The cross manure ditch shall be waterproof.
2. The ditch level error < ±10mm;
3. The ditch bottom is made with 0.5% slope, the outlet end is the lowest (-700mm).

LAYOUT OF CROSS MANURE DITCH

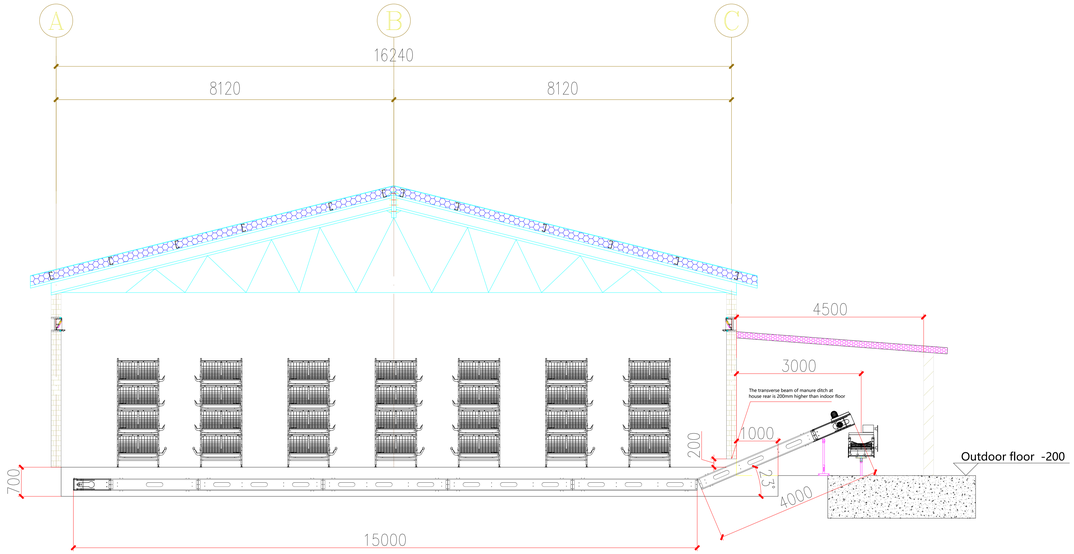


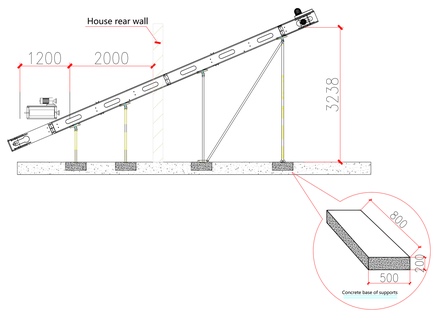


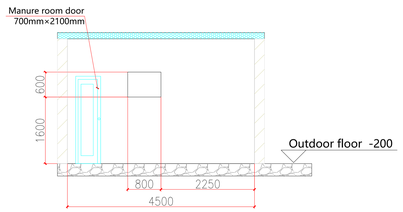


Technical requirements:

1. Waterproof work is necessary for manure ditch
2. The elevation of outdoor floor is -200mm.
3. The stairs surrounding manure room must be waterproof.

LAYOUT OF MANURE REMOVAL

| | | | | | |
|---|---|---|---|---|---|
| Ei Farming | 青岛兴仪电子设备有限责任公司 QINGDAO XINGYI ELECTRONIC EQUIPMENT CO., LTD. | | | | |
| | 设计 DESIGN | | LAYOUT OF MANURE REMOVAL SYSTEM | | |
| | 审核 CHECK | | | | |
| | 批准 AUTHORIZE | | 比例 SCALE | | 日期 DATE |

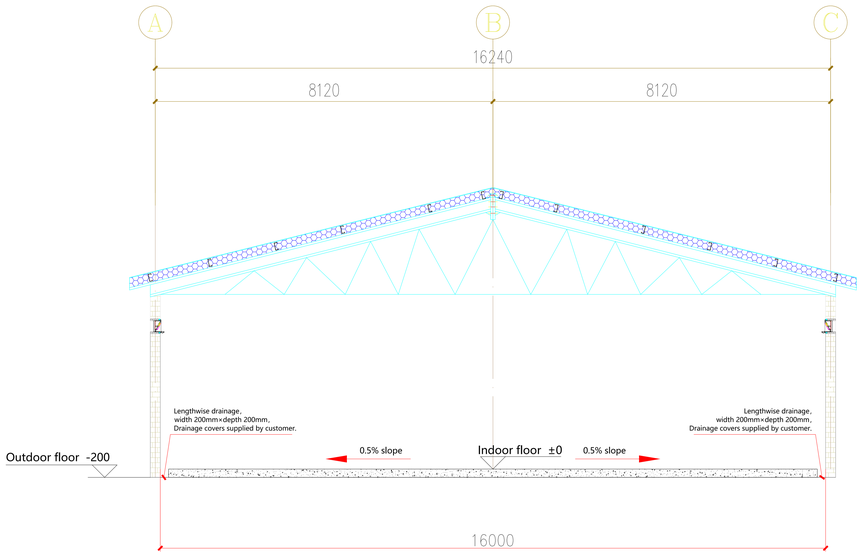


# DRAINAGE LAYOUT

## AIR INLET OPENING (BRICK WALL, PREFAB WALL)

### Installation of air inlet

Technical requirements:

1. The net opening for air inlet is 560mmx270mm. The diagonal error<10mm.
2. Make sure that all openings are at the same horizontal level. The horizontal level error <10mm.
3. If the air inlet is installed and fixed by PU foam sealing agent, the net dimensions of the opening after cement work shall be 560mmx270mm. The diagonal error <10mm.
4. If the house wall is prefabricated panel, the opening of air inlets shall be edged, and make sure the net opening size is 560mmx270mm after edged.
5. If the rain cover for air inlet is installed, the house wall 100mm surrounding the opening must be solid and strong enough for expansion bolt.
6. The above requirements shall be made the customer before installation.

# LAYOUT OF AIR INLET OPENING

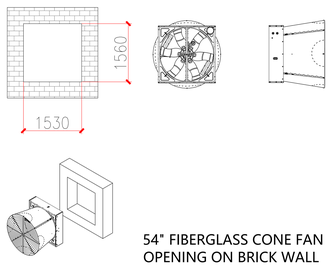


54" FIBERGLASS CONE FAN
OPENING ON BRICK WALL

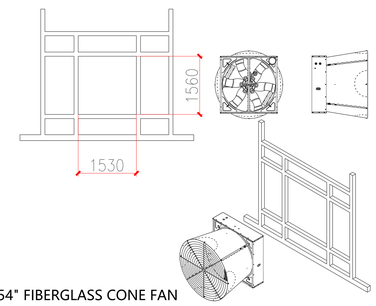


54" FIBERGLASS CONE FAN
OPENING ON PREFAB WALL

Technical requirements:

1. Installation opening should be square and flat with accurate sizes. The deviation of opening position is not allowed. The side length deviation should be less than 5mm. The diagonal deviation should be less than 10mm.
2. The inner surface of the fan opening is level with no height difference between inside and outside. Use a level gauge to detect the opening surface. Put the fan body naturally into the opening, and do not force it into the opening.
3. After installation, the gap between the fan and the wall shall be sealed by the customer.

# LAYOUT OFFAN OPENING (BRICK WALL, PREFAB WALL)

| | | | | | |
|---|---|---|---|---|---|
| Zi Farming | 青 岛 兴 仪 电 子 设 备 有 限 责 任 公 司<br>QINGDAO XINGYI ELECTRONIC EQUIPMENT CO., LTD. | | | | |
| | 设 计<br>DESIGN | | LAYOUT OF DRAINAGE,<br>AIR INLET AND FAN OPENING | | |
| | 审 核<br>CHECK | | | | |
| | 批 准<br>AUTHORIZE | | 比 例<br>SCALE | | 日 期<br>DATE |