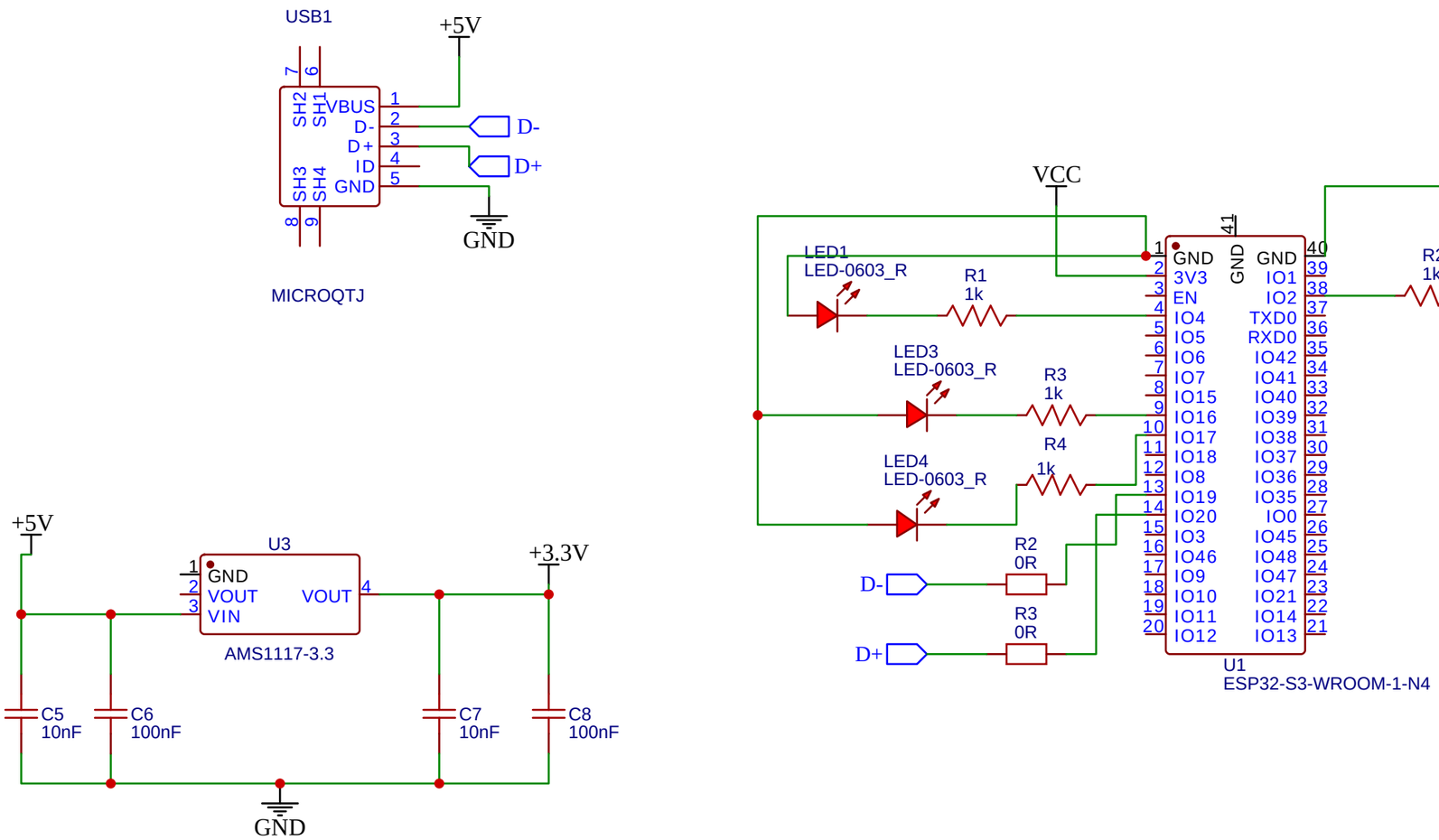

TITLE: 03 - Sa í das Digitais	REV: 1.0
Company: IFPB	Sheet: 1/1
Date: 2025-09-24 Drawn By: Luis Felipe Nonato	