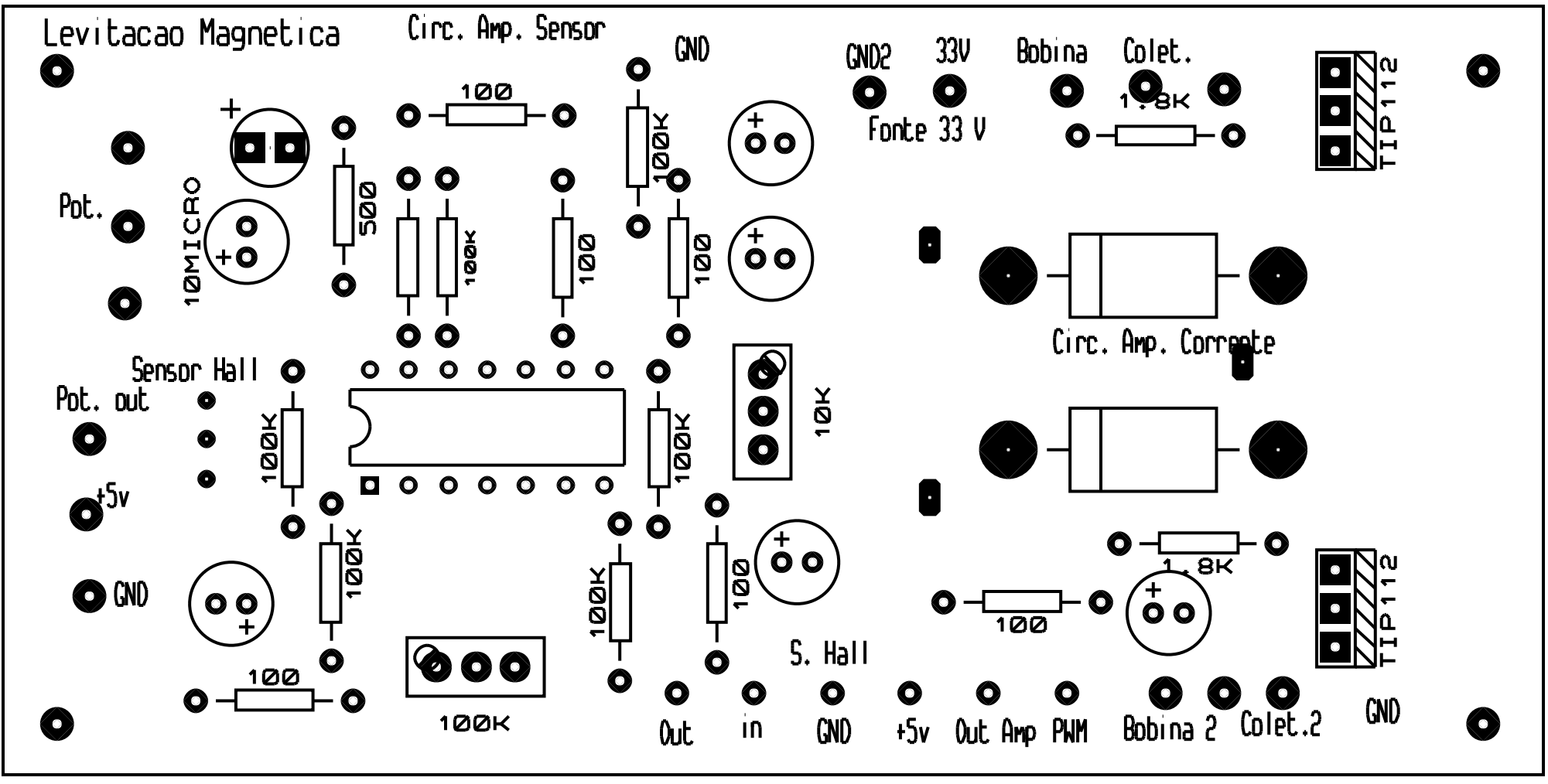
Levitacao Magnetica
Circ. Amp. Sensor
GND
GND2
33V
Bobina
Colet.
Fonte 33 V
1.8K
TIP112
Pot.
10MICRO
500
100
100K
100
100K
100
Circ. Amp. Corrente
Sensor Hall
Pot. out
+5v
GND
100K
100K
10K
100K
100K
100
1.8K
100
100
100K
S. Hall
Out
in
GND
+5v
Out Amp
PWM
Bobina 2
Colet.2
GND
TIP112