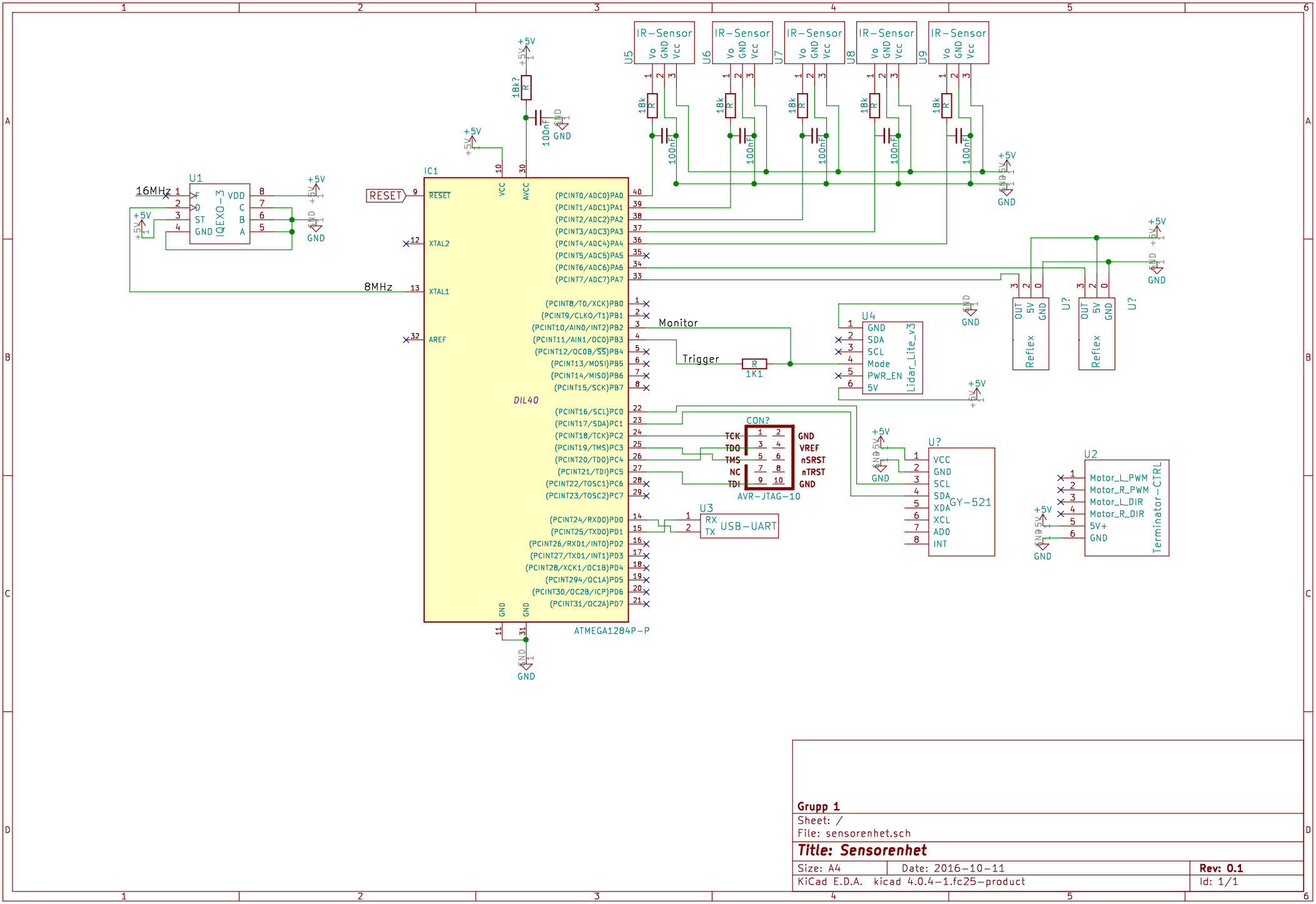

Grupp 1

Sheet: /

File: sensorenhet.sch

Title: Sensorenhet

Size: A4	Date: 2016-10-11	**Rev: 0.1**
KiCad E.D.A. kicad 4.0.4-1.fc25-product		Id: 1/1