Ir Avoidance Trash Can (missing EN pin in schematic)

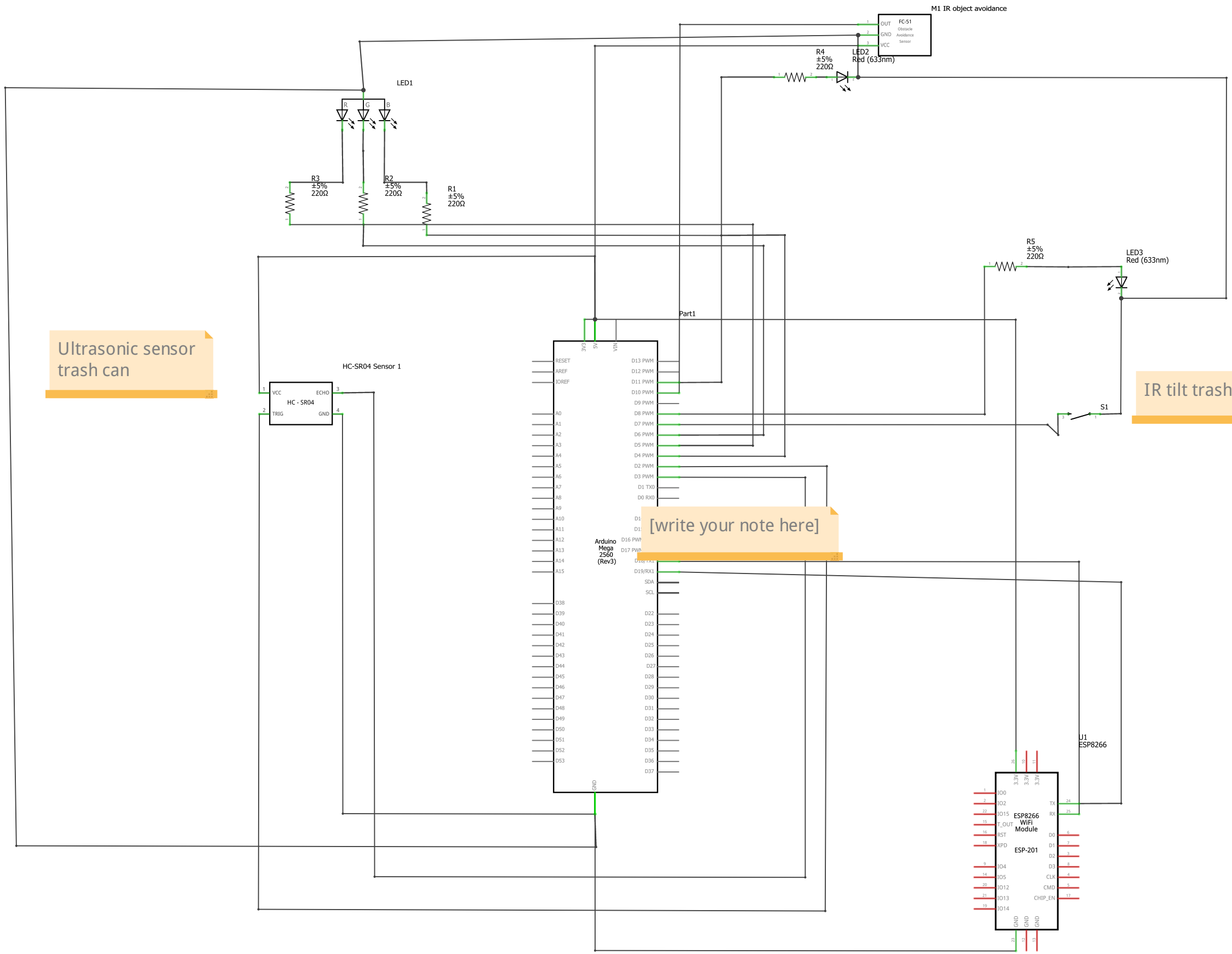

Ultrasonic sensor trash can

IR tilt trash can

[write your note here]

fritzing