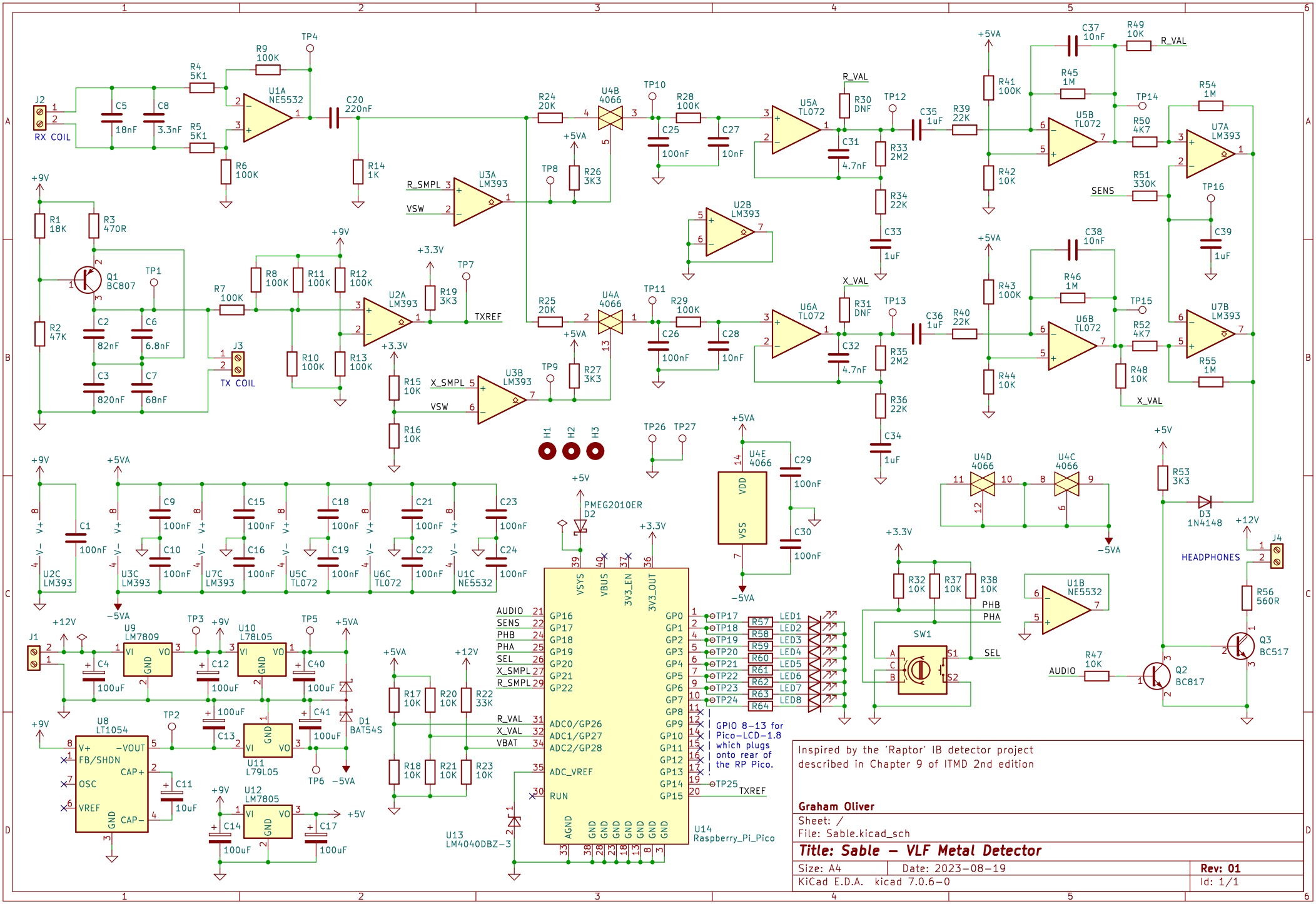
RX COIL
TX COIL
HEADPHONES
U1A NE5532
U1B NE5532
U2A LM393
U2B LM393
U3A LM393
U3B LM393
U4A 4066
U4B 4066
U4C 4066
U4D 4066
U4E 4066
U5A TL072
U5B TL072
U6A TL072
U6B TL072
U7A LM393
U7B LM393
U2C LM393
U3C LM393
U7C LM393
U5C TL072
U6C TL072
U1C NE5532
Q1 BC807
Q2 BC817
Q3 BC517
D1 BAT54S
D2 PMEG2010ER
D3 1N4148
U8 LT1054
U9 LM7809
U10 L78L05
U11 L79L05
U12 LM7805
U13 LM4040DBZ-3
U14 Raspberry_Pi_Pico
SW1
R_SMPL
VSW
X_SMPL
R_VAL
X_VAL
SENS
TXREF
AUDIO
PHB
PHA
SEL
VBAT
GPIO 8-13 for Pico-LCD-1.8 which plugs onto rear of the RP Pico.
Inspired by the 'Raptor' IB detector project described in Chapter 9 of ITMD 2nd edition
Graham Oliver
Sheet: /
File: Sable.kicad_sch
Title: Sable – VLF Metal Detector
Size: A4
Date: 2023-08-19
Rev: 01
KiCad E.D.A. kicad 7.0.6-0
Id: 1/1