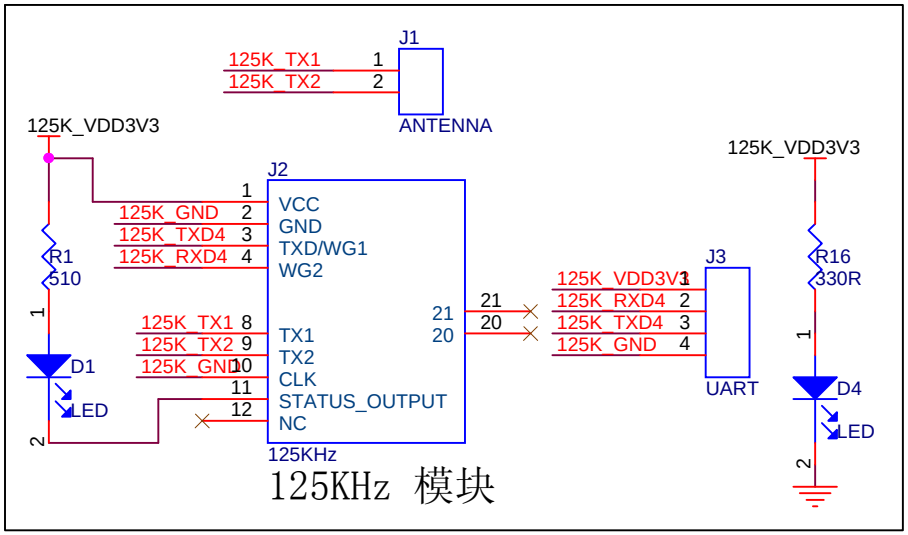

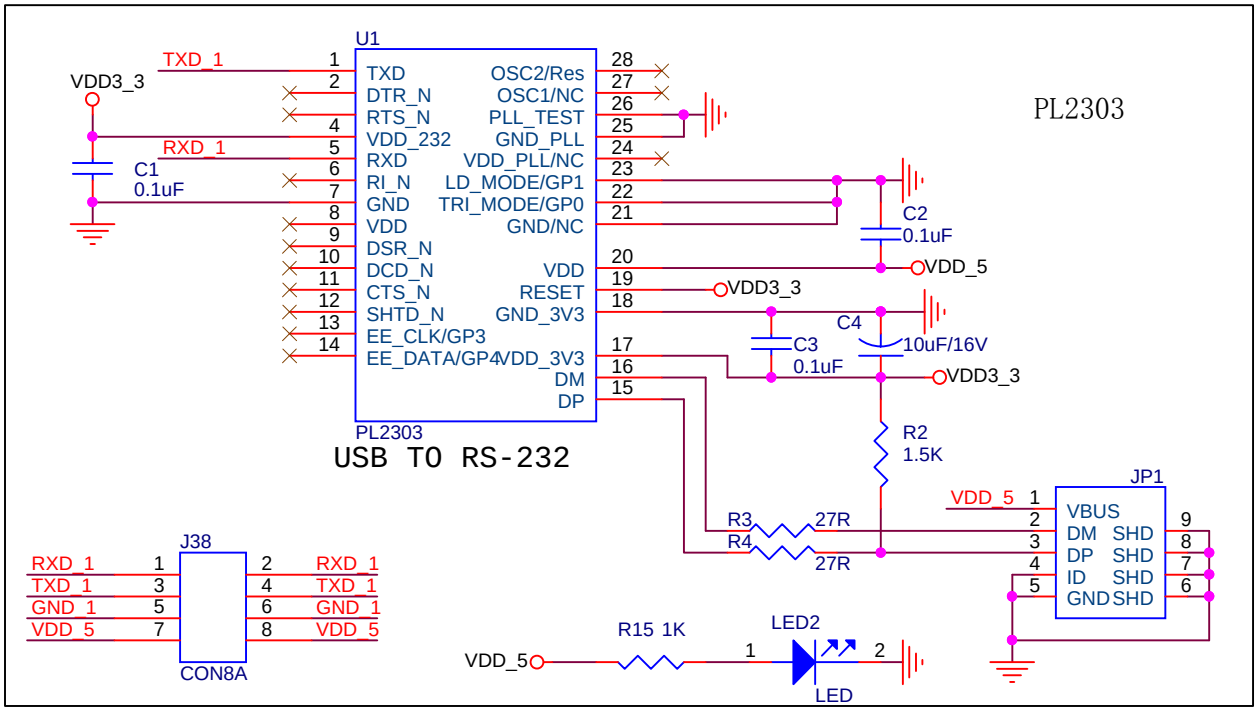

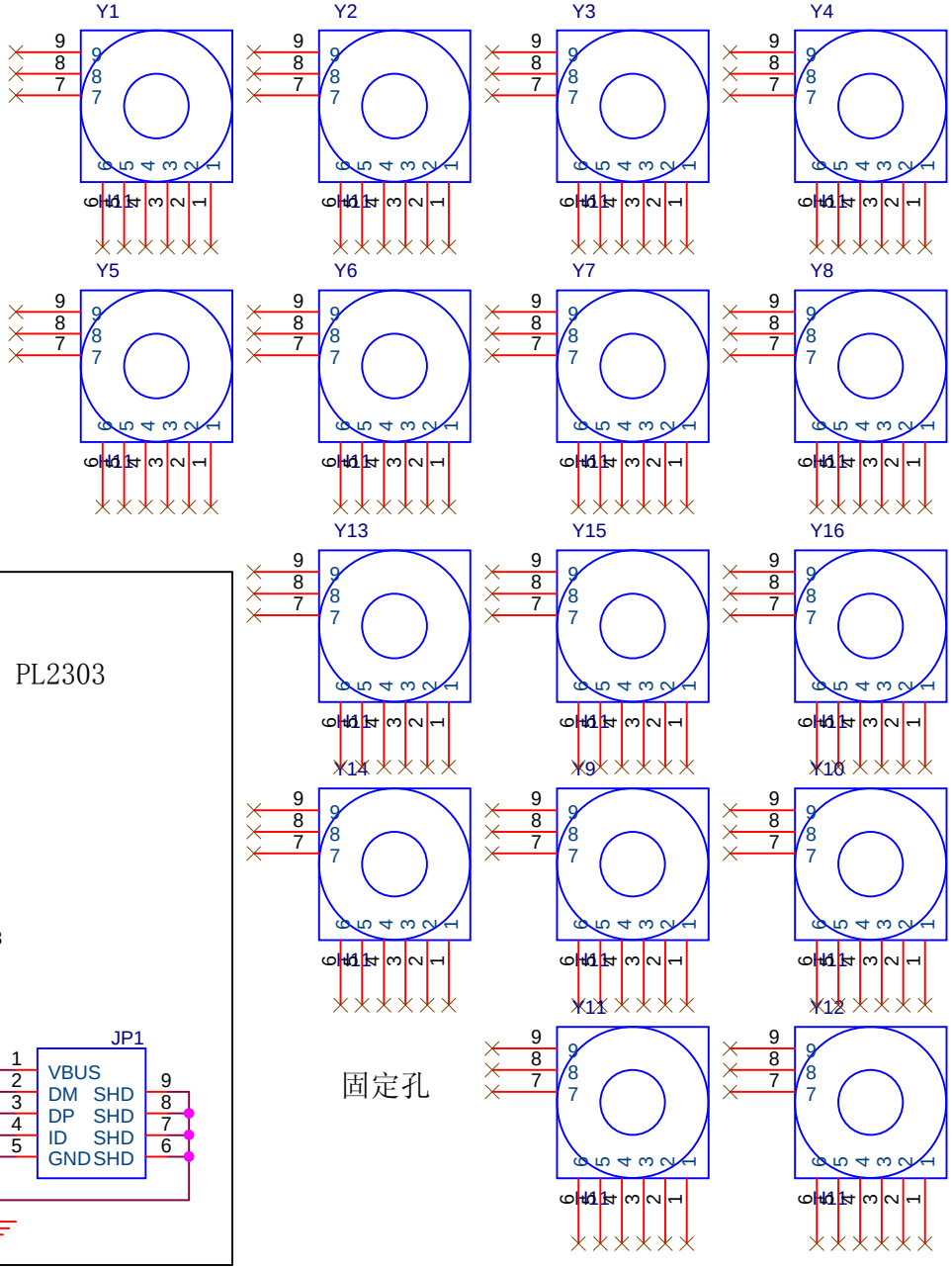

Title	<Title>	
Size A	Document Number <Doc>	Rev <RevCode>
Date: Friday, November 15, 2013	Sheet 1 of 2	

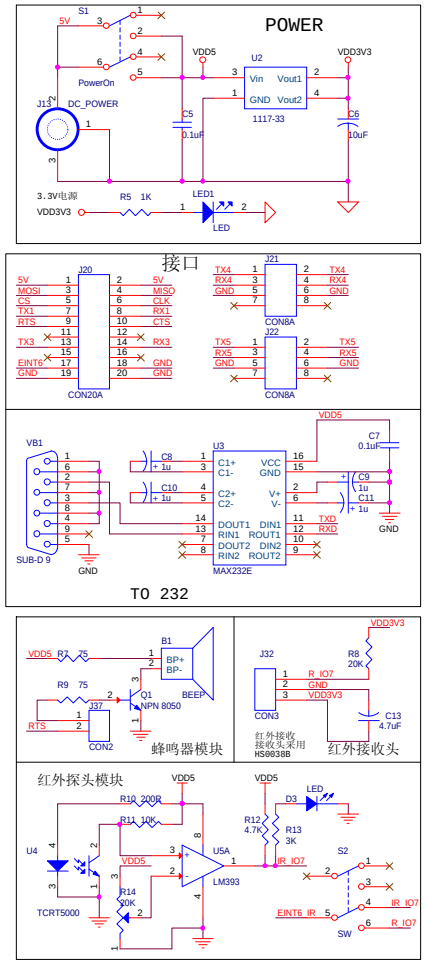

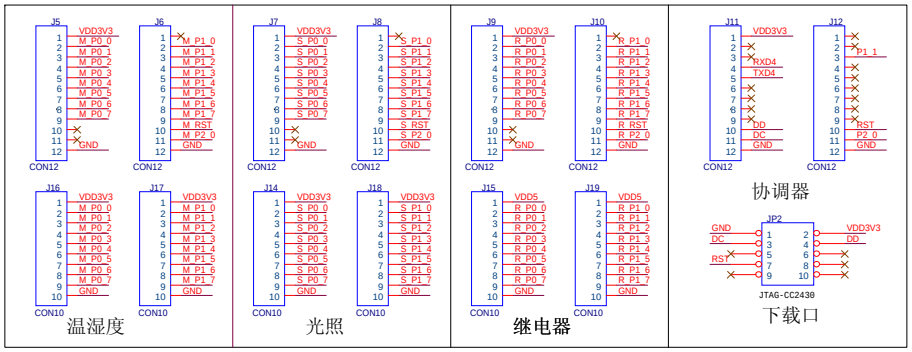

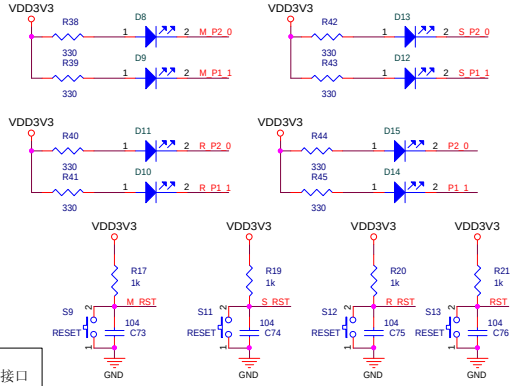

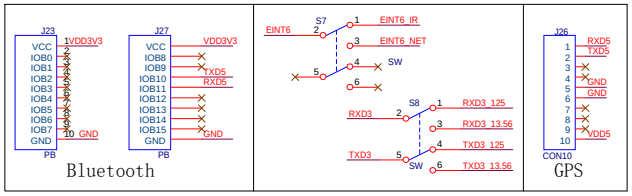

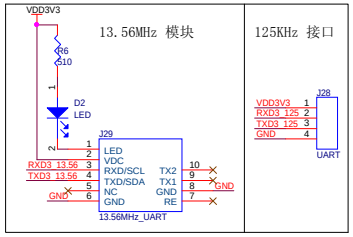

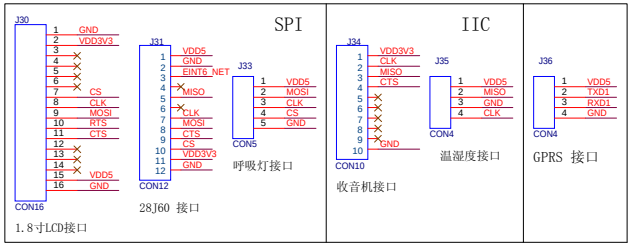

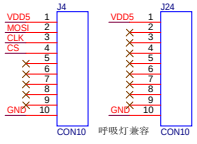

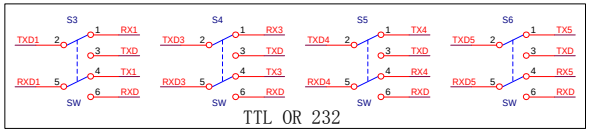

Title	<Title>	
Size C	Document Number <Doc>	Rev <RevCode>
Date: Friday, November 15, 2013	Sheet 2 of 2	