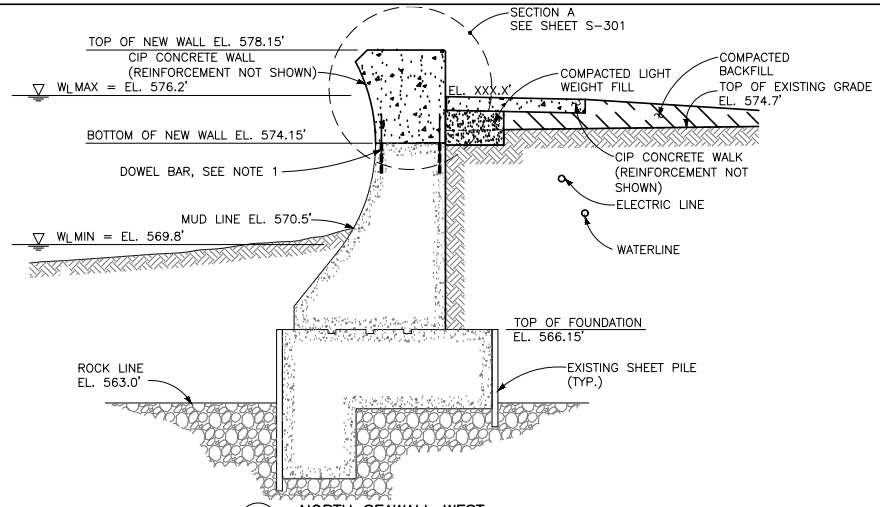

1 NORTH SEAWALL WEST

SCALE: 3/8"=1'-0"

2 0 2 4 6

SCALE OF FEET

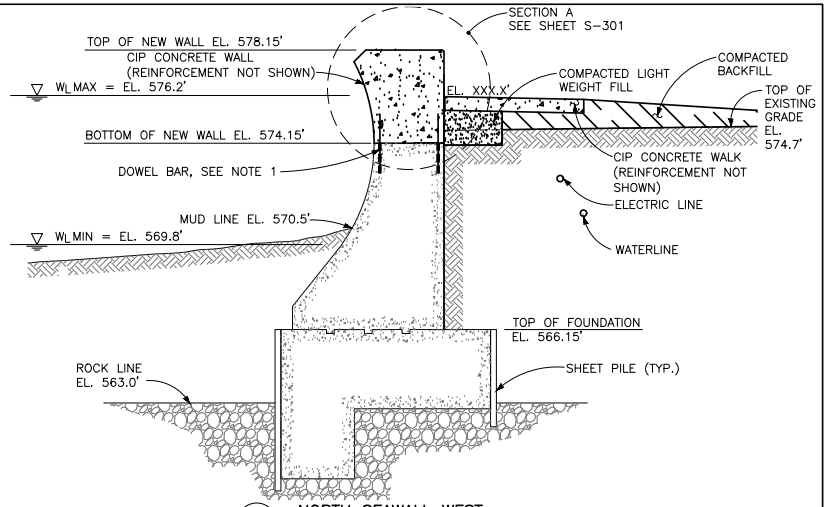

2 NORTH SEAWALL WEST

SCALE: 3/8"=1'-0"

2 0 2 4 6

SCALE OF FEET

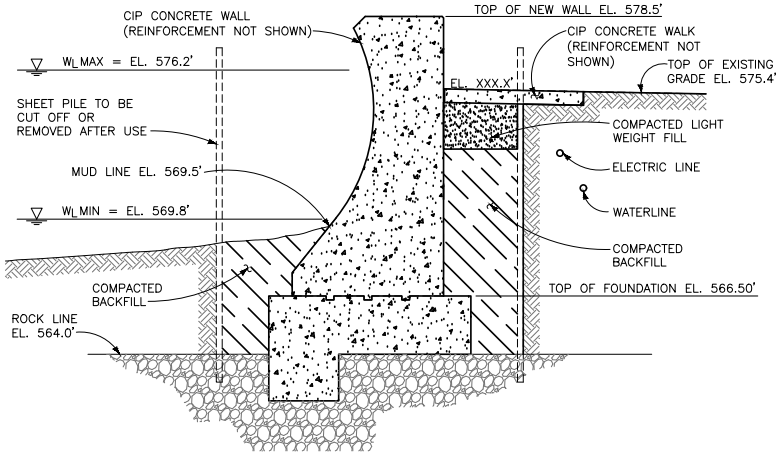

3 NORTH SEAWALL CENTER

SCALE: 3/8"=1'-0"

2 0 2 4 6

SCALE OF FEET

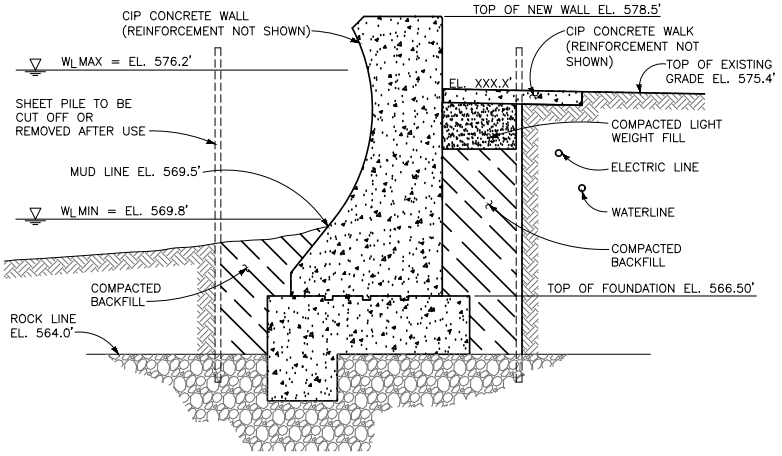

4 NORTH SEAWALL CENTER

SCALE: 3/8"=1'-0"

2 0 2 4 6

SCALE OF FEET

FULL SIZE DRAWINGS = 22"x34" 0" 1"
BAR MEASURES 1" LONG

NOT FOR CONSTRUCTION	DESIGNED: D.LOBEDAN CADD P.NELSON TECH. REVIEW: R.SCHULTE DATE: APRIL 17,2020	SUB SHEET NO. S-201	TITLE OF SHEET STRUCTURAL NORTH SEAWALL SECTIONS PERRY'S VICTORY AND INTERNATIONAL PEACE MEMORIAL	DRAWING NO. 370 152968 PMIS/PKG NO. 200745 SHEET X OF XX

3/25/20 11:13 PNELSON R22 C:\PW_WORKDIR\DEN03\JEG_PNELSON\D0672755\S-201-N SEAWALL SECTIONS.DWG XREFS: .\D0672754\XG-BORDER_PEVLDWG; .\D0672754\XG-STORM WALL SECTIONS.DWG;