METACAULK® FIRESTOP SEALANTS

Metacaulk® 1000

Intumescent, Water-Based Firestop Sealant

RECTORSEAL

Features and Benefits:

- Prevents spread of fire through joint openings and through-penetrations
- No dilution or mixing required
- For areas under constant vibration and movement or fire-rated gypsum wallboard partitions, concrete walls or floors, wood floors and concrete or corrugated steel deck floor/ceiling assemblies
- Excellent freeze-thaw
- For interior use - paintable
- VOC compliant
- 3 year shelf life
- UL Classified systems up to 4 hrs.
- Complies to UL required Accelerated Aging and High Humidity Testing
- STC rating 62
- **Test Standards:** ASTM E814 (UL 1479) & ASTM E1966 (UL 2079), Mold inhibitor tested to ASTM G21

Applications:

- Metal pipes
- Insulated pipes
- Fiberglass & plastic pipes
- Wall construction joints
- Power & telephone cables

PART NO.	DESCRIPTION	QTY
66640	10.3 oz. cartridge	12
66303	30 oz. cartridge	12
66312	20.2 oz. foil pack	12
66305	1 gal.	4
66307	2 gal.	1
66309	5 gal.	1

Metacaulk® MC 150+

General Purpose Firestop Sealant

Features and Benefits:

- One component, general purpose fire-rated sealant and smoke seal for construction joints and through-penetrations on both horizontal and vertical surfaces
- Non-sag caulking grade sealant that is easy to apply as well as to retrofit
- Can be used in areas under constant vibration or movement
- Flexible
- Non-sag
- UL Classified up to 4 hrs.
- 3 year shelf life
- Color: Red
- STC rating 65
- **Test Standards:** ASTM E814 (UL 1479) & ASTM E1966 (UL 2079), Mold inhibitor tested to ASTM G21

Applications:

- Metal pipes
- Insulated pipes
- Fiberglass and plastic pipes
- Wall construction joints
- Power and telephone cables

PART NO.	DESCRIPTION	QTY
66648	10.3 oz. cartridge	12
66383	30 oz. cartridge	12
66385	20.2 oz. foil pack	12
66389	5 gal.	1

Metacaulk® 350i

Intumescent Firestop Sealant

Features and Benefits:

- One component, general purpose sealant and smoke seal
- Intumescent, water-based, non-sag caulking grade sealant that is easy to apply and great for retrofits
- Suitable for dynamic movement
- Flexible
- Excellent freeze-thaw
- For interior use - paintable
- 3 year shelf life
- Complies to UL required
- Accelerated Aging and High
- Humidity Testing
- Color: Red
- STC rating 53
- **Test Standards:** ASTM E814 (UL 1479) & ASTM E1966 (UL 2079)

Applications:

- Metal pipes
- Insulated pipes
- Fiberglass & plastic pipes
- Wall construction joints
- Power & telephone cables

PART NO.	DESCRIPTION	QTY
66648	10.3 oz. cartridge	12
66383	30 oz. cartridge	12
66385	20.2 oz. foil pack	12
66389	5 gal.	1

STANLEY_SUPPLY.indd 172-173

RECTORSEAL

METACAULK® FIRESTOP SEALANTS

Metacaulk® 835+

Elastomeric, Silicone Firestop Sealant

Features and Benefits:

- For systems where dynamic movement is expected
- Resistant to chemical exposure
- Exterior / interior use
- Weather/chemical resistant
- Excellent moisture resistance
- 2 year shelf life
- Color: Gray
- STC rating 55
- Meets ASTM C920, Type S, Grade NS, Class 25, Use NT, M, G, A, O
- **Test Standards:** ASTM E814 (UL 1479) & ASTM E1966 (UL 2079)

PART NO.	DESCRIPTION	QTY
66645	10.15 oz. cartridge	12
66019	5 gal.	1
66300	20.2 oz caulk grade	12
66301	20.2 oz self-leveling	12

Applications:

- Cable and cable trays and EMT
- Insulated/uninsulated steel pipe
- Construction / control joints
- Interior expansion joints

Metacaulk® 950

Non-Combustible Firestop Sealant

Features and Benefits:

- Formulated with inorganic materials
- Not for use in vibration or wet environments
- Gas/Smokeless under fire exposure
- Hardened cure
- Interior application
- 2 year shelf life
- Color: Beige
- **Test Standards:** ASTM E814 (UL 1479) & ASTM E1966 (UL 2079)

Applications:

- Cable and cable trays
- EMT
- Insulated and uninsulated steel pipe
- Construction and control joints
- Interior expansion joints

PART NO.	DESCRIPTION	QTY
66643	10.3 oz. cartridge	12

Metacaulk® 1200

Spray & Caulk Firestop Mastic

Features and Benefits:

- Cures to an elastomeric membrane seal suitable for dynamic movement
- Mastic spray for fast, economical installation on long joint runs
- Flexible with freeze-thaw
- 3 year shelf life
- Color: Red or White
- STC rating 65
- UL Classified up to 4 hrs
- **Test Standards:** ASTM E814 (UL 1479) & ASTM E1966 (UL 2079), Mold inhibitor tested to ASTM G21

Applications:

- Construction joints such as: top of the wall, curtain wall perimeter, expansion, and control
- Cable trays
- HVAC Ductwork
- Deflection
- Track Wall Systems

PART NO.	DESCRIPTION	COLOR	QTY
66379	5 gal. spray	Red	1
66292	20.2 oz. caulk grade	Red	12
66015	30 oz. caulk grade	Red	12
66387	5 gal. caulk grade	Red	1
66529	5 gal. spray (USA)	Red	1

PART NO.	DESCRIPTION	COLOR	QTY
66527	5 gal. spray	White	1
66294	20.2 caulk grade	White	12
66525	30 oz. caulk grade	White	12
66526	5 gal. spray (USA)	White	1
66386	5 gal caulk grade	White	1

C70 Industrial Coating

Acrylic Latex for Power Cables

Features and Benefits:

- Acrylic latex heavy duty spray coating designed to prevent vertical and horizontal spread of fire along grouped or single communication or power cables
- Compatible with and adheres to typical cable jacketing materials
- No cable derating
- Interior use
- Easy to apply
- Cures to a flexible seal
- 2 year shelf life
- Color: Gray or White

Applications:

- Suitable for areas of limited movement

PART NO.	DESCRIPTION	QTY
50250	5 gal. gray	1
50253	5 gal. white	1

METACAULK® FIRESTOP SEALANTS

RECTORSEAL

Cover Guard™

Fire-Rated Gasket for Electrical Boxes

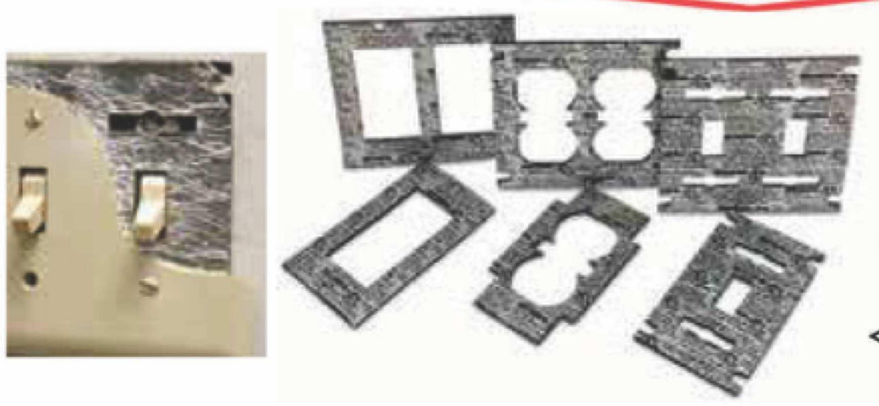

Features and Benefits:

- Good sound insulator
- Easy to install
- Highly intumescent
- STC rating 54
- **Test Standards:** Complies to UL required Accelerated Aging and High Humidity Testing

Applications:

- A single component fire-rated gasket for use with electrical boxes to comply with the "24 inch rule"
- Fits under the cover plate and does not take up volume

PART NO.	DESCRIPTION	QTY
66270	Double receptacle	50
66272	Single receptacle	50
66274	Double switch	50
66276	Single switch	50
66265	Single decor	50
66266	Double decor	50

Box Guard™

Fire-Rated Pad for Electrical Boxes

Features and Benefits:

- Adheres to back of electrical box
- Non-conductive
- Highly intumescent
- STC rating 53
- **Test Standards:** Complies to UL required Accelerated Aging and High Humidity Testing

Applications:

- One component fire-rated for use in electrical boxes
- It is inserted on the inside back wall of an 66366 Single box 50 electrical box prior to wiring

PART NO.	DESCRIPTION	QTY
66366	Single box	50
66367	Double box	50
66369	4-11/16" x 4-11/16"	50

Putty Pads

Fire-Rated Pad for Electrical Boxes

Features and Benefits:

- Applied by hand
- No asbestos fillers
- Pads - STC rating 60
- For interior use
- Adheres to all common building surfaces
- **Test Standards:** ASTM E814 (UL 1479)

Applications:

- Putty sticks are used to seal around penetrating items through fire-rated walls, floors and within blank openings
- Putty pads are used to maintain the hourly rating of fire-rated walls containing electrical metal outlet boxes and to reduce sound transmission
- Hand moldable with no curing

PART NO.	DESCRIPTION	QTY
66345	18 cu./in. - stick	12
66340	6" x 7" x 1/8" thick	20
66335	7" x 7" x 1/8" thick	20

STANLEY_SUPPLY.indd 174-175

GREAT STUFF 12084890 12OZ PRO FOAM GUN CLEANER 02024

- Attaches to any GREAT STUFF PRO Series Dispensing gun to void uncured foam after use (sold separately)
- Use push-to-spray attachment on can to clean up uncured foam from various surfaces
- Absolutely should be purchased alongside any of the GREAT STUFF PRO Gun Foams and Dispensing Guns
- Creates air & moisture tight seal between can and Dispensing Gun

PRODUCT NO.
42502024

GREAT STUFF 187273 20 OZ PRO WINDOW & DOOR EXPANDING FOAM GUN GRADE

- Proven not to bow window & door frames
- Draft block, hole/crack filler
- Super adhesion to most surfaces
- Forms a durable, airtight, waterproof bond
- Cures in less than 1 hour, tack free in 6 minutes,-
- trims in 30 minutes
- Moisture resistant, (25 to 120 degrees Fahrenheit-
- temperature operating range)
- Freeze/thaw stable, sandable/paintable

PRODUCT NO.
42500516

Abesco FP200 Fire Rated Expanding Foam - 24oz Can

- FP200 fr expanding foam 24 oz can.Tested to ASTM E-814 and BS476: Part 20
- Expands to fill and Seal. Extremely Versatile Solution. CFC free

PRODUCT NO.
FP200

GREAT STUFF SMART DISPENSER PESTBLOCK 12OZ

- 99112809 GREAT STUFF SMART DISPENSER PESTBLOCK 12OZ
- NEW, patent-pending, easier to use
- No drips, less mess, foam stops when you stop
- Reusable, use it again and again

PRODUCT NO.	SIZE
42501208	12 OZ.

GREAT STUFF 197711 20 OZ PRO WINDOW & DOOR FOAM (STRAW)

DAP ON THE JOB SINCE 1865

TOUCH 'N SEAL

- Proprietary low-pressure formula guaranteed not to-
- bow or bend window & door frames
- This means reduced customer complaints or callbacks
- Forms a durable, airtight, & waterproof bond
- One 20 oz. can of Window & Door will foam up to six-
- average sized residential windows

PRODUCT NO.
42500520

POWERFOAM™ TRIGGERFOAM™

DEWALT

Expanding polyurethane foam

- Can be applied to concrete, brick, block, wood, steel, aluminum and other metals
- No CFC's, no PCB's, no urea formaldehyde

PRODUCT NO.	SIZE
08130N	12 OZ.
08132N	29 OZ.

GREAT STUFF 157901 12 OZ GAPS & CRACKS MINIMAL EXPANSION FOAM

DUPONT

- All-purpose for filling & sealing holes, cracks,-
- gaps, & other voids less than 1/2"
- All directional straw dispensing
- Adheres to most surfaces including wood, metal,-
- masonry, glass, & most plastics
- Permanent, rigid, & nonshrinking
- Waterproof/water resistant

PRODUCT NO.
42500154

GREAT STUFF PRO™ GAPS & CRACKS *expanding spray foam sealant*

DUPONT

- Sprays into gaps and cracks up to 3" in diameter
- Can be used as a fireblock sealant
- Reusable for up to 30 days
- Long lasting, airtight, water-resistant seal
- 24 ounces

PRODUCT NO.
42500789

AHD

GENERAL PURPOSE ACCESS DOOR
FOR ALL SURFACE TYPES

The **AHD** is designed for a **quick and easy installation** on non-rated vertical and horizontal surfaces made of drywall or any other type of material. Its rounded mitered corners, concealed pin hinge and 3/8" return all around the door make it the sturdiest door on the market. The AHD prevents sagging, as compared to flat door panels, and requires fewer locks.

DESCRIPTION

Material: 16 gauge cold rolled steel
Hinge: hidden pin hinge continuous piano type on doors over 24" (height or width)
Lock / latch: screwdriver operated cam latch
Finish: high quality white powder coat primer
Packaging: individually wrapped, 1 per box

POPULAR OPTIONS

Material: stainless steel 304 #4 (brushed finish)
Lock / latch: key operated cylinder cam latch, hex head cam latch, pinned hex head cam latch, handle operated cam latch, mortise preparation for cylinder. (cylinder optional)
Gasketing: neoprene gasket

LEED ready: This product contributes to LEED® credits. Visit **www.cendrex.com** for more information.

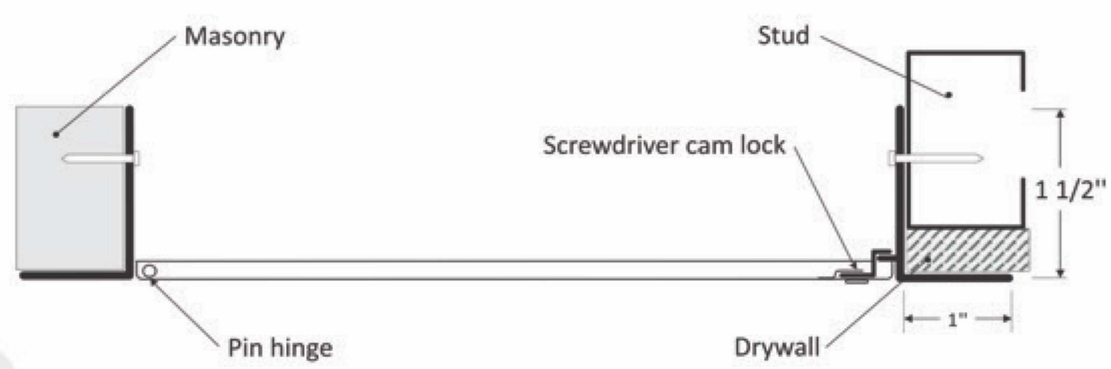

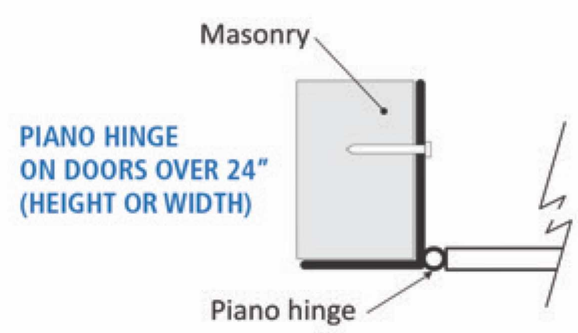

Table of standard sizes
[other sizes available upon request]

PRODUCT CODE	DOOR SIZE W x H inches (MM)	NUMBER OF LOCKS	SHIPPING WEIGHT LBS	KG
AHD	6 x 6 (152 x 152)	1	2	0.9
AHD/GYP/PLY	8 x 8 (203 x 203)	1	3	1.4
AHD	8 x 12 (203 x 304)	1	4	1.8
AHD/GYP/PLY	10 x 10 (254 x 254)	1	4	1.8
AHD/GYP/PLY	12 x 12 (304 x 304)	1	5	2.3
AHD	12 x 16 (304 x 406)	1	6	2.8
AHD	12 x 18 (304 x 457)	1	7	3.2
AHD	12 x 24 (304 x 609)	1	8	3.6
AHD/GYP/PLY	14 x 14 (356 x 356)	1	7	3.2
AHD/GYP/PLY	16 x 16 (406 x 406)	1	8	3.6
AHD/GYP/PLY	18 x 18 (457 x 457)	1	10	4.5
AHD	18 x 24 (457 x 609)	1	13	5.9
AHD	20 x 20 (508 x 508)	1	11	5
AHD	22 x 22 (558 x 558)	1	13	5.9
* AHD	22 x 30 (558 x 762)	2	17	7.7
* AHD	22 x 36 (558 x 914)	2	19	8.6
* AHD/GYP/PLY	24 x 24 (609 x 609)	1	15	6.8
* AHD	24 x 30 (609 x 762)	2	20	9.1
* AHD/GYP/PLY	24 x 36 (609 x 914)	2	22	10
* AHD	24 x 48 (609 x 1219)	2	28	12.7
* AHD	30 x 30 (762 x 762)	4	23	10.4
* AHD	36 x 36 (914 x 914)	4	31	14.1

AHD-GYP

GENERAL PURPOSE DOOR
WITH DRYWALL FLANGE

The LHD model is recommended for over 1296 sq. inches
Rough wall opening = door size + 1/4" or + 6mm
*Piano hinge on doors over 24 inches (height or width)

cendrex

STANLEY_SUPPLY.indd 176-177

FLUSH ACCESS DOORS

UF-5000 Universal Flush

- One piece trim flange will not rack, sag or distort
- Unique continuous concealed hinge will not bind
- Door panel has rounded safety corners providing an architecturally pleasing appearance
- **Applications:** Installation in drywall, paster, masonry, tile or any flush surface

SPECIFICATIONS	
Door:	Flush to frame with rounded safety corners
Finish:	Steel: 5-stage iron phosphate preparation with prime-coat of White alkyd baking enamel OR Stainless Steel: Type 304 - #4 satin polish
Hinge:	Continuous, concealed
Material:	Up to 16" X 16" - 16 gage, 18 gage mounting frame, over 16" X 16" - 14 gage door, 16 gage mounting frame
Mounting:	Frame: One piece outer flange welded to mounting frame
Optional Latches/Locks	Cylinder lock and key, allen head cam latch, spanner head cam latch
Standard Latch:	Stainless steel screwdriver operated cam latch

NOMINAL DOOR SIZE (W X H)	NO. OF LATCHES	WEIGHT
6" x 6"	1	2 lb.
8" x 8"	1	2.7 lb.
8" x 12"	1	3.6 lb.
10" x 10"	1	3.6 lb.
12" x 12"	1	4.7 lb.
12" x 16"	2	6 lb.
12" x 18"	2	7 lb.
12" x 24"	2	8.5 lb.
14" x 14"	1	6.2 lb.
16" x 16"	2	7.6 lb.
16" x 24"	2	12.5 lb.
18" x 18"	2	11.2 lb.
18" x 24"	2	15 lb.
22" x 22"	4	16.3 lb.
22" x 30	5	21 lb.
22" x 36"	5	26 lb.
24" x 24"	4	18 lb.
24" x 30"	5	22.5 lb.
24" x 36"	5	26.6 lb.
24" x 48"	5	38 lb.
30" x 30"	5	27.5 lb.
36" x 36"	5	39 lb.

DW-5040 Flush for Drywall

- Formed door panel with flanges on four sides
- Unique concealed hinge, door flange is a perforated taping bead with pre-punched hole
- **Applications:** Designed specifically for installation in drywall walls and ceilings after the drywall has been installed

SPECIFICATIONS	
Door:	Formed door panel, flanged on four sides, Integral perforated taping bead adds extra rigidity
Finish:	5 stage iron phosphate preparation with white baked-on polyester powder coat on door panel. Frame to be mill finish
Hinge:	Concealed
Material:	20 gauge galvanized formed door panel, 26 gauge galvanized frame
Standard Latch:	Slot screwdriver operated cam latch Optional Latches/Locks: Cylinder lock & key; allen head cam latch; spanner head cam latch, torx

NOMINAL DOOR SIZE (W X H)	NO. OF LATCHES	WEIGHT
6" x 6"	1	3 lb.
8" x 8"	1	3.5 lb.
10" x 10"	1	4.5 lb.
12" x 12"	1	6 lb.
14" x 14"	1	7.5 lb.
16" x 16"	2	9.5 lb.
18" x 18"	2	11.5 lb.
22" x 22"	4	15 lb.
24" x 24"	4	19 lb.
24" x 36"	5	28 lb.
30" x 30"	5	27.5 lb.
36" x 36"	5	39 lb.

6/15/24 12:51 PM

DUCT ACCESS DOORS

RD-5090 Round Duct / Galvanized Steel

- Pull and catch lock system
- Gasketing on the door assures a tight seal without obstruction in the air system
- **Applications:** Economical access to round ducts

SPECIFICATIONS	
Door / Door Frame:	16 gauge galvanized steel
Finish:	Mill Finish
Gasketing:	1/8" thick by 1" wide closed cell neoprene
Hinge:	Continuous aluminum piano hinge
Standard Latch:	Plated steel pull and catch

SIZE	OPENING	WEIGHT
6" x 4"	5"	1 lb.
7" x 5"	6"	1.25 lb.
8" x 6"	7"	1.5 lb.
9" x 8"	8"	1.75 lb.
10" x 8"	9"	2 lb.
11" x 9"	10"	3 lb.

SIZE	OPENING	WEIGHT
13" x 10"	12"	3.5 lb.
15" x 13"	14"	4 lb.
17" x 13"	16"	5.5 lb.
19" x 15"	18"	6 lb.
19" x 17"	20"	6.75 lb.
20" x 17"	24"	7.25 lb.

Note: Duct opening is normal door size plus 3/8"

PLASTIC ACCESS DOORS

PA-3000

- High impact styrene plastic with U.V. stabilizers
- Hinged with a removable feature
- **Applications:** Easy access to walls and ceilings

SPECIFICATIONS	
Door / Door Frame:	1/8" high impact styrene plastic with U.V. stabilizers. Flush to frame — rounded safety corners, one piece outside flange with 3/4" deep mounting frame
Finish:	White, with textured exposed surfaces
Hinge:	Concealed
Latch:	Snap latches allow door to fit tightly within frame door

STANDARD DOOR SIZE	WEIGHT
4" x 6"	.5 lb.
6" x 9"	.5 lb.
8" x 8"	1 lb.
12" x 12"	.5 lb.
14" x 14"	.75 lb.
14" x 29"	4 lb.
18" x 18"	2.25 lb.
22" x 22"	4 lb.
24" x 24"	4.75 lb.

Note: Wall opening is width + 3/8"

Contour Cam Latch Access Door

- Hidden magnetic closing mechanism
- **Material:** 16 gauge steel frame and door
- **Hinge:** Concealed double arm pantograph system
- **Lock / Latch:** Concealed magnets for locking mechanism
- **Finish:** High quality white powder coat finish

PART NO.	SIZE
CTR16X30	16" x 30"

STANLEY_SUPPLY.indd 178-179

PFN

FIRE RATED UNINSULATED ACCESS DOOR
FOR WALLS ONLY

Intertek

The **PFN** is **not insulated** and can **only be used on fire rated walls**. It comes with a 1" flange for an easy flush installation on any type of surface material. As per **UL** and NFPA 80 standards, once the installation is complete and the provided springs installed, this door will be self closing and self locking. It should not be used in situations where protection against temperature elevation is required. The largest fire rated PFN door available is: (36" x 36" or 1296 sq. in.).

Fire rated by

Intertek

FIRE RATED UNINSULATED DOOR
WITH DRYWALL FLANGE

DESCRIPTION

FIRE RATING: For vertical wall assemblies only:
CERTIFIED TO STANDARDS: UL 10C, UL 10B (2009), NFPA 252 (2012), CAN/ULC S104 (R1985), CAN/ULC S104 (2010).
RATING ACHIEVED: 1-1/2 hours
MAXIMUM SIZE: 36" wide x 36" high (914 mm x 914 mm). Maximum area of 1296 in². Tolerance on height and width limitation is ± 3" (76 mm) as long as the area does not exceed 1296 in².
TEMPERATURE RISE: No rating achieved.

Material: 16 gauge cold rolled steel
Hinge: continuous piano hinge
Lock / latch: self latching tool-key operated latch and/or ring operated latch, both included
Inside panel release: standard on all doors over 12" x 12"
Automatic panel closer: standard on all doors
Finish: high quality white powder coat primer
Packaging: individually wrapped, 1 per box

POPULAR **OPTIONS**

Material: stainless steel #4 (brushed finish),
Lock / latch: Key operated slam latch, handle operated slam latch, mortise preparation for cylinder (cylinder optional), hex head slam latch , mortise deadbolt lock
Masonery anchor: available on all sizes

PFN-HS SECURITY for high security PFN-HS: optional 16 gauge cold rolled steel frame and 14 gauge galvanneal steel door

LEED ready: This product contributes to LEED® credits. Visit **www.cendrex.com** for more information.

Table of standard sizes
[other sizes available upon request]

DOOR SIZE - W x H INCHES (MM)	NUMBER OF LOCKS	SHIPPING WEIGHT LBS	KG
8 x 8 (203 x 203)	1	5	2.3
10 x 10 (254 x 254)	1	7	3.2
12 x 12 (304 x 304)	1	8	3.6
14 x 14 (355 x 355)	1	10	4.5
16 x 16 (406 x 406)	1	12	5.5
18 x 18 (457 x 457)	1	14	6.4
22 x 22 (558 x 558)	1	18	8.2
22 x 30 (558 x 762)	1	22	10.0
22 x 36 (558 x 914)	2	27	12.2
24 x 24 (609 x 609)	1	22	10.0
24 x 36 (609 x 914)	2	29	13.2
30 x 30 (762 x 762)	1	30	13.6
32 x 32 (812 x 812)	2	33	15
36 x 36 (914 x 914)	2	39	17.7

Rough wall opening = door size + 1/4" or + 6mm

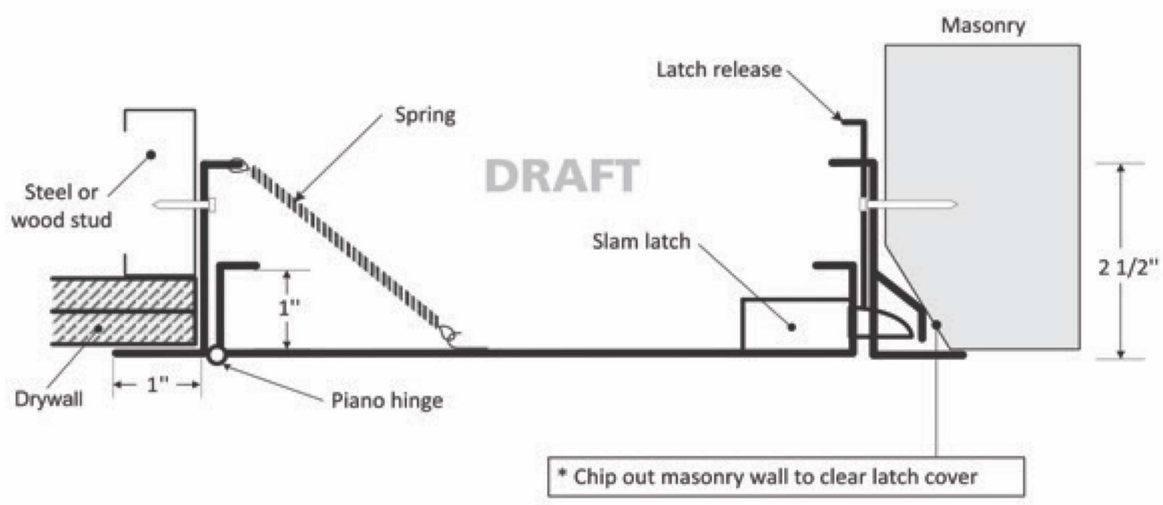

Authorities Having Jurisdiction (AHJ) should be consulted in all cases as to the particular requirements covering the installation and use of fire rated access doors.

Your odd sizes: Made in 5 days

www.**cendrex**.com

BUILDING MATERIALS

6/15/24 12:51 PM

G-STRUT®
& WIZARD® ACCESSORIES

STRUT CHANNEL FITTINGS AND ACCESSORIES

Available in six basic styles: solid, holes, oval slots, long slots, knock out, and back to back.

HOT-DIPPED PRE-GALVANIZING STRUT CHANNEL

With a zinc coating applied by hot-dipping the steel coil on Gregory's specialty continuous galvanizing line

- The channel is roll-formed, cut and/or punched as specified in conformance to ASTM 1011 for hot-rolled steel and ASTM 653 for hot-dipped pre-galvanizing, with a G-90 coating (0.90 ounces of zinc per square foot of steel)

PRODUCT NO.	GAUGE	DEPTH	LENGTH	MODIFIER
G5820S1EA	12	1-5/8"	10"	OVAL (HALF SLOT)
G5820S2	12	1-5/8"	20"	OVAL (HALF SLOT)
G1340S2EA	14	13/16"	20"	OVAL (HALF SLOT)
G5840S1	14	1-5/8"	10"	OVAL (HALF SLOT)

⚠ WARNING ⚠
Cancer Harm - **www.P65Warnings.ca.gov**

304 STAINLESS STEEL STRUT CHANNELS

PRODUCT NO.	DEPTH	LENGTH	MODIFIER
G5820S2SS	1-5/8"	20	HALF SLOT
G1340S1EA	13/16"	10	OVAL (HALF SLOT)

⚠ WARNING ⚠
Cancer Harm - **www.P65Warnings.ca.gov**

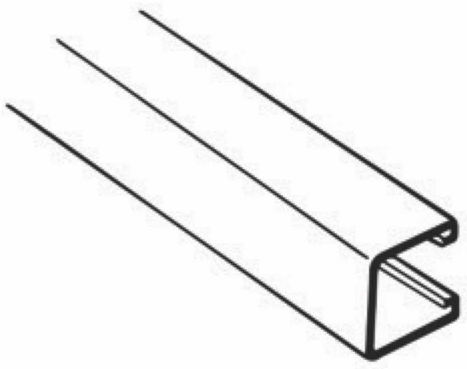

Solid
(No Perforation)

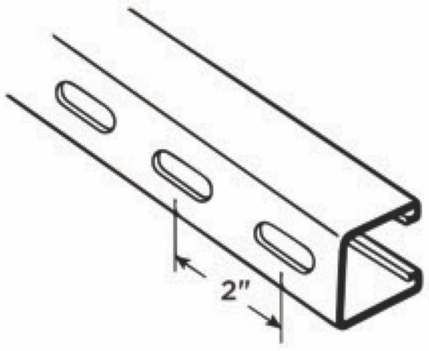

Oval Slot = OS
(9/16" X 1" – 2" On Center)

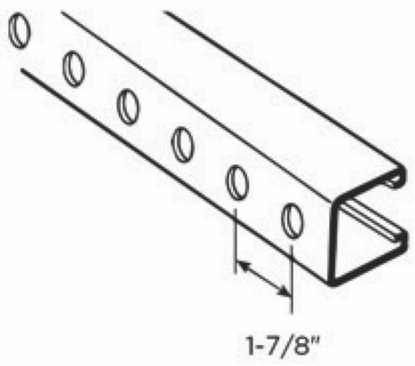

Hole = H
(9/16" Diameter - 1-7/8" On Center)

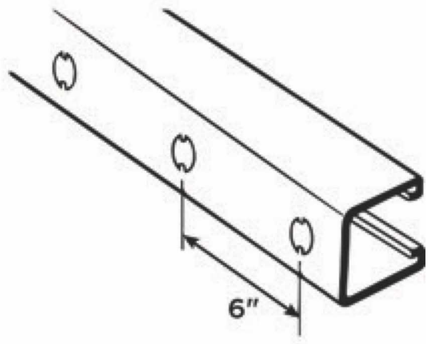

Knock Out = KO
(7/8" Diameter
6" On Center)

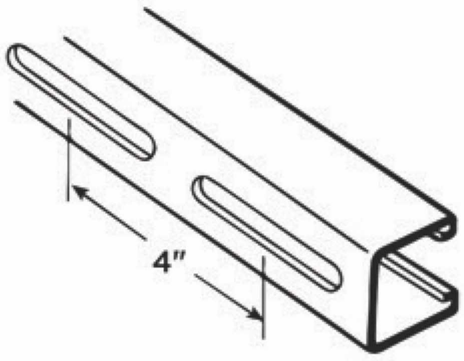

Long Slot = LS
(13/32" X 3" – 4" On Center)

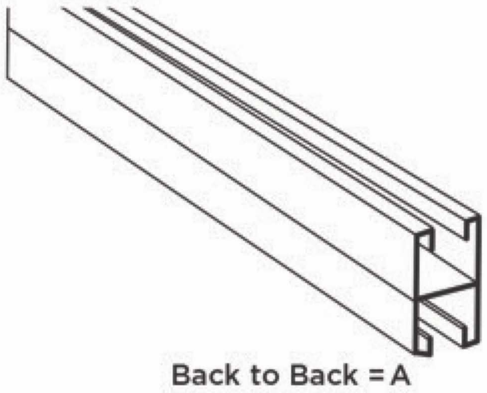

Back to Back = A
(Spot Welded, Avail.
with Perforation)

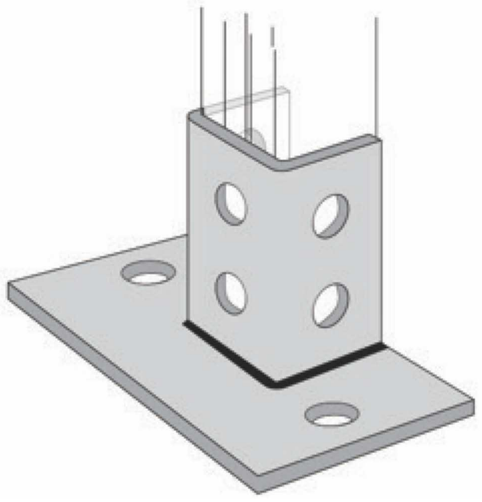

STANLEY_SUPPLY.indd 180-181

5 QUESTIONS TO ASK — WHEN SELECTING THE RIGHT G-STRUT® CHANNEL

1 GAUGE AND DEPTH

What minimum gauge (material thickness) and depth (profile size) are required for the job?

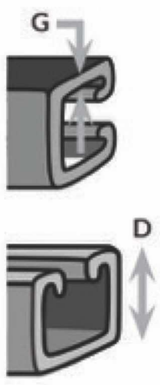

12 Gauge (.097)
- 1 5/8" x 13/16" D
- 1 5/8" x 7/8" D
- 1 5/8" x 1" D
- 1 5/8" x 1 3/8" D
- 1 5/8" x 1 5/8" D
- 1 5/8" x 2 7/16" D
- 1 5/8" x 3 1/4" D

14 Gauge (.071)
- 1 5/8" x 13/16" D
- 1 5/8" x 1 5/8" D

2 LENGTH

What channel length will best serve our end use?

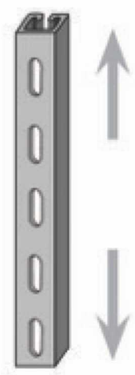

- **Standard 10'** (Shorter runs for easy handling)
- **Standard 20'** (Typical for longer runs)
- **6'8"** (Typical for commercial joists distance)
- **Custom manufactured-to-length** any size 4" to 24'

3 PERFORATION

What "hole pattern" (if any) will best serve the job function?

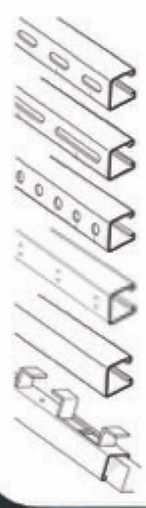

- **Oval Slot** (OS) (Half slot) [9/16" x 1 1/8" x 2" on ctr.]
- **Long Slot** (LS) (Elongated slot) [13/32" x 3" x 4" on ctr.]
- **Round Hole** (H) [9/16" Diam x 1 7/8" on ctr.]
- **Knock Out** (KO) [7/8" Diam x 6" on ctr.]
- **Solid** (No perforation)
- **Continuous concrete insert**

4 MATERIAL

What "substrate" will best serve the job function?

- **Steel** (Carbon steel, structural grade, 33,000 min yield)
- **Stainless steel** [Grade 304 or 316]
- **Aluminum**
- **Fiberglass**

5 FINISH

What type of finish or coating will best serve the construction?

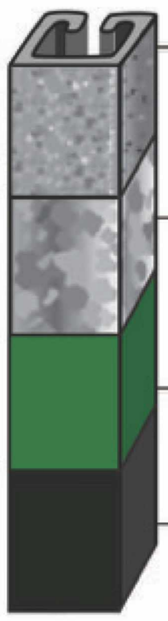

- **Pre-galvanized** (Continuous galvanized)
  - G90 zinc coating weight for cost-effective long-term galvanic and barrier corrosion protection
- **Hot-dipped galvanized**
  - (HDG – after fabrication, batch dip) where aqueous or exterior applications require greater corrosion protection
- **Powder coat (Green)**
  - Powder coated, heat cured, topical coating (custom colors also available)
- **PVC coated** (May PVC coat over plain or galvanized)
  - Heavy PVC coat for extended barrier protection or cosmetic effects

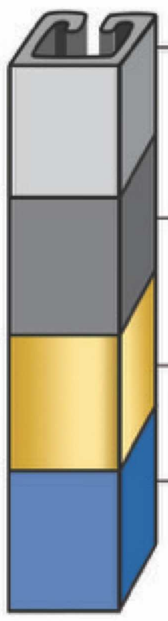

- **Galvannealed**
  - Paintable pre-galvanized material requires no pre-treatment. Easily spray or dry fall painted post-installation
- **Plain**
  - Untreated, "plain" steel with no topical/barrier coating
- **Yellow zinc (Gold)**
  - Yellow zinc electro galv.
- **PVC coated** (May PVC coat over plain or galvanized)
  - Heavy PVC coat for extended barrier protection or cosmetic effects

6/15/24 12:51 PM

STRUT FITTINGS

POST BASES & SPECIAL FITTINGS

Strut Pose Base
- Single, Double
- Low, High Profile
- Stainless, Poly Urethane

7-Hole Single Post Base Diagonal
8-Hole Single Post Base Diagonal
8-Hole Double Post Base
7-Hole Single Post Base
12-Hole Double Post Base
10-Hole Single Post Base

INSERTS & ENDCAPS

Continuous Concrete Inserts

CLEVIS FITTINGS

2-Hole Clevis Fitting
3-Hole Clevis Fitting
3-Hole Suspension Clevis Fitting
4-Hole Suspension Clevis Fitting

MISCELLANEOUS & SPECIAL FITTINGS

2-Hole Adjustable Corner Angle
2-Hole Adjustable Corner Angle
2-Hole Offset Angle
3-Hole Offset Bent Tee
5-Hole Offset Bent Tee
2-Hole Z-Angle
2-Hole Duct Angle
4-Hole Tapped Z-Angle
3-Hole Sheath Corner Connector
3-Hole Adjustable Z-Angle
8-Hole Double Wing Connector
9-Hole Triple Wing Connector
8-Hole Double Corner Connector

TROLLEYS

1 – 3 Holes
2 – 4 Bearings

"U" FITTINGS & BRACES

3-Hole U Support
3-Hole Splice Channel
4-Hole Splice Channel
2-Hole Splice Channel
Strut Brace

BRACKETS & SUPPORT SYSTEMS

6-Hole Stair Support
6-Hole Stair Support
Single Strut Flat Plate Brackets
3-Hole Wall Brackets
Down Open Strut Brackets
Make Your Own Single Bracket Supports
Make Your Own Double Bracket Supports
Up Open No Swivel Strut Bracket

ANGLE FITTINGS

1-Hole Corner Angle
2-Hole Corner Angle
2-Hole Offset Angle
2-Hole No-Twist Corner Angle
3-Hole Corner Angle
3-Hole Corner Angle
3-Hole Corner Shelf Angle
4-Hole Joint Connector Angle
4-Hole Duplex Corner Plate
4-Hole Corner Angle
5-Hole Corner Angle
5-Hole Joint Connector Angle
2-Hole Closed Angle
4-Hole Open Angle
2-Hole Open Angle
4-Hole Closed Angle
3-Hole Z-Angle

FLATPLATE FITTINGS

Square Washer
Non-Turn Square Washer
2-Hole Flat Plate Connector
4-Hole Splice Plate
4-Hole Splice Plate
3-Hole Splice Plate
3-Hole Splice Plate
2-Hole Swivel Plate
5-Hole Connector Plate
3-Hole Flat Angle Plate
3-Hole Corner Connector
3-Hole Corner Connector
4-Hole Tee Plate
4-Hole Corner Joiner Plate
5-Hole Cross Plate
4-Hole Connector Plate
4-Hole Corner Connector Plate
5-Hole Connector Plate
5-Hole Corner Connector Plate
7-Hole Connector Plate
6-Hole Tee Corner Connector
6-Hole Staggered Connector

WING FITTINGS

3-Hole Single Angle Connector
6-Hole Single Angle Connector
4-Hole Double Angle Connector
8-Hole Double Angle Connector
5-Hole Double Wing Connector
10-Hole Double Corner Connector
6-Hole Triple Wing Connector
12-Hole Triple Wing Connector
5-Hole Single Angle Connector
3-Hole Adjustable Z-Angle

HARDWARE SPRINGNUTS

No Spring
Short Spring
Regular Spring
Long Spring
Top Spring

CHANNELS PROFILES AND CUSTOM SIZES AVAILABLE

12 Gauge

7/8" | 1-3/8" | 1-5/8" | 2-7/16" | 3-1/4"

14 Gauge

13/16" | 1-5/8"

3-1/4" X 1-5/8" 12 Gauge Back to Back Strut
3-1/4" X 1-5/8" 12 Gauge Back to Side Strut
3-1/4" X 1-5/8" 12 Gauge Side to Side Strut

Strap Hinges

•Zinc Plated With Screws
•1 Pair per Card With Screw
•Standard Duty

Item#	Description	Pack
TUF86362	2"	12
TUF86363	3"	12
TUF86364	4"	12
TUF86365	5"	12
TUF86366	6"	12

•Extra Heavy Duty

Item#	Description	Pack
TUF86324	4"	4
TUF86325	5"	4
TUF86326	6"	2
TUF86328	8"	2

T-Hinges

•Zinc Plated With Screws
•1 Pair per Card With Screws

•Standard Duty

Item#	Description	Pack
TUF86252	2"	12
TUF86253	3"	12
TUF86254	4"	12
TUF86255	5"	12
TUF86256	6"	12

•Extra Heavy Duty

Item#	Description	Pack
TUF86284	4"	4
TUF86285	5"	4
TUF86286	6"	2
TUF86288	8"	2

•1 Pair per Box•Without Screws

Item#	Description	Pack
TUF86210BK	10"	1
TUF86212BK	12"	1

Weldable Hinges

•Bulk Pack•Sold per Piece
•Heavy Duty

Item#	Description	Pack
TUF86930	3" X 3"	12
TUF86935	3½" x 3½"	12
TUF86932	3½" x 2¼"	12
TUF86940	4" x 4"	12

•Extra Heavy Duty

Item#	Description	Pack
TUF86931	3" X 3"	12
TUF86936	3½" x 3½"	12
TUF86941	4" x 4"	12
TUF86960	6" x 6"	6

Butt Hinges

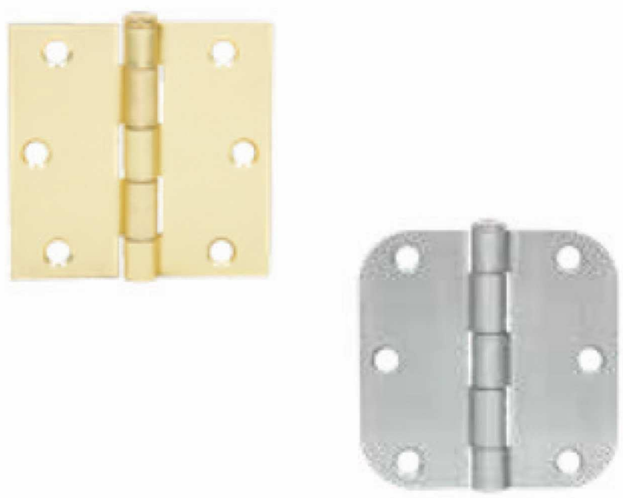

•1 Pair per Box•With Screws

Item#	Description	Pack
TUF86130	3" X 3" BP	25
TUF86135	3½" X 3½" BP	25
TUF86140	4" X 4" BP	25

•Round Corner•5/8" Radius

Item#	Description	Pack
TUF86130R58	3"x3" BP	5
TUF86135R58	3½"x3½" BP	25
TUF86140R58	4"x4" BP	5

•1 Pair per Box•With Screws

Item#	Description	Pack
TUF86130DC	3" X 3" 26D	5
TUF86135DC	3½" X 3½" 26D	5
TUF86140DC	4" X 4" 26D	5

•Round Corner•5/8" Radius

Item#	Description	Pack
TUF86130R58DC	3"x3" 26DC	5
TUF86135R58DC	3½"x3½" 26DC	5
TUF86140R58DC	4"x4" 26DC	5

Residential Spring Hinges

•1 Pair Per Box•Adjustable

Item#	Description	Pack
TUF86532	3½"x3½"	12
TUF86542	4x4	12

Bar Holders

•Zinc Plated

Item#	Description	Pack
TUF49254	Closed	10
TUF49255	Open	10

Steel Peg Board Hooks

•Zinc Plated•Bulk

Item#	Description	Pack
TUF11403	1/4" x 3"	50
TUF11406	1/4" x 6"	50
TUF11408	1/4" x 8"	50
TUF11411	1/4" x 11"	50
TUF11802	1/8" x 2"	50
TUF11804	1/8" x 4"	50
TUF11806	1/8" x 6"	50
TUF11808	1/8" x 8"	50
TUF11810	1/8" x 10"	50

Slotwall Hooks

•Bulk•Chrome Finish

Item#	Description	Pack
TUF11502	¼"x2"	50/500
TUF11504	¼"x4"	50/500
TUF11506	¼"x6"	50/500
TUF11508	¼"x8"	50/500
TUF11510	¼"x10"	50/500
TUF11512	¼"x12"	50/500

6/15/24 12:51 PM

Safety Hasps

•Carded With Screws

Item#	Description	Pack
TUF34515	1½" Brass Plated	12
TUF34520	2" Brass Plated	12
TUF34625	2½" Zinc Plated	12
TUF34635	3½" Zinc Plated	12
TUF34645	4½" Zinc Plated	12
TUF34660	6" Zinc Plated	12

Heavy Duty Safety Hasps

•Zinc Plated
•Carded With Screws

Item#	Description	Pack
TUF34335	3-1/2"	12
TUF34345	4-1/2"	12
TUF34360	6"	12

Single Hinged Hasp

•Zinc Plated•Carded With Wood Screws & Carriage Bolts & Nuts

Item#	Description	Pack
TUF12625	6-1/4"	6

Double Hinged Hasp

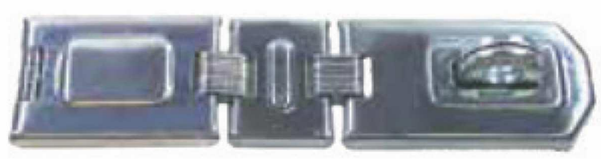

•Zinc Plated•Carded•With Wood Screws,Carriage Bolts & Nuts

Item#	Description	Pack
TUF12750	7-1/2"	6

Keyed Hasp

•Zinc Plated
•Carded With Screws

Item#	Description	Pack
TUF3425	4-1/2" KD	6
TUF3525	2½" KD	6

Hasp With 1¾" Laminated Padlock

•Zinc Plated
•Carded With Screws

Item#	Description	Pack
TUF3475	4-1/2"	6

Heavy Duty Straight Bar Hasp

•Carded•W/Mounting Hardware

Item#	Description	Pack
TUF12825	Zinc Plated	6

Heavy Duty 90° Angle Hasp

•Carded•W/Mounting Hardware

Item#	Description	Pack
TUF12850	Zinc Plated	6

Barrel Bolts

•Polished Brass Plated
•Carded With Screws

Item#	Description	Pack
TUF19020	2"	12
TUF19025	2-1/2"	12
TUF19030	3"	12
TUF19040	4"	12
TUF19050	5"	12
TUF19060	6"	12

•Dull Chrome
•Carded With Screws

Item#	Description	Pack
TUF19020DC	2"	12
TUF19025DC	2-1/2"	12
TUF19030DC	3"	12
TUF19040Dc	4"	12
TUF19050DC	5"	12
TUF19060DC	6"	12

Extra Heavy Duty Barrel Bolts

•Polished Brass Plated
•Carded With Screws

Item#	Description	Pack
TUF19052	2"	12
TUF19053	3"	12
TUF19054	4"	12
TUF19055	5"	12
TUF19056	6"	6

•Dull Chrome
•Carded With Screws

Item#	Description	Pack
TUF19052DC	2"	12
TUF19053DC	3"	12
TUF19054DC	4"	12
TUF19055DC	5"	12
TUF19056DC	6"	6

Extra Heavy Duty Steel Hasp

•Carded•W/Mounting Hardware

Item#	Description	Pack
TUF12535	Zinc Plated	6

STANLEY_SUPPLY.indd 184-185