G-STRUT®
& WIZARD® ACCESSORIES

STRUT CHANNEL FITTINGS AND ACCESSORIES

Available in six basic styles: solid, holes, oval slots, long slots, knock out, and back to back.

HOT-DIPPED PRE-GALVANIZING STRUT CHANNEL

With a zinc coating applied by hot-dipping the steel coil on Gregory's specialty continuous galvanizing line

- The channel is roll-formed, cut and/or punched as specified in conformance to ASTM 1011 for hot-rolled steel and ASTM 653 for hot-dipped pre-galvanizing, with a G-90 coating (0.90 ounces of zinc per square foot of steel)

PRODUCT NO.	GAUGE	DEPTH	LENGTH	MODIFIER
G5820S1EA	12	1-5/8"	10"	OVAL (HALF SLOT)
G5820S2	12	1-5/8"	20"	OVAL (HALF SLOT)
G1340S2EA	14	13/16"	20"	OVAL (HALF SLOT)
G5840S1	14	1-5/8"	10"	OVAL (HALF SLOT)

⚠ WARNING ⚠
Cancer Harm - **www.P65Warnings.ca.gov**

304 STAINLESS STEEL STRUT CHANNELS

PRODUCT NO.	DEPTH	LENGTH	MODIFIER
G5820S2SS	1-5/8"	20	HALF SLOT
G1340S1EA	13/16"	10	OVAL (HALF SLOT)

⚠ WARNING ⚠
Cancer Harm - **www.P65Warnings.ca.gov**

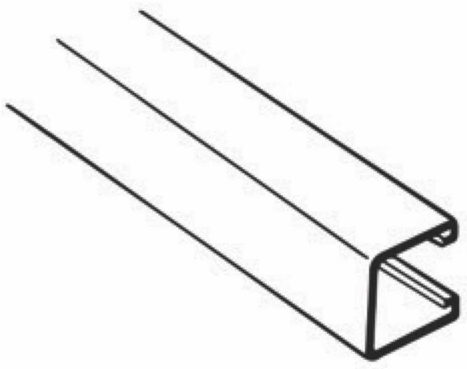

Solid
(No Perforation)

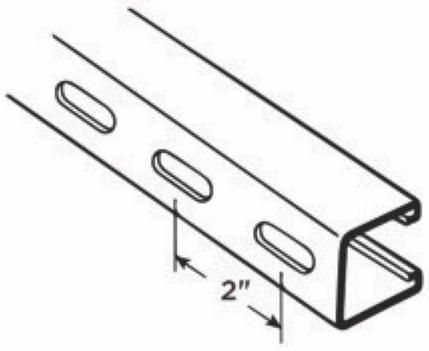

Oval Slot = OS
(9/16" X 1" – 2" On Center)

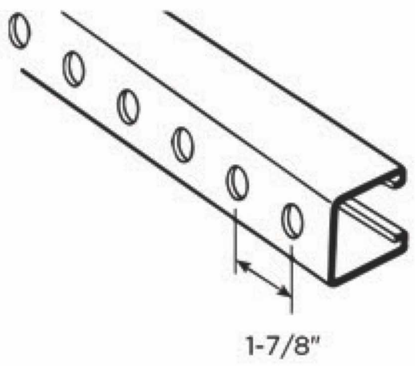

Hole = H
(9/16" Diameter - 1-7/8" On Center)

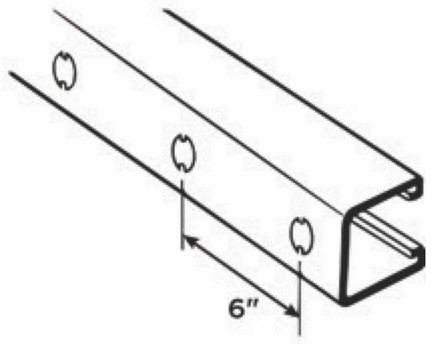

Knock Out = KO
(7/8" Diameter
6" On Center)

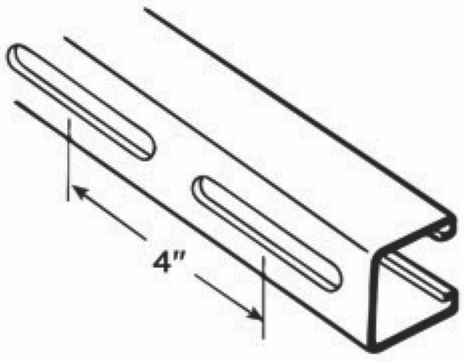

Long Slot = LS
(13/32" X 3" – 4" On Center)

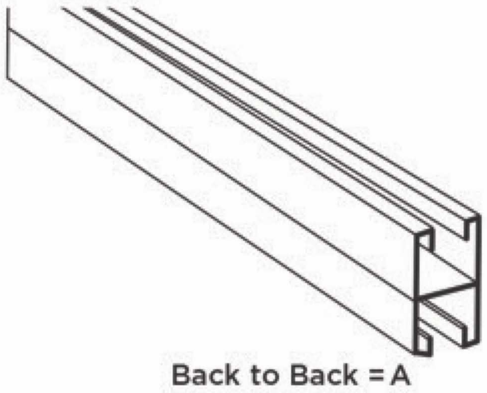

Back to Back = A
(Spot Welded, Avail.
with Perforation)

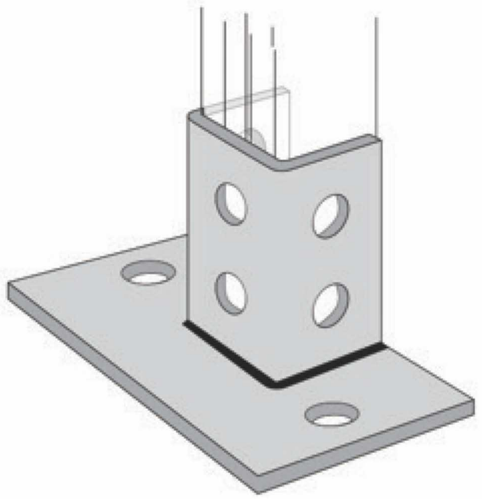

STANLEY_SUPPLY.indd 180-181