TOP FLANGE ITS HANGERS

SIMPSON Strong-Tie

Meets the unique needs of I-joists while offering superior performance and ease-of-installation

- Set a new standard for engineered wood top flange hangers
- Installs faster and uses fewer nails than any other EWP top flange hanger
- The new Strong-Grip™ seat and Funnel Flange™ features allow standard joist installation without requiring joist nails resulting in the lowest installed cost
- The Strong-Grip seat firmly secures I-joists with flange thicknesses from 1-1/8" to 1-1/2"
- 18 gauge

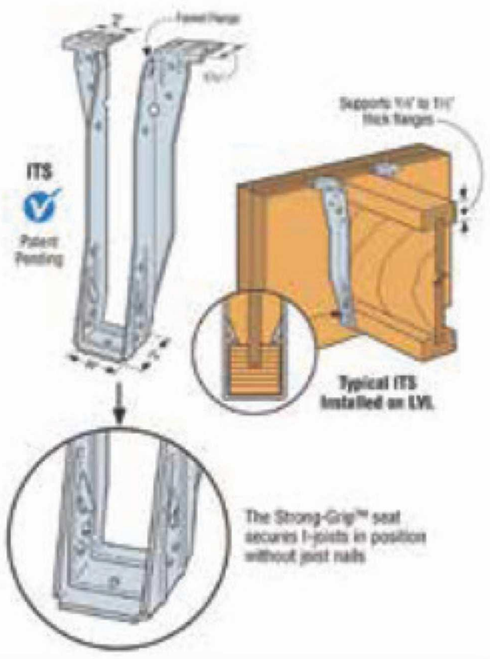

PRODUCT NO.	DESCRIPTION
ITS181188	1-7/8" X 11-13/16" X 2"
137ITS18114	1-7/8" X 14" X 2"
ITS206118	2-1/8" X 11-13/16" X 2"
ITS20614	2-1/8" X 13-15/16" X 2"
ITS23795	2-7/16" X 9-1/2" X 2"
ITS237118	2-7/18 X 11-13/16" X 2"
ITS23714	2-7/16" X 13-15/16" X 2"
ITS256118	2-5/8" X 11-3/16" X 2"
ITS25614	2-5/8" X 13-15/16" X 2"
ITS35614	3-5/8" X 13-15/16" X 2"
ITS356118	3-5/8" X 11-13/16" X 2"

TOP FLANGE TRUSS HANGER

SIMPSON Strong-Tie

Adjustable height

- Zinc galvanized finish containing 0.90 ounces of zinc per square foot of surface area (total both sides)

PRODUCT NO.	SIZE	GAUGE
THA218	1-5/8"W X 17-3/16"H X 5-1/2"C	18
THA422	3-5/8"W X 22"H X 7-7/8"C	16

SUR/SUL SKEWED 45° HANGERS

SIMPSON Strong-Tie

Hangers are skewed 45° left or right

- Angled nail slots direct nails for proper installation
- Galvanized finish
- 16 gauge

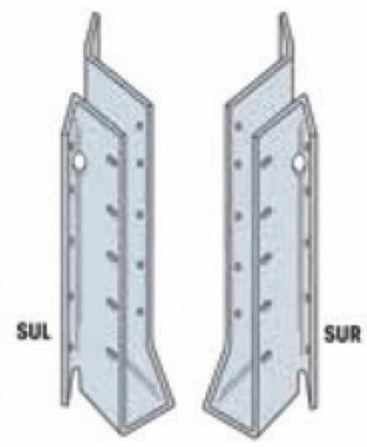

PRODUCT NO.	DESCRIPTION
SUL210	SUL210 SKEW LEFT 45DEG U HANGER
SUR210	SKEW RIGHT 45DEG U HANGER
SUL26	SUL26 SKEW LEFT 45° U HANGER
SUR26	SUL26 SKEW RIGHT 45° U HANGER

IUS I-JOIST HANGERS

SIMPSON Strong-Tie

Easier installation, higher loads, lower installed cost, than similar connectors

- Fully compatible with shallow flange I-joists
- Hybrid hanger with the advantages of the face mount and top mount hanger
- Fast installation with Strong-Grip™ seat, easy-to-reach face nails and self-jigging locator tabs
- 18 gauge

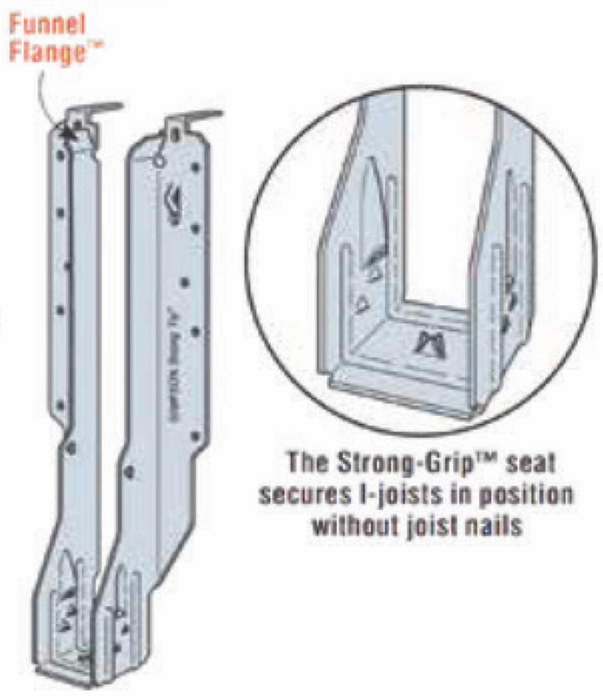

PRODUCT NO.	DESCRIPTION
IUS181118	1-7/8" X 11-13/16" X 2"
IUS18114	1-7/8" X 14" X 2"
IUS206118	2-1/8" X 11-7/8" X 2"
IUS20614	2-1/8" X 14" X 2"
IUS23795	2-7/16" X 9-1/2" X 2"
IUS237118	2-7/16" X 11-7/8" X 2"
IUS23714	2-7/16" X 14" X 2"
IUS256118	2-5/8" X 11-7/8" X 2"
IUS25614	2-5/8" X 14" X 2"

TRUSS HIP/JACK GIRDER HANGERS

SIMPSON Strong-Tie

14 gauge

- Zinc galvanized finish containing 0.90 ounces of zinc per square foot of surface area (total both sides)
- Use with 16d fasteners in the carrying member
- Use with 10d x 1-1/2" fasteners in the hip/jack
- The 137LTHJA26 is a lighter capacity, 18 gauge version of the 137THJA26

PRODUCT NO.	DESCRIPTION
THJA26	TRUSS HIP JACK GIRDER HANGER
LTHJA26	18GA TRUSS HIP JACK HANGER

GH TOP-FLANGE GIRDER HANGER

SIMPSON Strong-Tie

Girder-to-foundation wall connection

- 12-gauge steel construction
- May be skewed up to maximum 45° (bevel cut required)
- ICC-ES ESR-2616 and ESR-2523 compliant

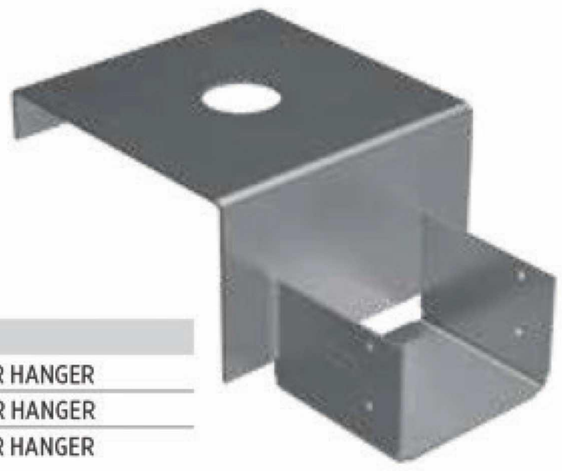

PRODUCT NO.	DESCRIPTION
GH468	GH46-8 GIRDER HANGER
GH466	GH46-6 GIRDER HANGER
GH488	GH48-8 GIRDER HANGER