nVent CADDY

Channel Clamps

Fig. 1 Global Part Number	Fig. 2 Global Part Number	Size	
		Wire or Rod	Lathers Channel
2B15LS	---	#8 Wire	1-1/2" Channel
4B15LS	4B15L	1/4" Plain Rod	1-1/2" Channel
4B2LS	---	1/4" Plain Rod	2" Channel

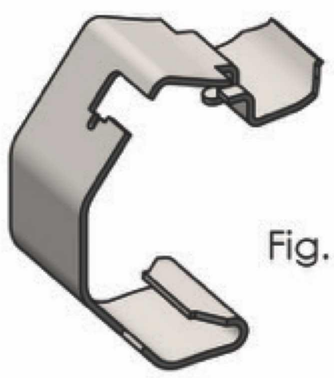

Fig. 1

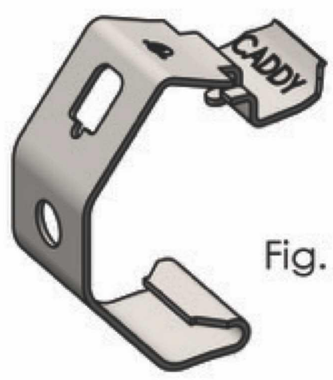

Fig. 2

Hammer-On Plain & Threaded Rod Hangers Beam Clamps

Features:

- Used to suspend #8 wire, 1/4", 3/8" plain rod or 1/4" or 3/8" threaded rod from beam flanges 1/8" to 3/4" thick
- Requires only hammer to install

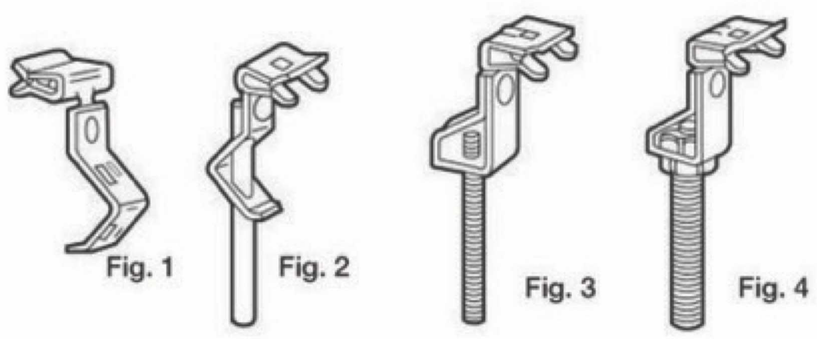

Fig. 1 Fig. 2 Fig. 3 Fig. 4

Sizing Chart

PART NO.	FIG. #	FLANGE THICKNESS	ROD SIZE
70824	1	1/8"-1/4"	#8 wire or 1/4" Plain Rod
70858	1	5/16"-1/2"	#8 wire or 1/4" Plain Rod
708912	1	9/16"-3/4"	#8 wire or 1/4" Plain Rod
6A24	2	1/8"-1/4"	3/8" (Plain)
6A58	2	5/16"-1/2"	3/8" (Plain)
6A912	2	9/16"-3/4"	3/8" (Plain)
4TI24	3	1/8"-1/4	1/4" Threaded
4TI58	3	5/16"- 1/2"	1/4" Threaded

Thread Install Rod Hanger

- Supports wire or rod from block or concrete walls

Material: Spring Steel
Finish: CADDY® ARMOUR

Part Number	Description	
4TI	1/4" Hole 1, Threaded, 1/4" Hole 2, Plain	100 pc
6T	3/8" Hole 1, Plain, 1/4" Hole 2, Plain	100 pc
6TI	3/8" Hole 1, Threaded, 1/4" Hole 2, Plain	100 pc

Hammer-On Flange Clip

nVent CADDY

Features:

- Locates a "portable" 1/4" hole with just a hammer
- Fits most beams & bulb tees

Fig. 1

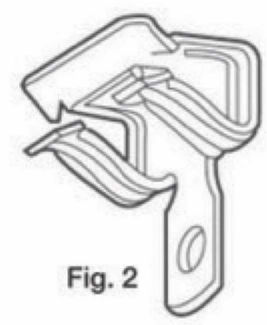

Fig. 2

Applications

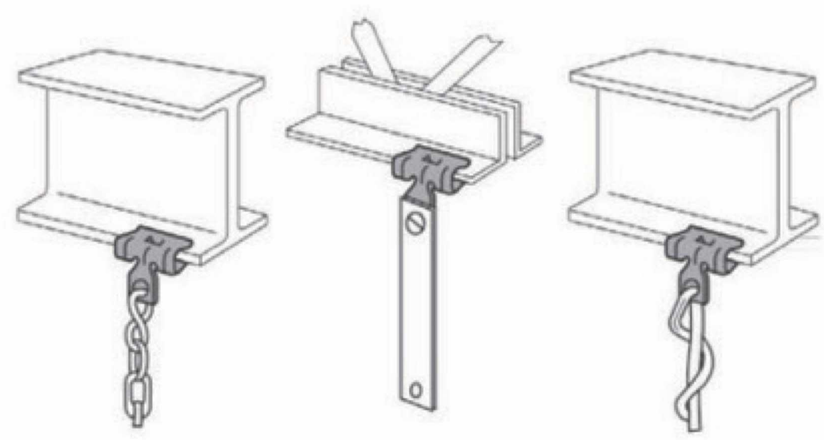

Sizing Chart

PART NO.	FIG. NO.	FLANGE THICKNESS	QTY PER BOX	STATIC LOAD LIMIT
2H4	1	3/32"-9/64"	100	160 lbs.
4H24	2	1/8"-1/4"	100	200 lbs.
4H58	2	5/16"-1/2"	100	200 lbs.
4H912	2	9/16"-3/4"	100	200 lbs.