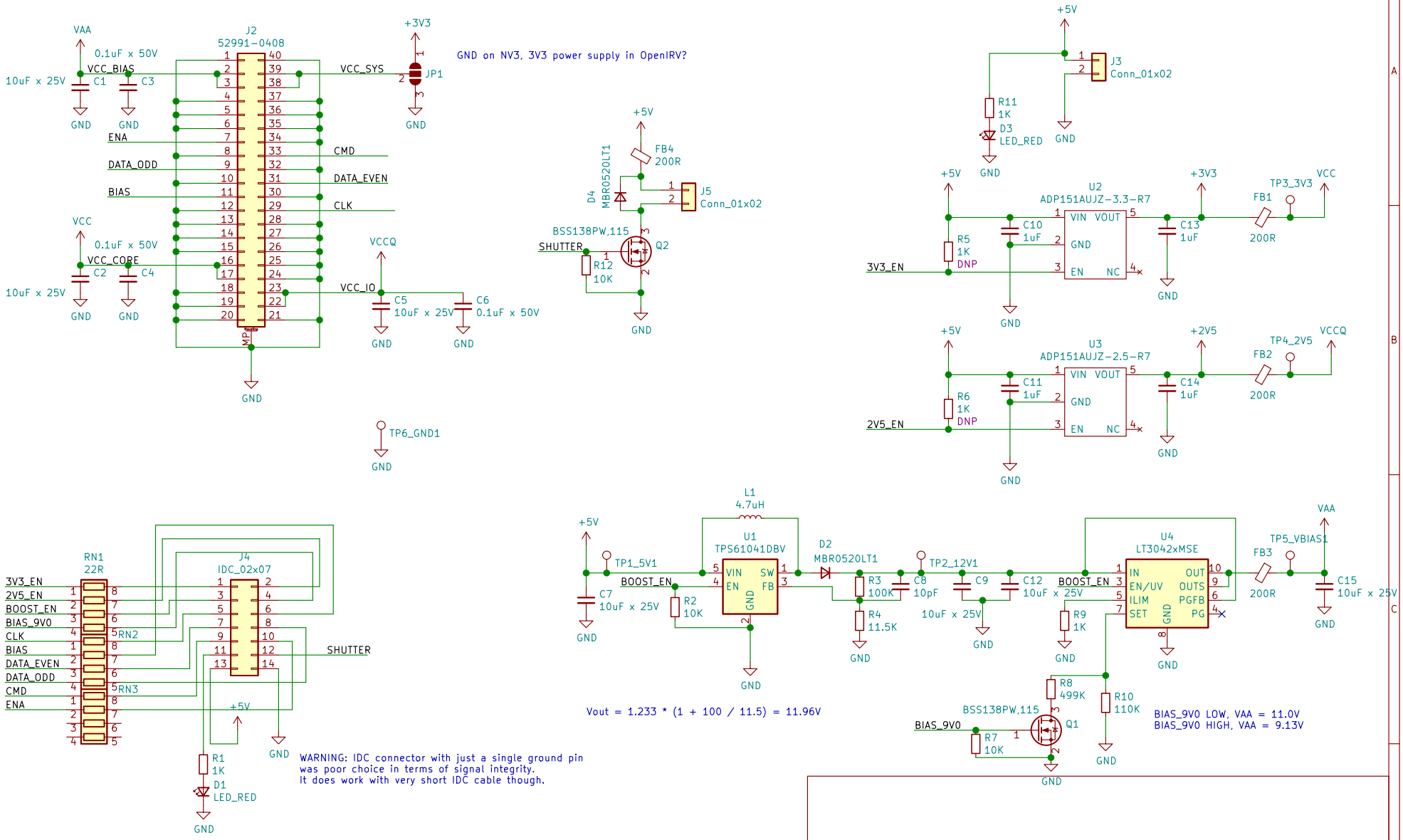

R. Veips

Sheet: /

File: isc0901b0-breakout.sch

Title: Autoliv NV3 / ISC0901B0 breakout

Size: A4	Date: 2021-04-19	**Rev: rev2**
KiCad E.D.A. kicad 5.1.10-88a1d61d5888ubuntu20.04.1		Id: 1/1