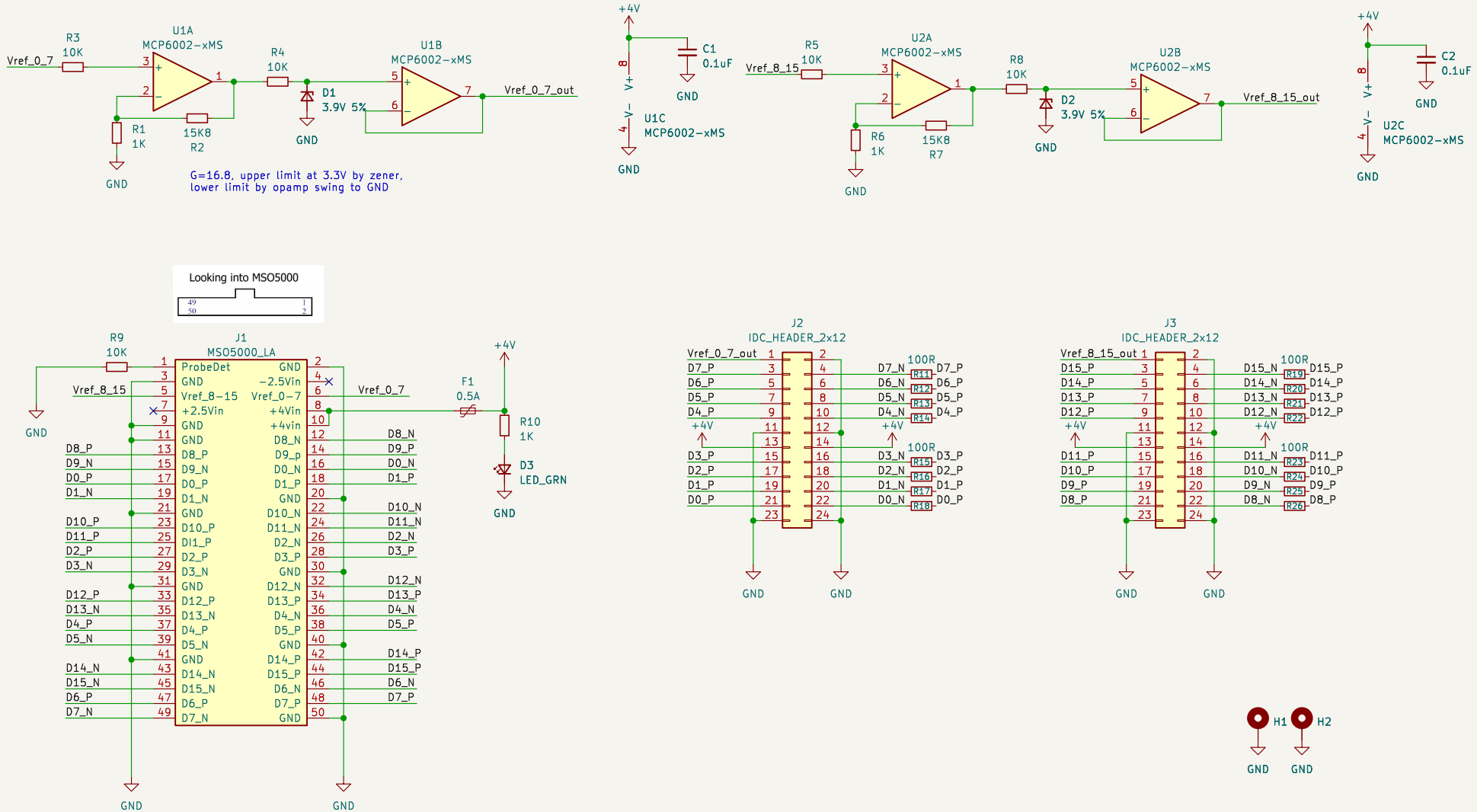

R. Veips

Sheet: /

File: connector-pcb.kicad_sch

Title: MSO5000 logic probe connector

Size: A4	Date: 2023-03-16	**Rev: r0**
KiCad E.D.A. kicad-cli 7.0.1		Id: 1/1