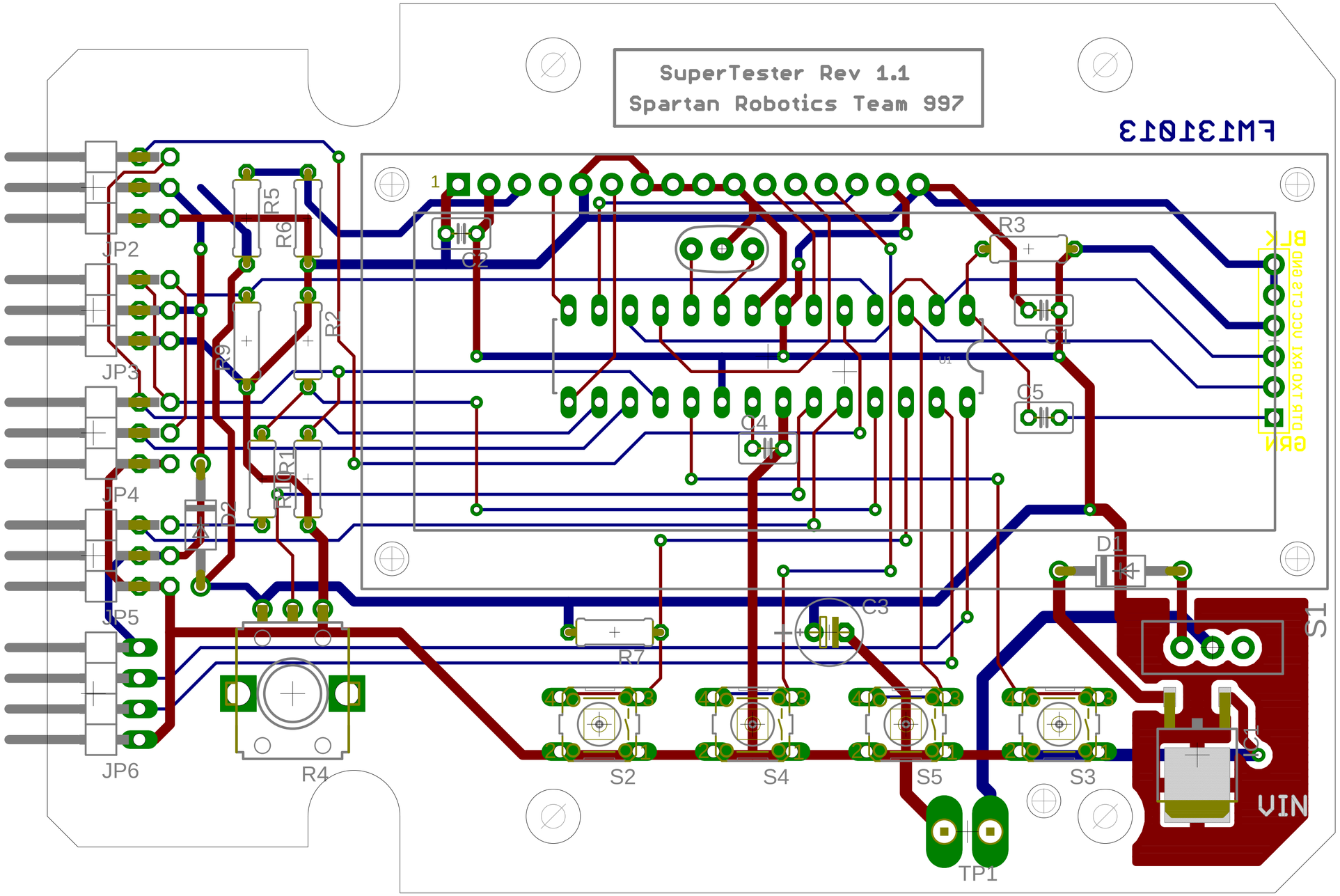
SuperTester Rev 1.1
Spartan Robotics Team 997
FM13101 3
JP2
JP3
JP4
JP5
JP6
R5
R6
R2
R3
R1
R7
R4
C2
C1
C4
C5
C3
D1
S1
S2
S4
S5
S3
TP1
VIN