Foxfab
POWER SOLUTIONS

PRODUCTION RELEASE FORM

GENERAL INFORMATION

Job No.:	J15776-03
Model No:	FFCC-P1-3000-V4-ALU-LZ-GENAP1-SPD-FUS
Catalog No:	FFCC-P1-3000-U4-G-ALU-LZ-GENAP1-SPD-FUS
Date:	1/20/2026
Job Name:	THR Forney Hospital

ELECTRICAL RATING INFORMATION

Voltage:	480Y/277 VAC
Current:	3000A RMS
PH/W/Hz:	3PH/4W/60Hz
SCCR:	65kA RMS SYM.

SPECIFICATION/APPROVAL INFORMATION

ETL/CUL/UL SPEC:	ETL 1008
E File #:	4011005(ETL)
Drawing No:	FFCC-P1-3000-U4-G-ALU-LZ-GENAP1-SPD-FUS
Drawn By:	BB
Approved By:	BB
File Compliance Mech:	GC
File Compliance Elec:	KB

DETAILED REQUIREMENTS

Camlock Configuration

M/F	M
Colours	U4 - BN/OR/YL/WH/GN
Qty (PH)	9
Qty (GND)	2
Lug Config	LZ

Enclosure Information

Size	78 x 60 x 38
Material	5052 Aluminum
Rating	Type 3R
Colour	ASA 61 GREY
Qty	1

OPTIONAL ACCESSORIES

			Specification
(AA)	X	Camlock Snap Covers	
(AC)	X	Heater with stat	550W
(AD)	X	Additional Outlets (Specify if GFCI)	QTY: 1 20A GFCI Receptacle, QTY: 1 30A L5-30R Twist-Locking Receptacle
(AE)		Key Interlock	
(AF)	X	Terminal Strip	
(AG)	X	Phase Sequence Relay	
(AH)		Power Meter	
(AI)		Micro-Switch	
(AJ)		Leg Stand Kit	
	X	Tranformer required?	SP50ACP

EQUIPMENT SPECIFICATION

FFCC-X2 (T)		Transfer switch	
FFCC-X2 (D)		Disconnect Switch	
FFCC-X3		Breaker(s)	
		Other	

NOTES & COMMENTS

2WSDS – Two Wire Start Contacts c/w Source Destination switch

SPD – Surge Protection Device

FUS - 3000A 3P Class L Fuses 65kA

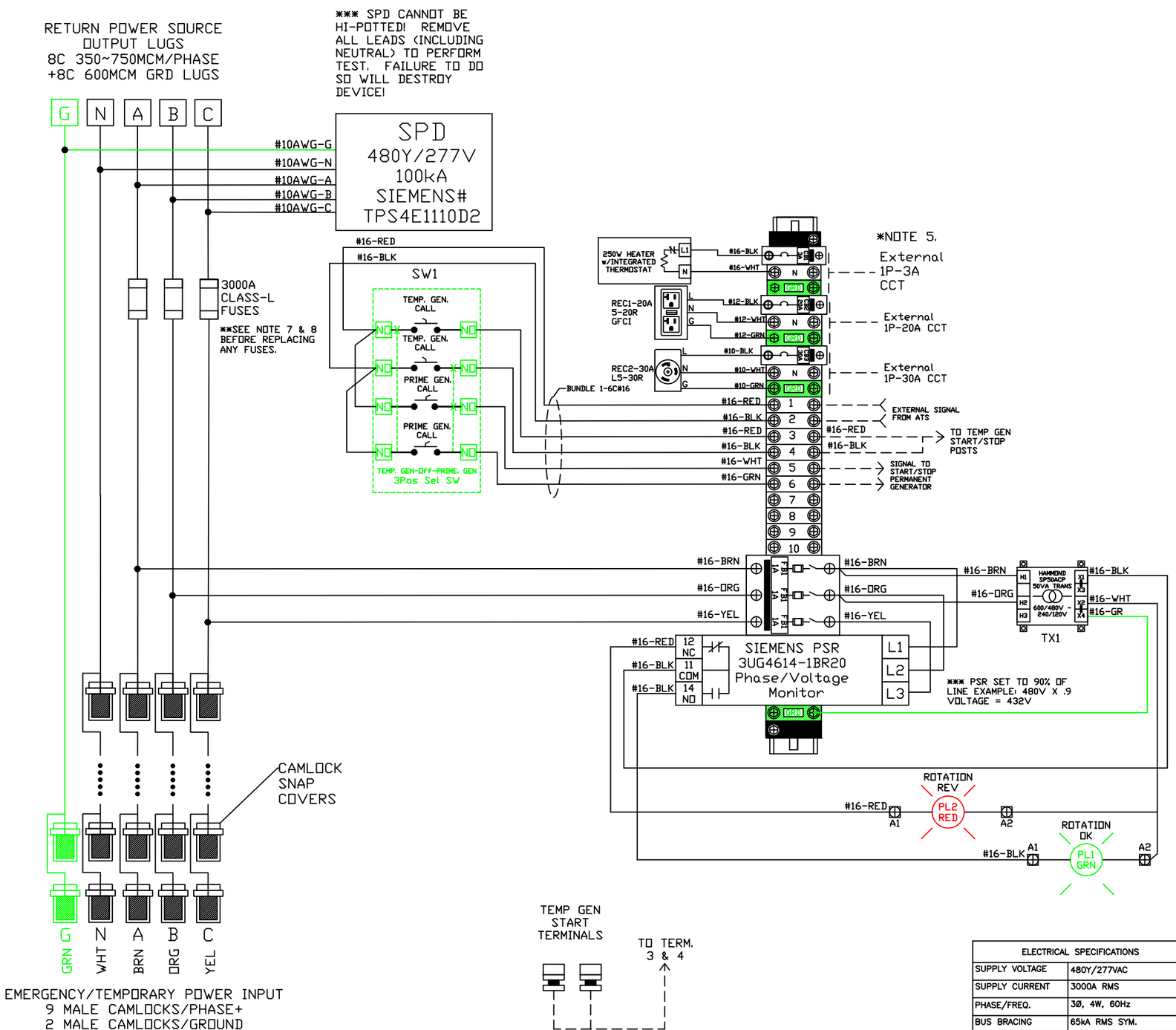

BILL OF MATERIALS					
REF.	MFR	P/N	DESCRIPTION	QTY	REV
CB1	SIEMENS	5SJ4110-7HG40	1P. 10A, 120V, RAIL MOUNTED BREAKER, UL489 LISTED	1	A
CB2	SIEMENS	5SJ4120-7HG40	1P. 20A, 120V, RAIL MOUNTED BREAKER, UL489	1	A
CB3	SIEMENS	5SJ4130-7HG40	1P. 30A, 120V, RAIL MOUNTED BREAKER, UL489	1	A
TRAN1	HAMMOND	SP50ACP	50VA, 600/480V - 240/120V CONTROL TRANSFORMER	1	A
REC1	LEVITON	GFNT2-W	1P, 20A, 5-20R, GFCI RECEPTACLE	1	A
REC2	LEVITON	2610	1P, 30A, L5-30R, TWIST-LOCK RECEPTACLE	1	A
HEAT1	STEGO	027009-01	550W, HEATER & BLOWER, INCLUDES ADJUSTABLE 5DEG C THERMOSTAT	1	A
PSR1	SIEMENS	3UG4614-1BR20	PHASE SEQUENCE RELAY, 160~690V, PROGRAMMABLE	1	A
FB1	MERSEN	USCC3 + 3x ATQR1	3P FUSE HOLDER, CC TYPE + 3 X 1A FUSES	1	A
PL1	SIEMENS	3SU1051-6AA40-0AA0, 3SU1401-1BH40-1AA0, 3SU1550-0AA10-0AA0	22mm GREEN PILOT LIGHT, LED, & HOLDER	1	A
PL2	SIEMENS	3SU1051-6AA20-0AA0, 3SU1401-1BH20-1AA0, 3SU1550-0AA10-0AA0	22mm RED PILOT LIGHT, LED, & HOLDER	1	A
SW1	SIEMENS	3SU1052-2BL60-0AA0	3-POSITION SELECTOR SWITCH	1	A
	SIEMENS	3SU1400-1AA10-1BA0	NO CONTACT	4	A
	SIEMENS	3SU1550-0AA10-0AA0	SELECTOR SWITCH HOLDER	1	A
POST	CIRC-TEST	375-591-10	TERMINAL POSTS (BANANA PLUGS AND/OR WIRE POST)	2	A
SNAP COVERS	MARINCO PP	CLL3RN-Z	CLEAR, HINGED CAMLOCK SNAP COVERS	38	A
SPD	SIEMENS	TPS4E1110D2	SPD, 100kA, 480Y/277V, 3PH, 4W, TYPE 2 SPD, INTERNALLY PROTECTED	1	A
FU1/2/3	MERSEN	A4BY3000	3P-3000A, CLASS-L TIME DELAY POWER FUSE	3	A

NOTES

1. 3PH, 4W SYSTEM.
2. NEUTRAL IS ISOLATED FROM GROUND
3. GROUND IS BONDED TO CAMPLATE
4. PHASE SEQUENCE RELAY PROGRAMMED TO 90% OF LINE VOLTAGE (432V). FIELD ADJUSTABLE.
5. 550W HEATER, REC1, AND REC2 REQUIRE SEPARATE 120V EXTERNAL SOURCES.
6. 3X 3000A CLASS-L POWER FUSES INCLUDED IN SCOPE OF SUPPLY.
7. ENSURE POTABLE GENERATOR IS IN THE "OFF" POSITION BEFORE SERVICING POWER FUSES.
8. ENSURE ALL POWER CIRCUITS AND POWER FUSES ARE DE-ENERGIZED PRIOR TO ANY SERVICING.
9. NOT SUITABLE FOR SERVICE ENTRANCE APPLICATIONS.
10. PROTECTIVE HINGED COVERS INSTALLED ON ALL PANEL MOUNTED CAMLOCK CONNECTORS
11. ETL 1008 LISTED.

ELECTRICAL SPECIFICATIONS	
SUPPLY VOLTAGE	480Y/277VAC
SUPPLY CURRENT	3000A RMS
PHASE/FREQ.	3Ø, 4W, 60Hz
BUS BRACING	65kA RMS SYM.
ASSEMBLY SCCR	65kA RMS SYM.
TEMP GEN CAMLOCK SCCR	35kA RMS SYM.
ENCL. RATING	TYPE 3R
CERTIFICATIONS	ETL 1008

PROPRIETARY AND CONFIDENTIAL

THE INFORMATION CONTAINED IN THIS DRAWING IS THE SOLE PROPERTY OF FOXFAB METAL WORKS ANY REPRODUCTION IN PART OR AS A WHOLE WITHOUT THE WRITTEN PERMISSION OF FOXFAB METAL WORKS IS PROHIBITED.

DRAWN BY: AC
CREATED ON: 2025-06-23

UNLESS OTHERWISE SPECIFIED:
DIMENSIONS ARE IN INCHES
TOLERANCES:
X ±1 XX ±.5
X.XX ±.1 XXX ±.1
ANGULAR ±1.5
INTERPRET DIM AND TOL. PER: ASME Y14.5
THIRD ANGLE:

FOXFAB POWER SOLUTIONS
1579 - 188 ST. SURREY, B.C. V3Z 1A1
TEL: 604-460-9310 FAX: 604-460-9317
WWW.FOXFAB.COM

TITLE:
J15776 - THR FORNEY HOSPITAL
FFCC-P1-3000-U4-G-ALU-LZ-GENAP1-SPD-FUS

SIZE B | SCALE NTS | SHEET 1 OF 1 | REV 1.4

REVISION				
REV.	ZONE	DESCRIPTION	DATE	DRAWNBY
A		LAYOUT DRAWINGS - INITIAL RELEASE	2025-05-07	A. SINGH

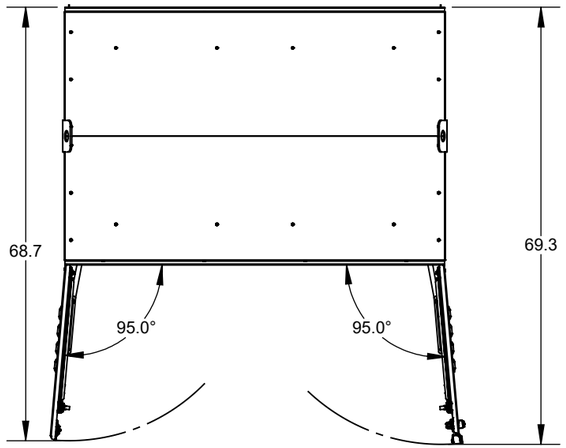

TOP VIEW OPEN

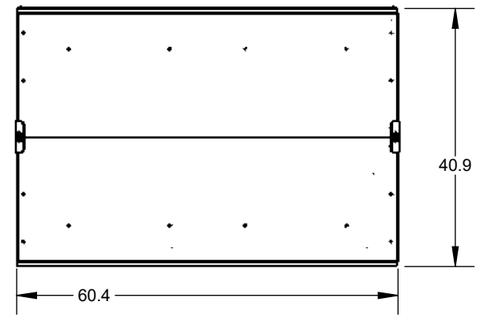

TOP VIEW CLOSED

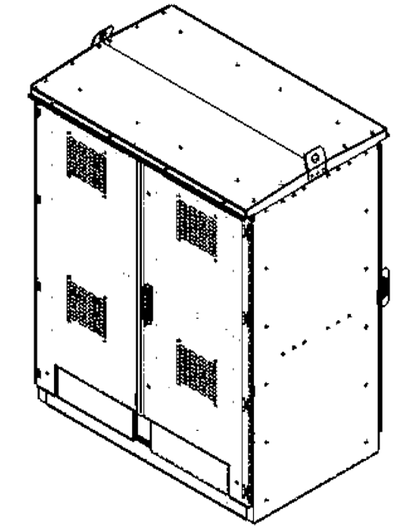

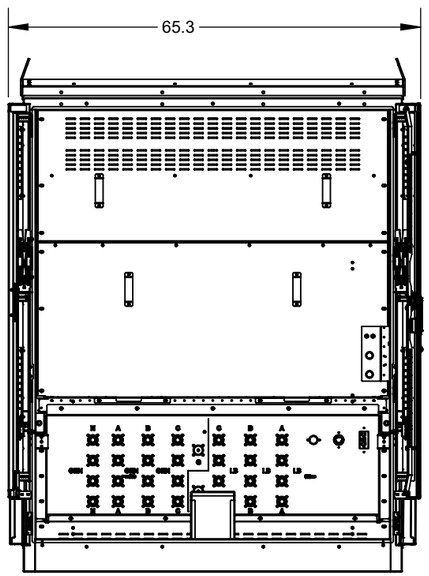

FRONT VIEW OPEN

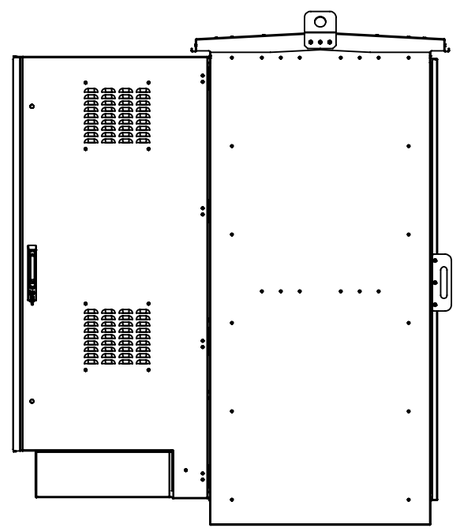

SIDE VIEW OPEN

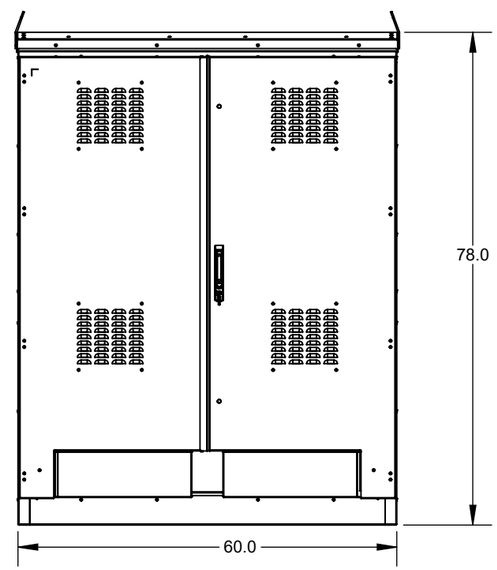

FRONT VIEW CLOSED

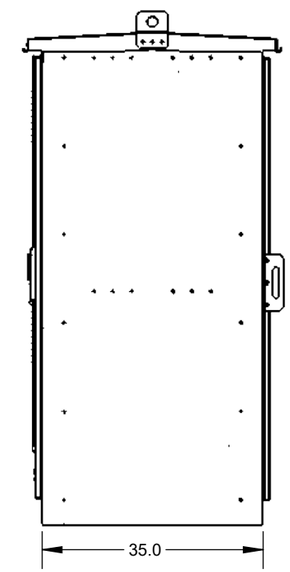

SIDE VIEW CLOSED

ENCLOSURE DETAILS (DIMENSION IN INCHES)	
HEIGHT	78"
WIDTH	60"
DEPTH	
DEPTH WITH DOOR OPEN	70" (MAX)
MOUNTING POINTS (SLOTS)	4 x .875" x 1.625" (POSITION 31.5" x 53")

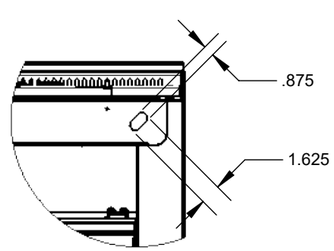

DETAIL B
SCALE 1 : 12

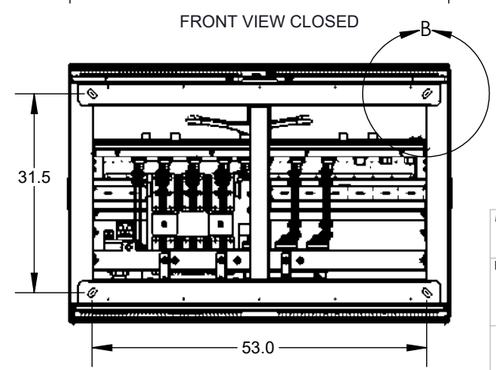

BOTTOM VIEW CLOSED

NOTE:
DIMENSIONS PROVIDED HEREIN ARE FOR REFERENCE ONLY

MATERIAL lbs
PER NOTES SEE DWGS

FINISH
PC PER NOTESSEE DWGS

PROPRIETARY AND CONFIDENTIAL

THE INFORMATION CONTAINED IN THIS DRAWING IS THE SOLE PROPERTY OF FOXFAB POWER SOLUTIONS ANY REPRODUCTION IN PART OR AS A WHOLE WITHOUT THE WRITTEN PERMISSION OF FOXFAB POWER SOLUTIONS IS PROHIBITED.

DRAWN BY: GC
SAVED ON: 2025-05-07
BD: -
TOP DIE: -
BOTTOM DIE: -

UNLESS OTHERWISE SPECIFIED:
DIMENSIONS ARE IN INCHES
TOLERANCES:
X ± .2
X.X ± .5
X.XX ± .2
X.XXX ± .1
ANGULAR ± 1.5
INTERPRET DIM AND TOL. PER:
ASME Y14.5

Foxfab Power Solutions
2579-188 ST.
SURREY, BC V3Z 2A1
(604) 460 - 9310
WWW.FOXFAB.COM

TITLE:
FFCC-P1-3000-U4-G-ALU-LA-GENAP1-SPD-FUS

THIRD ANGLE: SIZE **B** SCALE 1:24 REV A

ITEM NO. S212 DWG. NO. PM-DPMTS3200 SHEET 1 OF 2